THIS DRAWING IS EXCLUSIVE PROPERTY OF "S3M DESIGN CONSULTANTS LLP"
AND SHOULD NOT BE USED,COPIED,REPRODUCED AND EXHIBITED IN ANY WAY DETRIMENTAL TO OUR INTEREST WITHOUT OUR WRITTEN CONSENT.

GENERAL NOTES :

1. ALL DIMENSIONS ARE IN mm. & LEVELS ARE IN METER.
2. FOR ALL OTHER DETAILS REFER DRAWING NO. 02.SR.07 & 02.SR.07a.
3. FOR ALL OTHER NOTES REFER DRAWING NO. GNS.01.

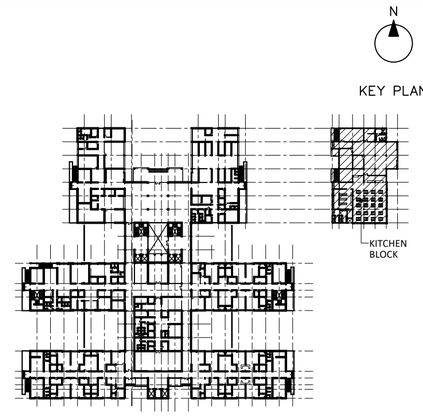

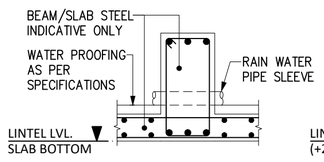

TYP. PIPE SLEEVE DETAIL
SCALE 1:25

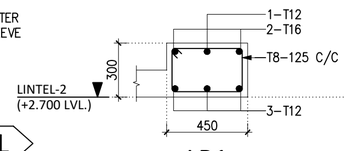

LB1

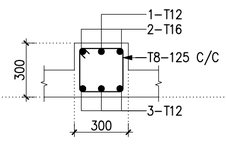

LB2

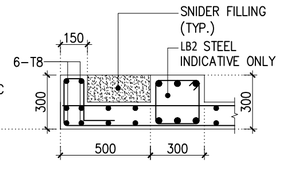

SECT- B
SCALE 1:25

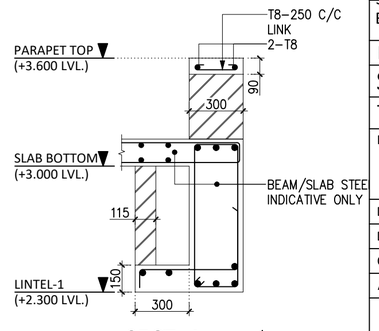

SECT- A
SCALE 1:25

REV NO.	DESCRIPTION	DATE	DRAWN	CHECKED
R3	REVISED AS PER ARCH. DRAWING	28-02-19	ROHIT	ROSHAN
R2	REVISED AS PER ARCH. DRAWING	27-02-19	ROHIT	ROSHAN
R1	REVISED AS PER ARCH. DRAWING	22-02-19	ROHIT	ROSHAN

REF. DRGS. :

01. ARCHITECTURAL :	R4
02. STRUCTURAL :	02.SR.07 & 02.SR.07a
03. HVAC :	-----
04. ELECTRICAL :	-----
05. UTILITIES :	-----

ASSOCIATES :

ELECTRICAL ---	FIRE SAFETY ---
MECH. UTILITIES ---	HVAC ---

STRU. LAYOUT AT LINTEL (+2.700), SLAB 1 BOTTOM (+3.000) & SLAB-2 BOTTOM (+4.500) LVL.

KITCHEN BLOCK

SECONDARY PAEDIATRIC CARE CENTER

TORNASCENT CARE INSTITUTE , SURAT

PROJECT NO:	DRAWING NUMBER :		REVISION
1837	02.SR.06		R3
DRAWN	ROHIT	SCALE 1:150, 1:25	CONSTRUCTION C
DESIGNED	ROSHAN		
CHECKED	RUTUL	DATE : 20-02-2019	A2
APPROVED	R.H.S		

S3M ENGINEERING + PLANNING
S3M DESIGN CONSULTANTS LLP
B-801, WESTGATE, NEAR YMCA CLUB, S G HIGHWAY, AHMEDABAD-1
PHONE: +91 (079) 66118122/66118123
W: www.s3mconsultants.com E: s3m@s3mconsultants.com