FOOTING SCHEDULE

FOOTING NUMBERS	COLUMN NUMBERS	FOOTING TYPE	FOOTING DIMENSION			FOOTING REINFORCEMENT				SFR	REMARKS
						BOTTOM		TOP			
			L	B	D	ALONG B	ALONG L	ALONG B	ALONG L		
FP84	PC72	Pad	4500	2550	1175	T16@115 C/C	T16@115 C/C	-	-	T10@200 C/C	-
FC3	PC154,PC155	Pad	4750	2350	1250	T16@125 C/C	T20@100 C/C	T16@125 C/C	T16@125 C/C	T10@200 C/C	-
FC4	PC156	Pad	3400	2550	1150	T20@150 C/C	T25@150 C/C	T10@200 C/C	T10@200 C/C	T10@200 C/C	-
FC5	PC160,PC161,..PC162	Pad	4950	2550	1300	T16@125 C/C	T20@100 C/C	T16@125 C/C	T16@125 C/C	T10@200 C/C	-
FC6	PC163,PC164	Pad	3100	2650	1200	T16@125 C/C	T20@125 C/C	T16@125 C/C	T16@125 C/C	T10@200 C/C	-
FC7	PC40A,PC43A	Pad	2800	1500	950	T16@150 C/C	T16@100 C/C	T16@150 C/C	T16@150 C/C	-	-
FC8	PC39A,PC42A	Pad	2800	1500	950	T12@200 C/C	T20@115 C/C	T12@100 C/C	T12@100 C/C	-	-
FC13	PC39,PC42	Pad	2700	1850	950	T12@175 C/C	T20@125 C/C	T12@100 C/C	T12@100 C/C	-	-
FC15	PC8,PC9	Pad	4300	2150	1000	T20@175 C/C	T25@150 C/C	T16@150 C/C	T16@150 C/C	T10@200 C/C	-
FC16	PC11,PC13,PC14	Pad	4450	2650	1100	T20@150 C/C	T20@115 C/C	T16@150 C/C	T16@150 C/C	T10@200 C/C	-
FC17	PC10,PC12	Pad	4450	2800	1500	T20@115 C/C	T16@100 C/C	T16@100 C/C	T16@100 C/C	T10@200 C/C	-
FC18	PC165,PC166	Pad	4950	2550	1350	T20@150 C/C	T20@100 C/C	T16@115 C/C	T16@115 C/C	T10@200 C/C	-
FC19	PC167	Pad	3400	2550	1100	T16@125 C/C	T20@100 C/C	T10@200 C/C	T10@200 C/C	T10@200 C/C	-
FC20	PC40,PC41,PC43	Pad	4950	3400	1550	T20@125 C/C	T20@100 C/C	T16@100 C/C	T16@100 C/C	T10@200 C/C	-
FC21	PC16, PC17	Pad	4300	2150	1000	T20@175 C/C	T25@150 C/C	T16@150 C/C	T16@150 C/C	T10@200 C/C	-
FC22	PC15	Pad	4200	2800	1200	T20@100 C/C	T20@125 C/C	T10@200 C/C	T10@200 C/C	T10@200 C/C	-
FC23	PC7	Pad	4200	2800	1200	T20@115 C/C	T20@125 C/C	T10@200 C/C	T10@200 C/C	T10@200 C/C	-

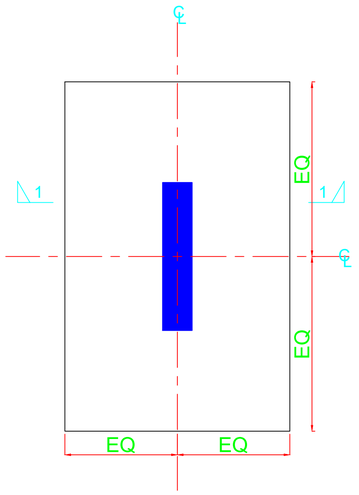

TYPICAL PLAN OF ISOLATED FOOTING WITH TOP REINFORCEMENT
SCALE 1:100

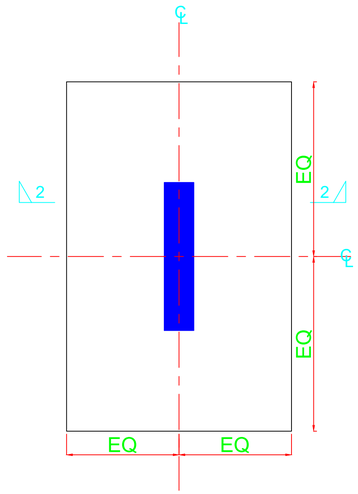

TYPICAL PLAN OF ISOLATED FOOTING WITHOUT TOP REINFORCEMENT
SCALE 1:100

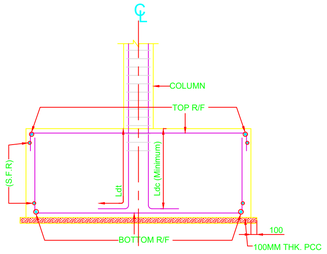

SECTION 1-1
SCALE 1:50

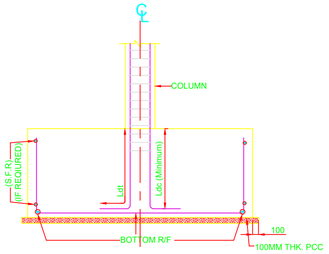

SECTION 2-2
SCALE 1:50

PROVISION :-
LOWER GROUND + GROUND + PD1 TO PD6
+ECO DECK + TERRACE + ROOF

NOTES:
1 READ THIS DRAWING WITH RELEVANT ARCHITECTURAL DRAWINGS
2) IN CASE OF ANY DISCREPANCY KINDLY CONTACT THE DESIGN ENGINEER.
3) REINFORCEMENT GRADE :
FE500 : T8 & T10
FE550D : T12 & ABOVE
4) CONCRETE GRADE
RETAINING WALL: M40
FOOTING: M30
(ONE GRADE HIGHER TO BE POURED THAN MENTIONED ABOVE)
5) COVER :
RETAINING WALLS : 50MM
FOOTING : 75MM
6) Ldt : 40DIA (FOR M40 - RETAINING WALLS)
50DIA (FOR M30 - FOUNDATION)
7) REFER GENERAL DETAIL NOTES & DRAWINGS

KEY PLAN:

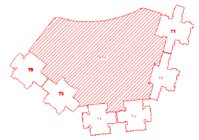

GENERAL NOTES:
1. THIS DRAWING IS THE COPYRIGHT OF GODREJ PROPERTIES LTD. AND MUST NOT BE RETAINED, COPIED OR USED WITHOUT THE ABOVE CONSULTANT'S AUTHORITY.
2. DO NOT SCALE FROM THE DRAWINGS.
3. ALL DIMENSIONS ARE IN MILLIMETERS AND LEVELS IN METRES UNLESS NOTED OTHERWISE, ALL DIMENSIONS TO BE VERIFIED ON SITE & APPROVED BY THE ENGINEER.
4. THIS DRAWING SHOULD BE CONFIRMED FROM CONTRACTORS.

DRAWING REVISIONS:

No.	Description	Date
R1	UPDATED AS PER MEP REQUIREMENT	26/12/2024
R2	UPDATED	04/01/2025
R3	UPDATED	24/01/2025

CLIENT :
GODREJ PROPERTIES LTD. | PROPERTIES

ARCHITECTURAL CONSULTANT :
KAPADIA & ASSOCIATED PVT. LTD.

MEPF CONSULTANT :
AEON Integrated Building Design Consultants LLP

LANDSCAPE CONSULTANT:

STRUCTURAL CONSULTANT :
Gokani Consultants and Engineers LLP
801 Quantum Tower, Rambaug Lane,
off S.V.Road, Chincholi, Malad (West),
Mumbai 400 064, India. T: +91 22 2888 4400
ww.gokaniconsultants.com
email : info@gokaniconsultants.com

BIM CONSULTANT :

PROJECT TITLE:
Godrej - Big Bull

NORTH:

DRAWING TITLE:
FOOTING SCHEDULE & TYPICAL PLAN, SECTION OF ISOLATED FOOTING (NON TOWER AREA).

PROJECT CODE:	PHASE:	SCALE:	DATE:
		@A1	26/12/2024
DRAWN BY:	**DESIGNED BY:**	**CHECKED BY:**	**APPROVED BY:**
AV	SG	SB	VG

STAMP, SIGN & DATE:

STRUCTURAL CONSULTANT:	MEPF CONSULTANT :	LANDSCAPE CONSULTANT:	ARCHITECTURAL CONSULTANT:

ISSUED FOR: ☐ CONCEPT ☐ APPROVAL ☐ SD ☐ TENDER ☐ DD ☐ SHOP DRAWING ■ GFC ☐ AS-BUILT

DRAWING NUMBER:
GPL_BBL-NTA-B2-ST-210
GOKANI DRAWING NUMBER:
948-NTA-FD-11-R3

REVISION:
R3