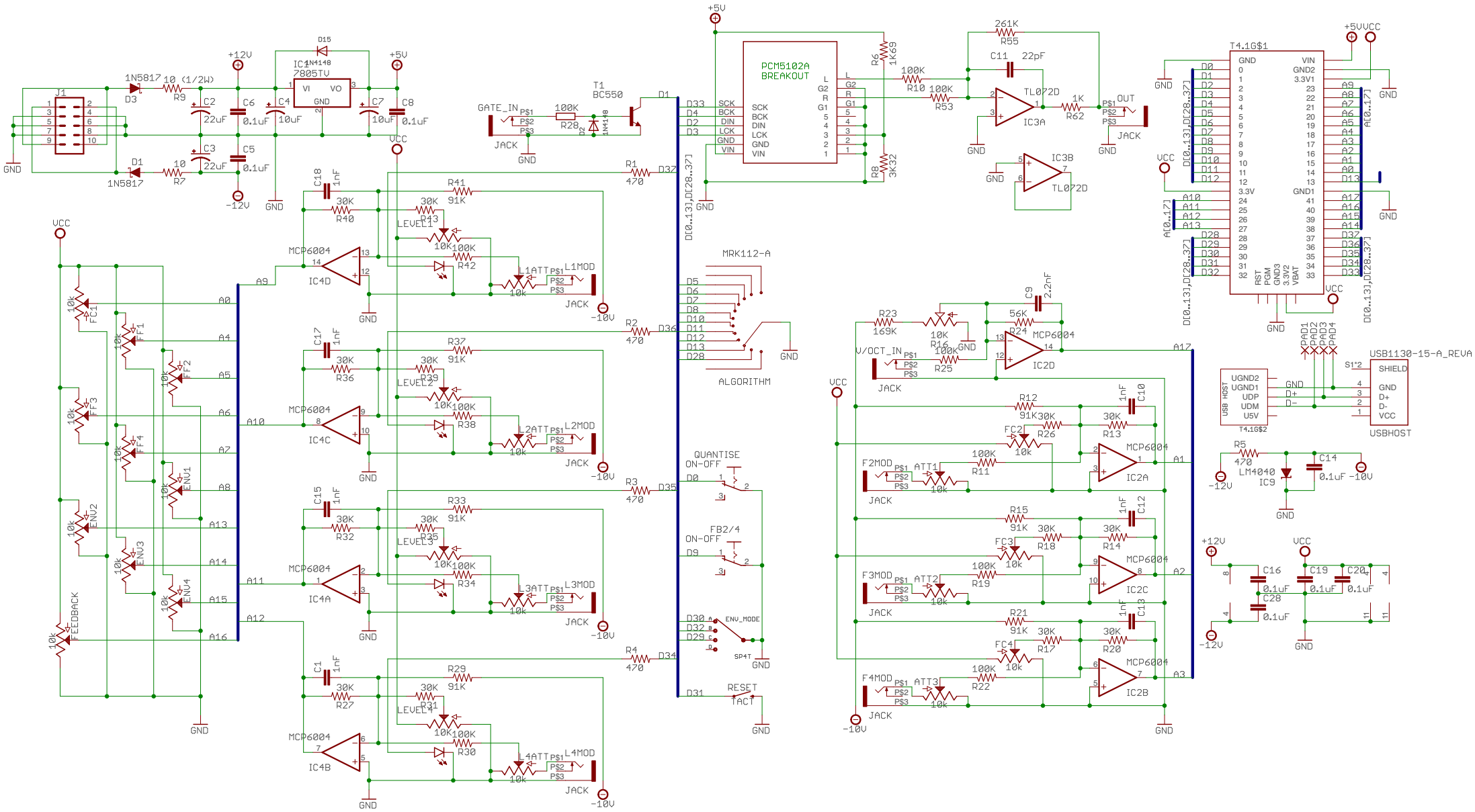

24/7/22 10:49 AM f=0.73 /Users/ken/Workspace/eagle/FM/FM-1.2.1.sch (Sheet: 1/1)