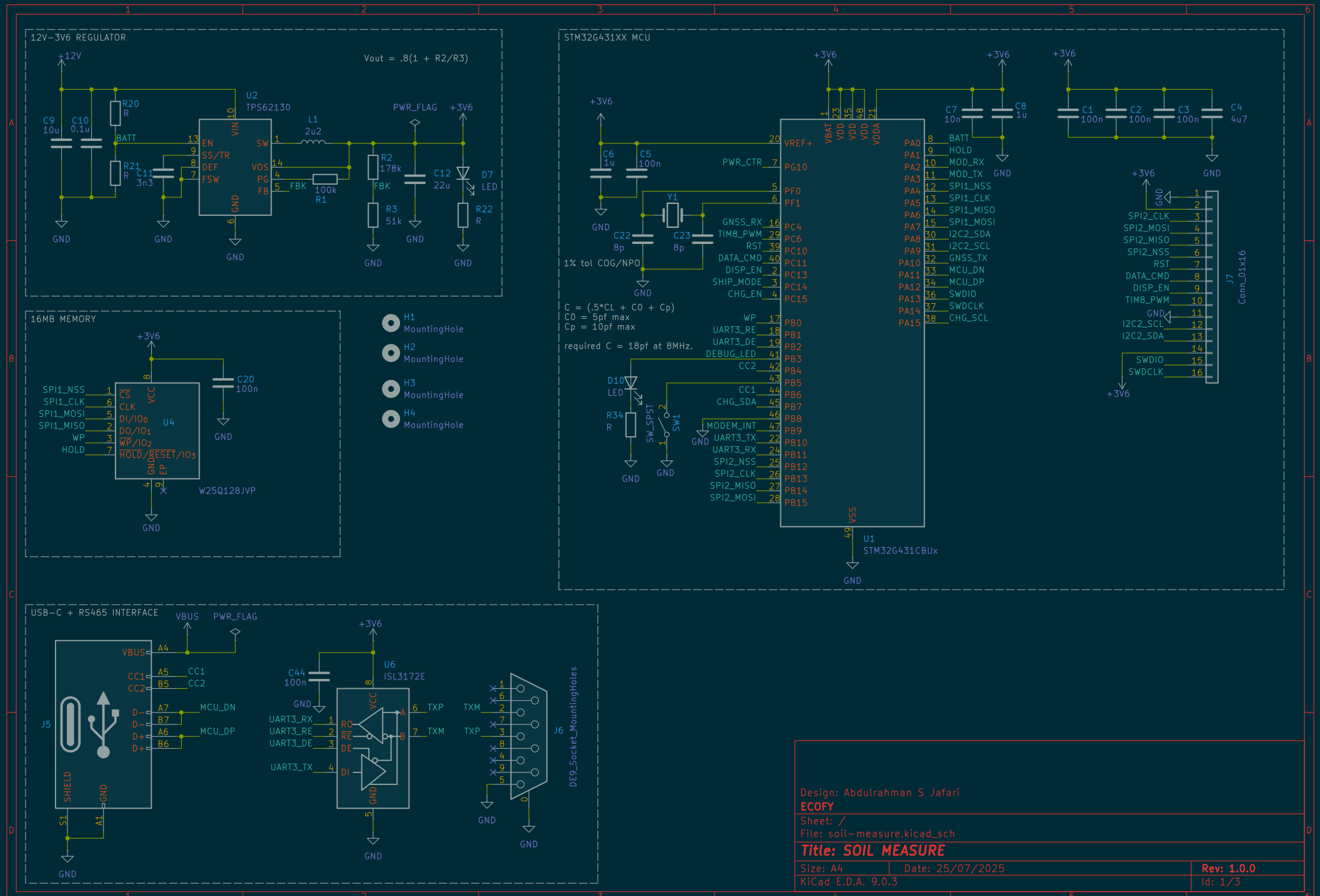

Design: Abdulrahman S Jafari
ECOFY
Sheet: /
File: soil–measure.kicad_sch

Title: SOIL MEASURE

Size: A4	Date: 25/07/2025	**Rev: 1.0.0**
KiCad E.D.A. 9.0.3		Id: 1/3

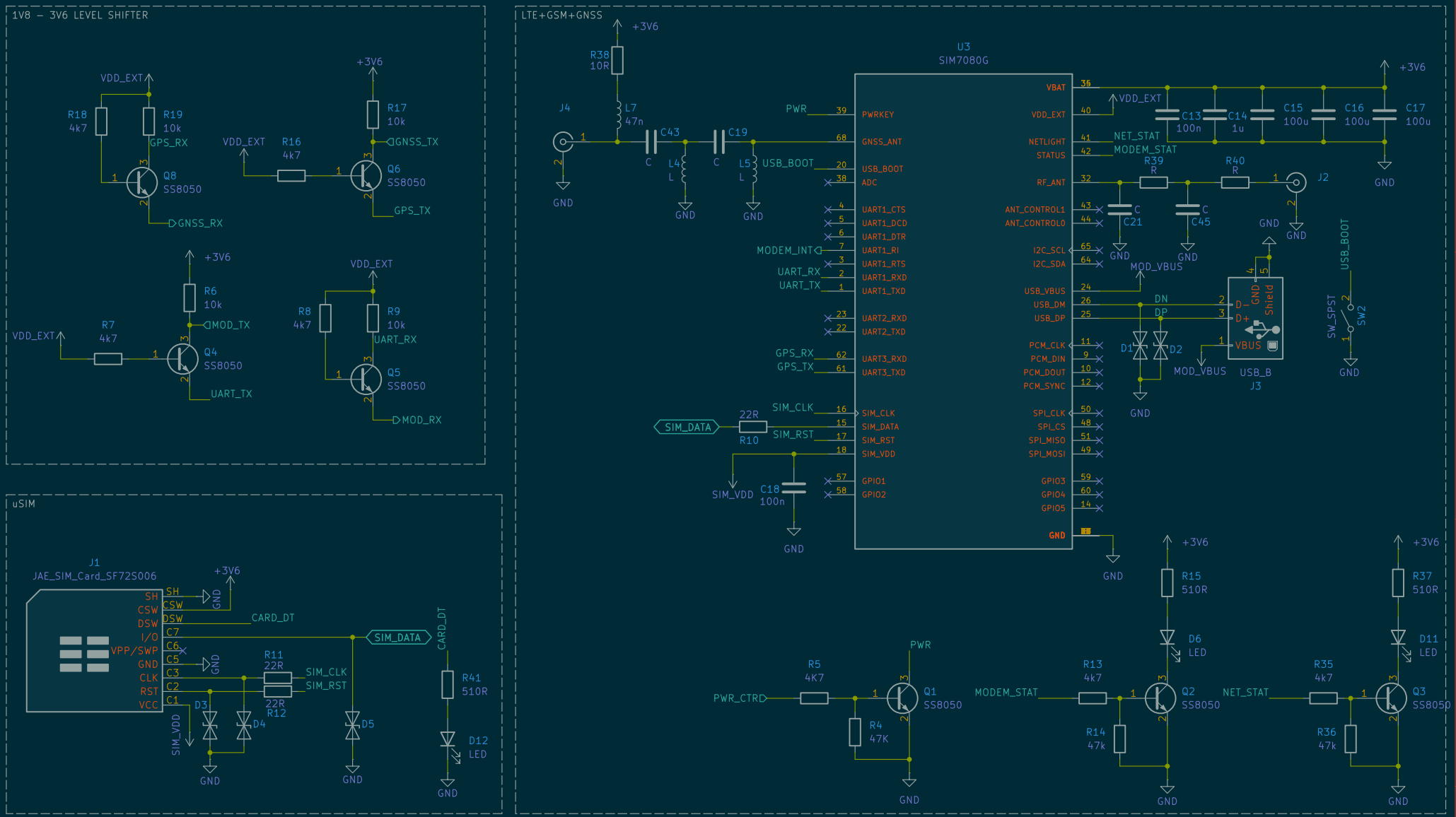

Designed: Abdulrahman S Jafari

ECOFY

Sheet: /cellular_interface/

File: modem.kicad_sch

Title: SOIL MEASURE

Size: A4	Date: 07/25/2025	**Rev: 1.0.0**
KiCad E.D.A. 9.0.3		Id: 2/3

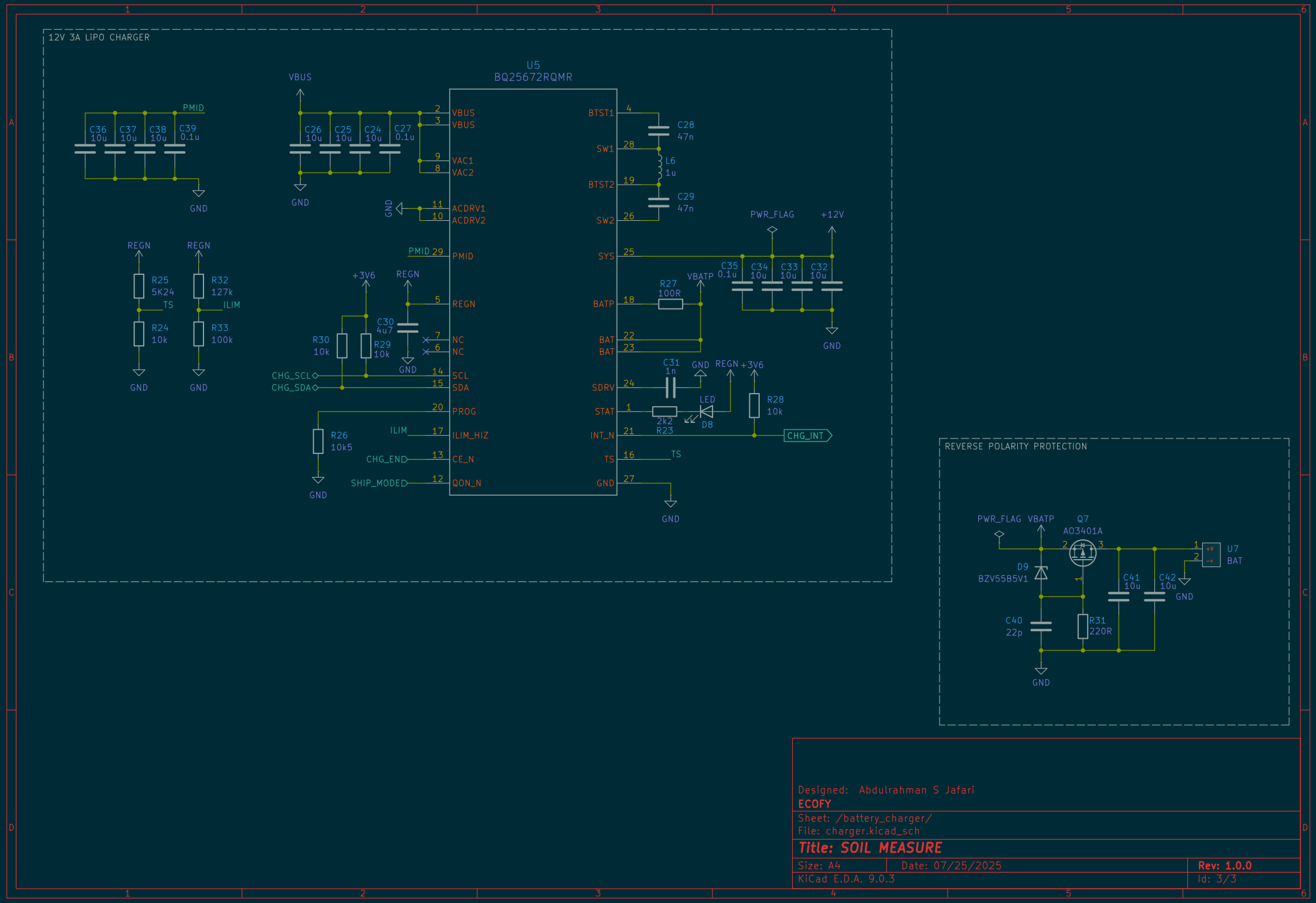
12V 3A LIPO CHARGER
U5
BQ25672RQMR
VBUS
PMID
C36 10u
C37 10u
C38 10u
C39 0.1u
C26 10u
C25 10u
C24 10u
C27 0.1u
GND
VBUS 2
VBUS 3
VAC1 9
VAC2 8
ACDRV1 11
ACDRV2 10
PMID 29
REGN 5
NC 7
NC 6
SCL 14
SDA 15
PROG 20
ILIM_HIZ 17
CE_N 13
QON_N 12
BTST1 4
SW1 28
BTST2 19
SW2 26
SYS 25
BATP 18
BAT 22
BAT 23
SDRV 24
STAT 1
INT_N 21
TS 16
GND 27
C28 47n
L6 1u
C29 47n
PWR_FLAG
+12V
C35 0.1u
C34 10u
C33 10u
C32 10u
R27 100R
VBATP
C31 1n
LED
D8
2k2 R23
R28 10k
CHG_INT
REGN
+3V6
R25 5K24
R24 10k
TS
R32 127k
R33 100k
ILIM
R30 10k
R29 10k
C30 4u7
CHG_SCL
CHG_SDA
R26 10k5
CHG_END
SHIP_MODE
REVERSE POLARITY PROTECTION
PWR_FLAG
VBATP
Q7
AO3401A
D9
BZV55B5V1
C40 22p
R31 220R
C41 10u
C42 10u
U7
BAT
Designed: Abdulrahman S Jafari
ECOFY
Sheet: /battery_charger/
File: charger.kicad_sch
Title: SOIL MEASURE
Size: A4
Date: 07/25/2025
Rev: 1.0.0
KiCad E.D.A. 9.0.3
Id: 3/3