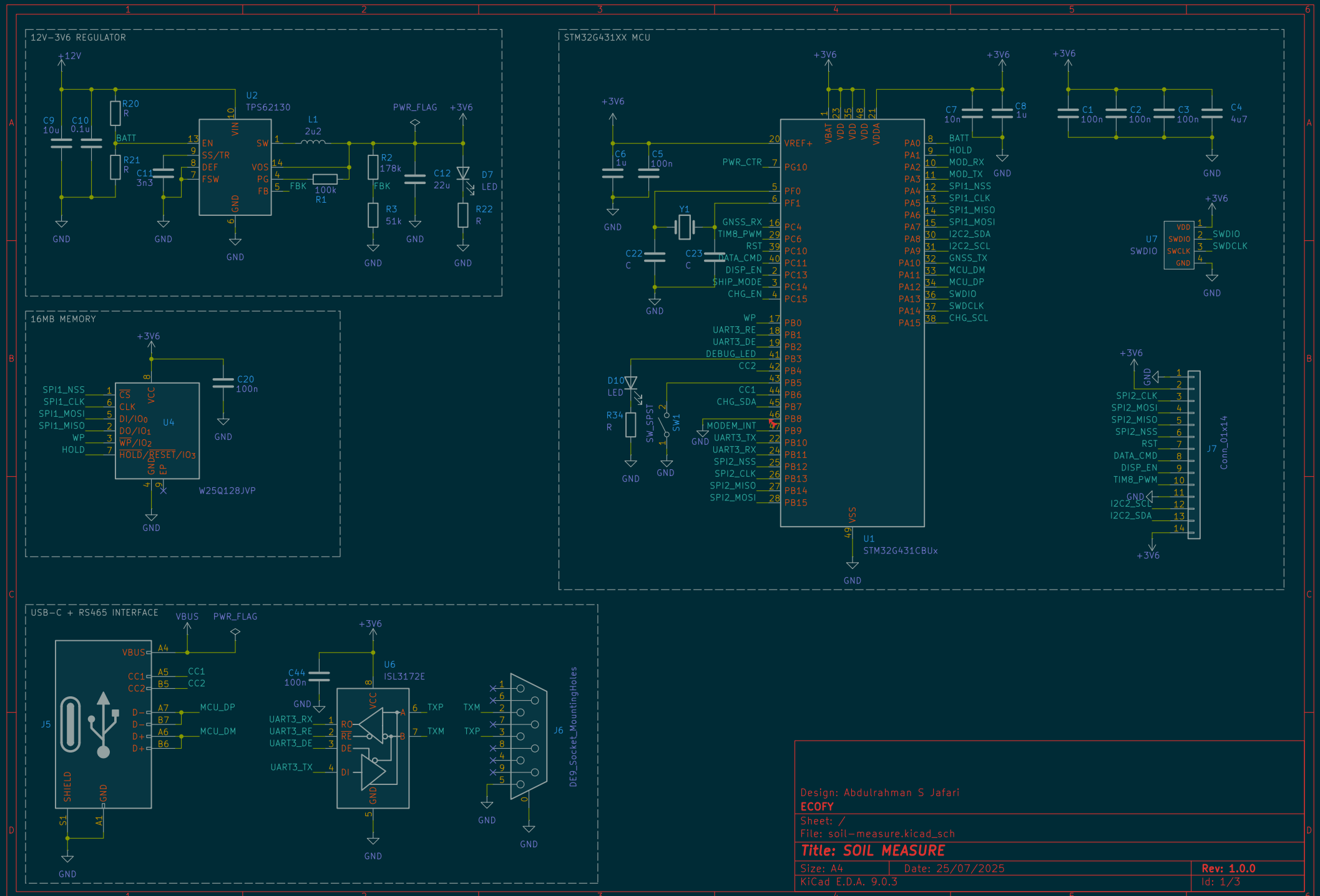
12V–3V6 REGULATOR
+12V
C9 10u
C10 0.1u
R20 R
R21 R
BATT
U2 TPS62130
EN
SS/TR
DEF
FSW
VIN
SW
VOS
PG
FB
GND
C11 3n3
L1 2u2
FBK
100k R1
R2 178k
R3 51k
PWR_FLAG
+3V6
C12 22u
D7 LED
R22 R
GND
16MB MEMORY
U4
SPI1_NSS
SPI1_CLK
SPI1_MOSI
SPI1_MISO
WP
HOLD
CS
CLK
DI/IO0
DO/IO1
WP/IO2
HOLD/RESET/IO3
VCC
GND
EP
C20 100n
W25Q128JVP
STM32G431XX MCU
U1 STM32G431CBUx
VREF+
VBAT
VDD
VDDA
VSS
PWR_CTR
PG10
PF0
PF1
PC4
PC6
PC10
PC11
PC13
PC14
PC15
PB0
PB1
PB2
PB3
PB4
PB5
PB6
PB7
PB8
PB9
PB10
PB11
PB12
PB13
PB14
PB15
PA0
PA1
PA2
PA3
PA4
PA5
PA6
PA7
PA8
PA9
PA10
PA11
PA12
PA13
PA14
PA15
C6 1u
C5 100n
Y1
C22 C
C23 C
GNSS_RX
TIM8_PWM
RST
DATA_CMD
DISP_EN
SHIP_MODE
CHG_EN
UART3_RE
UART3_DE
DEBUG_LED
CC2
CC1
CHG_SDA
MODEM_INT
UART3_TX
UART3_RX
SPI2_NSS
SPI2_CLK
SPI2_MISO
SPI2_MOSI
D10 LED
R34 R
SW_SPST
SW1
BATT
HOLD
MOD_RX
MOD_TX
SPI1_NSS
SPI1_CLK
SPI1_MISO
SPI1_MOSI
I2C2_SDA
I2C2_SCL
GNSS_TX
MCU_DM
MCU_DP
SWDIO
SWDCLK
CHG_SCL
C7 10n
C8 1u
C1 100n
C2 100n
C3 100n
C4 4u7
U7 SWDIO
VDD
SWDIO
SWCLK
GND
J7 Conn_01x14
USB–C + RS465 INTERFACE
VBUS
PWR_FLAG
J5
VBUS
CC1
CC2
D–
D+
SHIELD
GND
MCU_DP
MCU_DM
C44 100n
U6 ISL3172E
VCC
RO
RE
DE
DI
UART3_RX
UART3_RE
UART3_DE
UART3_TX
TXP
TXM
J6 DE9_Socket_MountingHoles
Design: Abdulrahman S Jafari
ECOFY
Sheet: /
File: soil–measure.kicad_sch
Title: SOIL MEASURE
Size: A4
Date: 25/07/2025
Rev: 1.0.0
KiCad E.D.A. 9.0.3
Id: 1/3

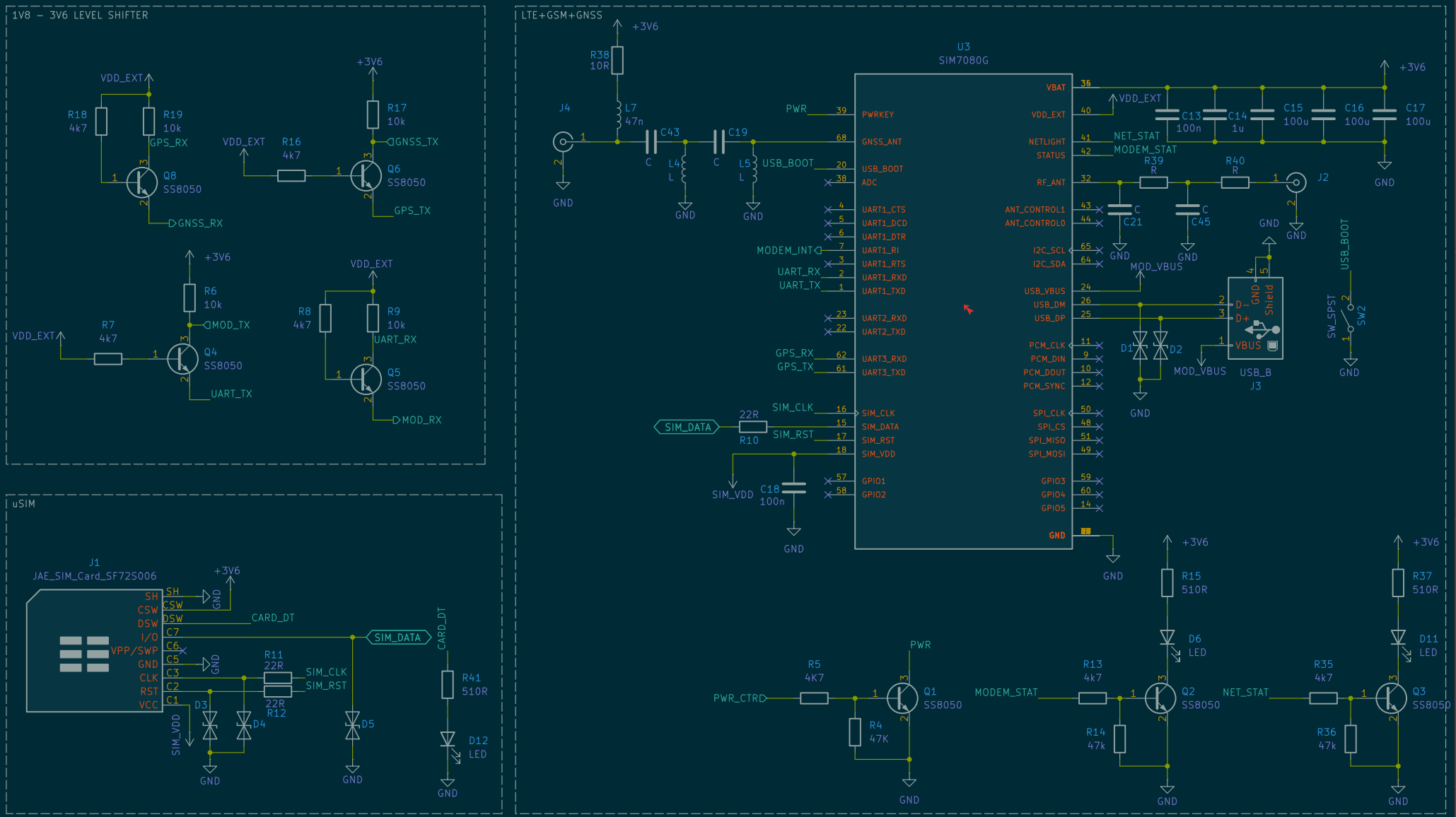

Designed: Abdulrahman S Jafari

ECOFY

Sheet: /cellular_interface/

File: modem.kicad_sch

Title: SOIL MEASURE

Size: A4	Date: 07/25/2025	**Rev: 1.0.0**
KiCad E.D.A. 9.0.3		Id: 2/3

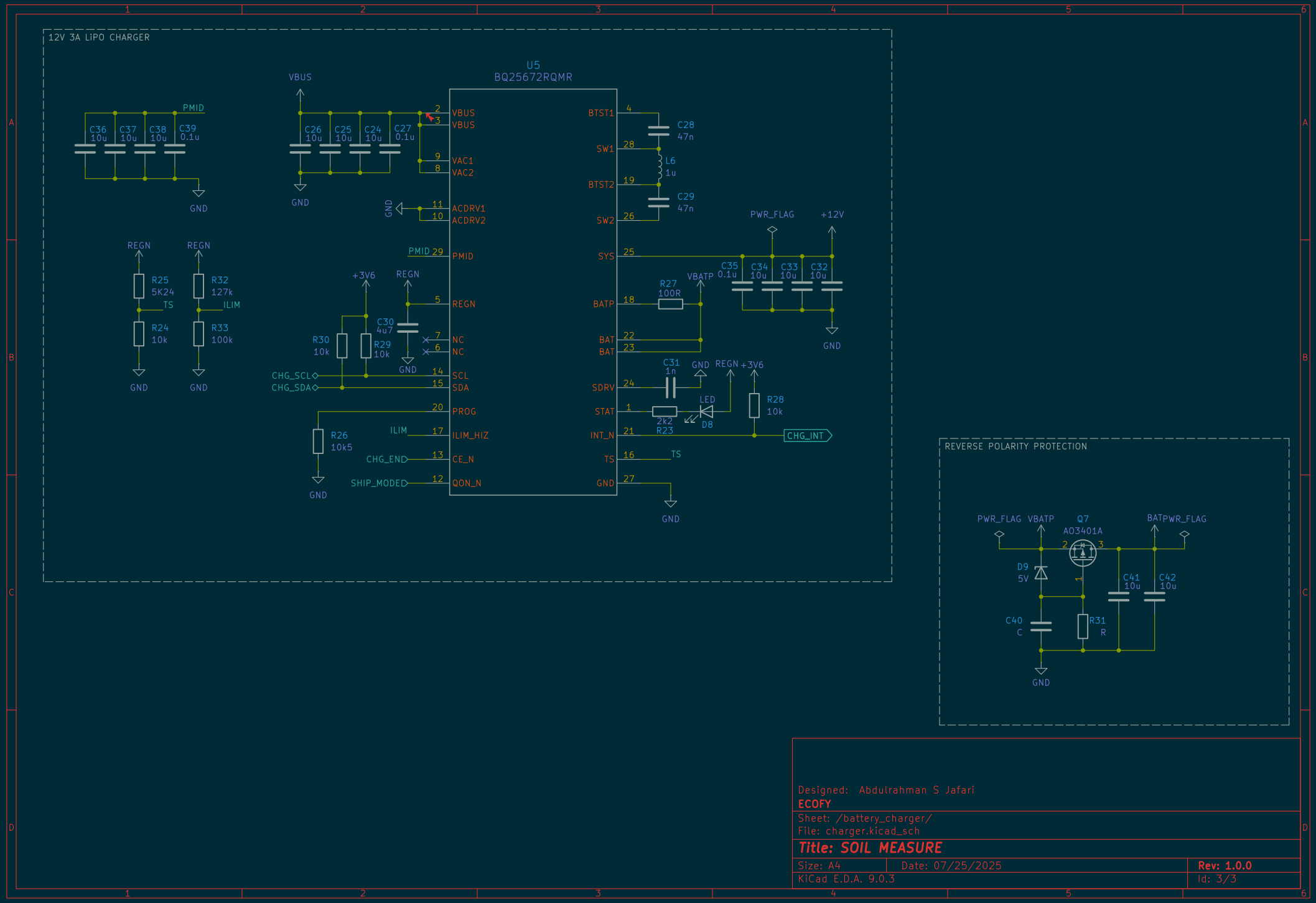
12V 3A LIPO CHARGER
U5
BQ25672RQMR
VBUS
PMID
C36 10u
C37 10u
C38 10u
C39 0.1u
C26 10u
C25 10u
C24 10u
C27 0.1u
GND
VBUS
VAC1
VAC2
ACDRV1
ACDRV2
PMID
REGN
NC
SCL
SDA
PROG
ILIM_HIZ
CE_N
QON_N
BTST1
SW1
BTST2
SW2
SYS
BATP
BAT
SDRV
STAT
INT_N
TS
C28 47n
L6 1u
C29 47n
PWR_FLAG
+12V
C35 0.1u
C34 10u
C33 10u
C32 10u
VBATP
R27 100R
C31 1n
LED
D8
2k2 R23
R28 10k
CHG_INT
REGN
R25 5K24
R24 10k
R32 127k
R33 100k
ILIM
+3V6
R30 10k
R29 10k
C30 4u7
CHG_SCL
CHG_SDA
R26 10k5
CHG_END
SHIP_MODE
REVERSE POLARITY PROTECTION
PWR_FLAG
VBATP
Q7
AO3401A
BATPWR_FLAG
D9 5V
C41 10u
C42 10u
C40 C
R31 R
Designed: Abdulrahman S Jafari
ECOFY
Sheet: /battery_charger/
File: charger.kicad_sch
Title: SOIL MEASURE
Size: A4
Date: 07/25/2025
Rev: 1.0.0
KiCad E.D.A. 9.0.3
Id: 3/3