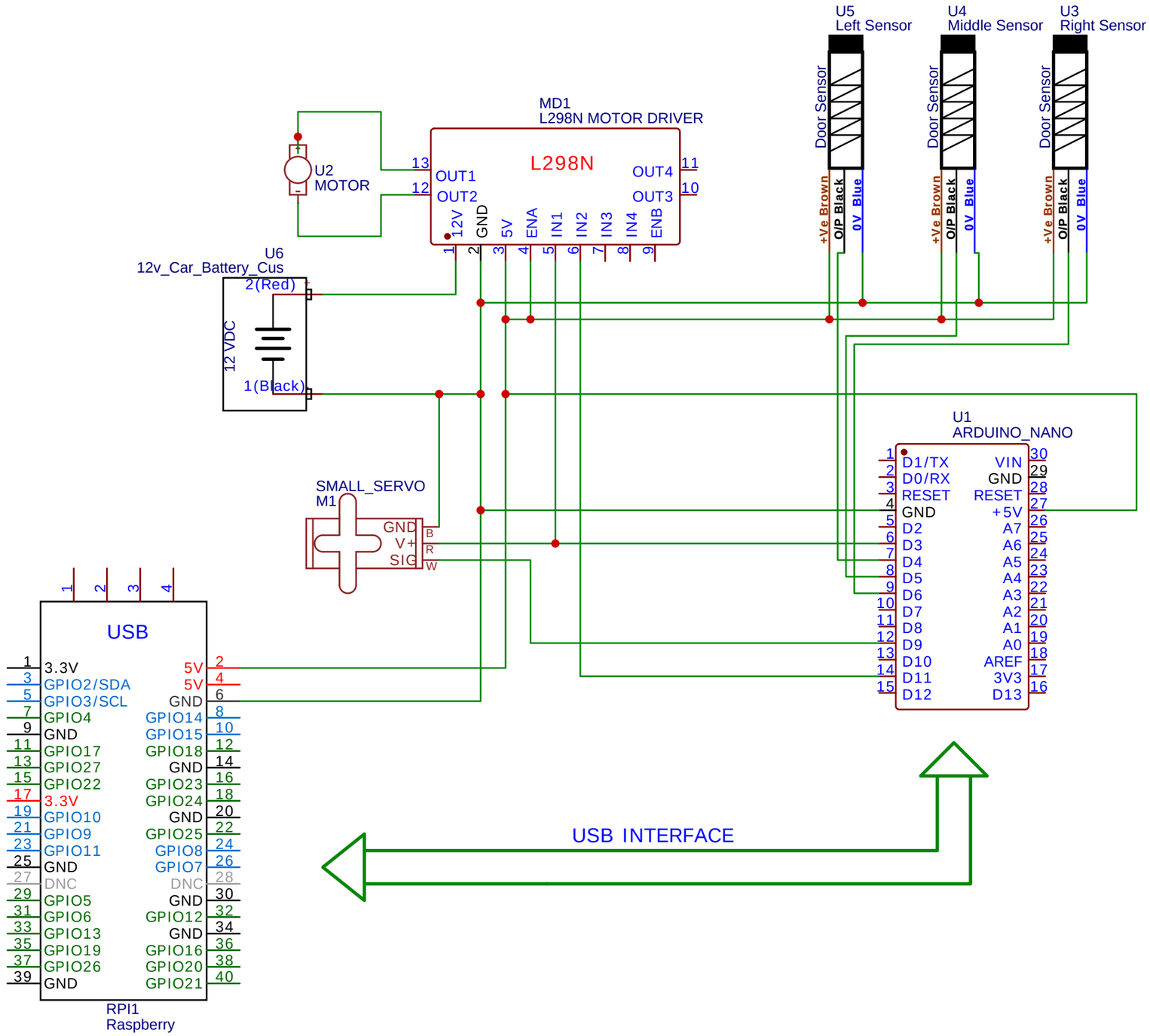

TITLE: Sheet_1		REV: 1.0
EasyEDA	Company: kamil03agayev@gmail.com	Sheet: 1/1
	Date: 2024-09-05 Drawn By: Metal Minds	