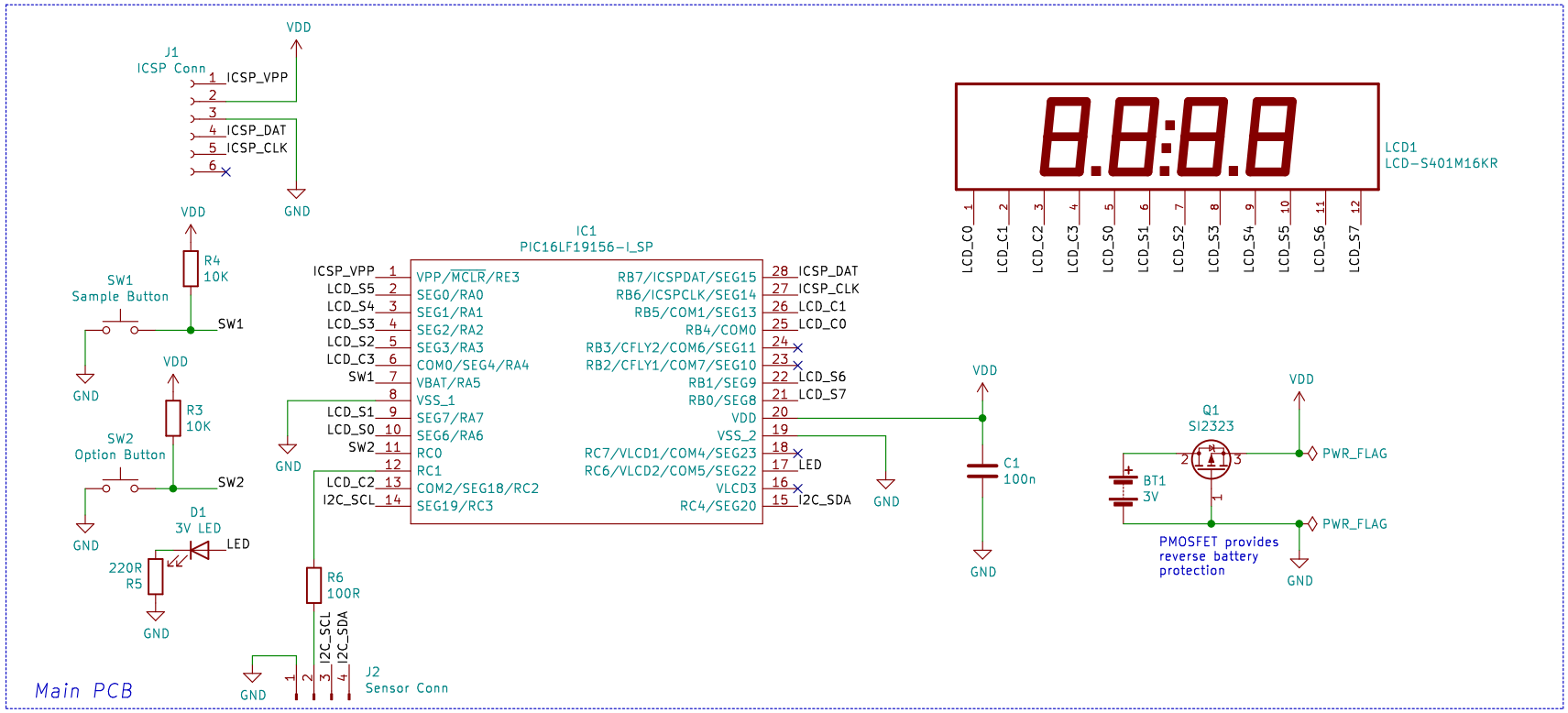


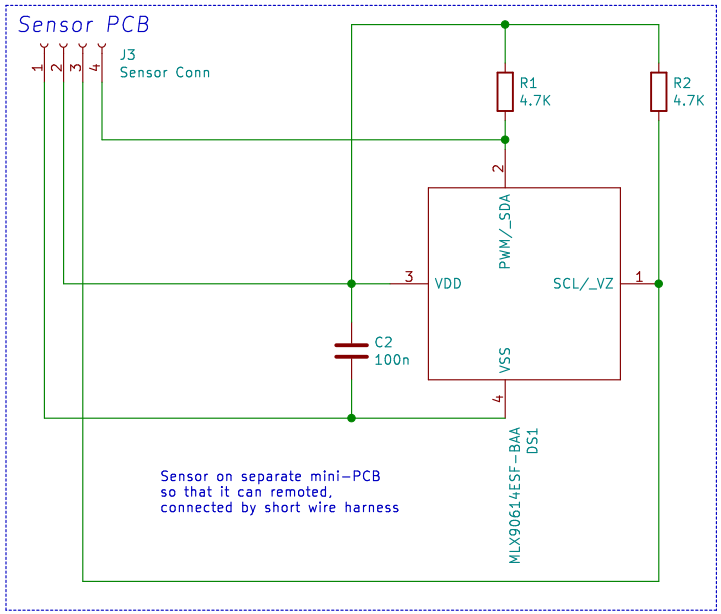


A minimal part, low-power design for a non-contact IR thermometer.

**Karen A. Morrissey**

Sheet: /

File: IR_Thermometer.sch

**Title: Non-contact IR Thermometer**

| | | |
|---|---|---|
| Size: USLetter | Date: 2022-02-28 | **Rev: 0.8** |
| KiCad E.D.A. kicad (5.1.9)-1 | | Id: 1/1 |