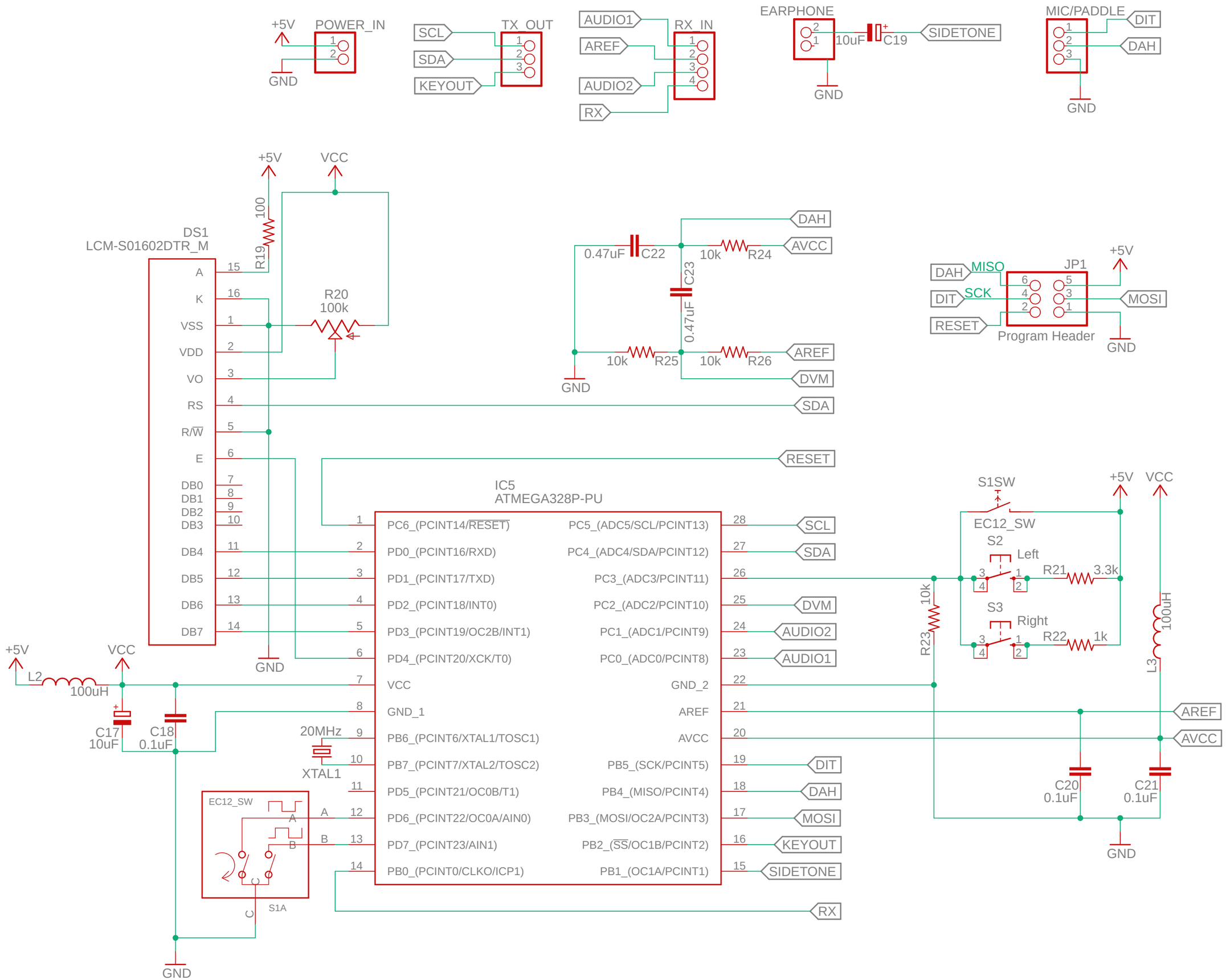

2020/05/25 0:47 f=1.50 C:\Users\Owner\Documents\EAGLE\projects\UCX\UCX_Micro\backend.sch (Sheet: 1/1)