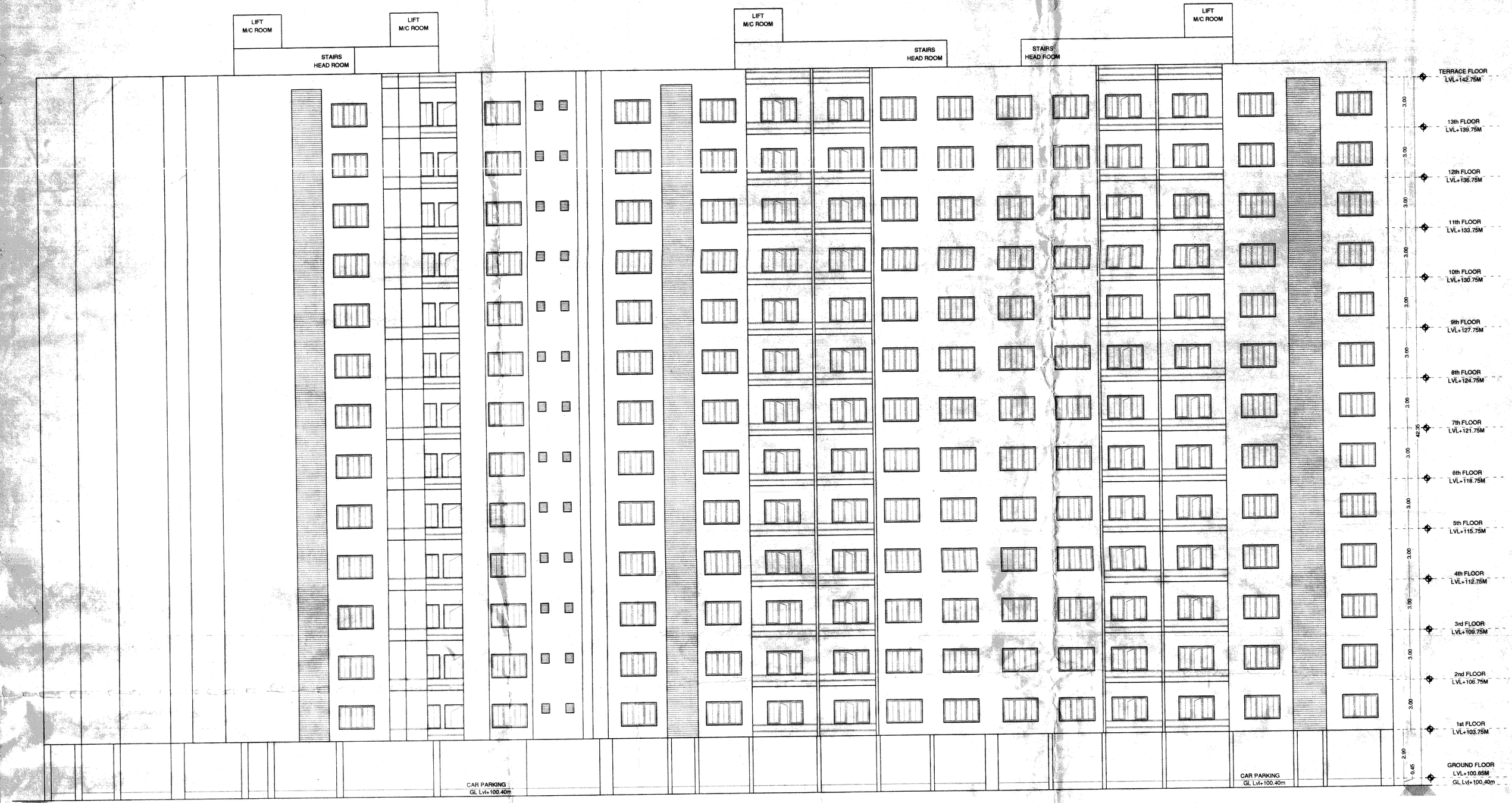

ELEVATION

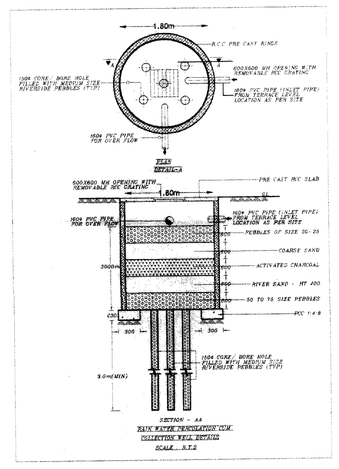

BBMP/Addl.Dir/JD SOUTH/0071/13-14

I Conditions:

1. Plan Sanction is accorded for the proposed Residential Apartment building :
   a) Construction of BF+GF+13UF (Thirteen upper floors) only
2. Sanction is accorded for Residential use only. The use of the building shall not be deviated to any other use.
3. Basement floor area and part of Ground floor and surface area parking reserved for car parking shall not be converted for any other purpose.
4. Development charges towards increasing the capacity of water supply, sanitary and power main has to be paid to BWSSB and BESCOM if any.
5. Necessary ducts for running telephone cables, cubicles at ground level for postal services & space for dumping garbage within the premises shall be provided.
6. The applicant shall construct temporary toilets for the use of construction workers and it should be demolished after the construction.
7. The applicant shall insure all workmen involved in the construction work against any accident/untoward incidents arising during the time of construction.
8. The applicant shall not stock any building materials / debris on footpath or on roads or on drains. The debris shall be removed and transported to near by dumping yard.
9. The applicant / builder is prohibited from selling the setback area / open spaces and the common facility areas, which shall be accessible to all the tenants and occupants.
10. The applicant shall provide a space for locating the distribution transformers & associated equipment as per K.E.R.C (Ele & D) code leaving 3.00 mts. from the building within the premises.
11. The applicant shall provide a separate room preferably 4.50 x 3.65 m in the basement for installation of telecom equipment and also to make provisions for telecom services as per Bye-law No. 25.
12. The applicant shall maintain during construction such barricading as considered necessary to prevent dust, debris & other materials endangering the safety of people / structures etc. in & around the site.
13. The applicant shall plant at least two trees in the premises.
14. Permission shall be obtained from forest department for cutting trees before the commencement of the work.
15. License and approved plans shall be posted in a conspicuous place of the licensed premises. The building license and the copies of sanctioned plans with specifications shall be mounted on a frame and displayed and they shall be made available during inspections.
16. If any owner / builder contravenes the provisions of Building Bye-laws and rules in force, the Architect / Engineer / Supervisor shall be informed by the Authority in the first instance, warned in the second instance and cancel the registration if the same is repeated for the third time.
17. Technical personnel, applicant or owner as the case may be shall strictly adhere to the duties and responsibilities specified in Schedule -IV (Bye-law No. 3.8) under sub section IV -8 (e) to (b)....
18. The building shall be constructed under the supervision of a registered structural engineer.
19. On completion of foundation or footings before erection of walls on the foundation and in the case of columnar structure after erecting the columns " COMMENCEMENT CERTIFICATE" shall be obtained.
20. Construction or reconstruction of the building should be completed before the expiry of five years from the date of issue of license & within one month after its completion shall apply for permission to occupy the building.
21. The building should not be occupied without obtaining " OCCUPANCY CERTIFICATE" from the competent authority.
22. Drinking water supplied by BWSSB should not be used for the construction activity of the building.
23. The applicant shall ensure that the Rain Water Harvesting Structures are provided & maintained in good repair for storage of water for non potable purposes or recharge of ground water at all times having a minimum total capacity mentioned in the Bye -law 32(a).
24. The building shall be designed and constructed adopting the norms prescribed in National Building code and in the "Criteria for earthquake resistant design of structures" bearing No.IS 1893 - 2002 published by the Bureau of Indian Standards making the building resistant to earthquake.
25. The applicant should provide solar water heaters as per table 17 of Bye - law No. 29 for the building.
26. Facilities for physically handicapped persons prescribed in schedule XI (Bye laws – 31) of Building bye -laws 2003 shall be ensured.
27. The applicant shall provide at least one common toilet in the ground floor for the use of the visitors / servants / drivers and security men and also entrance shall be approached through a ramp for the Physically Handicapped persons together with the stepped entry.
28. The Occupancy Certificate will be considered only after ensuring that the provisions of conditions vide Sl. No. 23, 24, 25 & 26 are provided in the building.
29. The applicant shall ensure that no inconvenience is caused to the neighbours in the vicinity of construction and that the construction activities shall stop before 6.00 PM to avoid hindrance during late hours.
30. Garbage originating from Apartments / Commercial buildings shall be segregated into organic and inorganic waste and should be processed in the Recycling processing unit of required capacity installed at site for its re -use/ disposal (Applicable for Residential units of 50 and above and 5000 Sqm and above built up area for Commercial building).
31. The structures with basement/s shall be designed for structural stability and safety to ensure for soil stabilization during the course of excavation for basement/s with safe design for retaining walls and super structure for the safety of the structure as well as neighbouring property, public roads and footpaths, and besides ensuring safety of workman and general public by erecting safe barricades.
32. The consent for Establishment from the Ministry of Environmental and Forest (MOEF) / KSPCB should be taken wherever applicable.
33. Sufficient two wheeler parking shall be provided as per requirement.
34. Traffic Management Plan shall be obtained from Traffic Management Consultant for all high rise structures which shall be got approved from the Competent Authority if necessary.
35. TDR certificate should be produced at the time of obtaining Occupancy Certificate (5% of the sitial area).
36. The owner / Association of highrise building shall obtain clearance certificate from Fire Force Department with due inspection regarding working condition of Fire Safety Measures installed. The certificate should be produced to the corporation and shall get the renewal of the permission issued once in two years.
37. The Owner / Association of the highrise building shall get the building inspected by empanelled agencies of the Fire Force Department to ensure that the fire equipments installed are in good and workable condition, and an affidavit to that effect shall be submitted to the corporation and Fire Force Department every year.
38. The owner / Association of highrise building shall obtain clearance certificate from the Electrical Inspectorate every five years with due inspection by the department regarding working condition of Electrical Installations / Lifts etc. The certificate should be produced to the corporation and shall get the renewal of the permission issued.
39. The Owner / Association of the high-rise building shall conduct two mock- trials in the building one before the onset of summer and another during the summer and assure complete safety in respect of fire hazards.
40. In case of any false information, misrepresentation of facts, or pending court cases, the plan sanction is deemed cancelled.

Special Condition as per Labour Department of Government of Karnataka vide ADDENDUM (Housing) hoodi(K) LD/95/LET/2013, dated: 01-04-2013

1. Registration of Applicant/ Builder/ Owner/ Contractor and the construction workers working in the construction site with the "Karnataka Building and Other Constructions Workers Welfare Board" should be strictly adhered to.
2. The Applicant / Builder / Owner / Contractor should submit the Registration of establishment and list of construction workers engaged at the time of issue of Commencement Certificate. A copy of the same shall also be submitted to the concerned local Engineer in order to inspect the establishment and ensure the registration of establishment and workers working at construction site or work place.
3. The Applicant / Builder / Owner / Contractor shall also inform the changes if any of the list of workers engaged by him.
4. At any point of time Applicant/ Builder/ Owner/ Contractor shall engage a construction worker in the site or workplace who is not registered with the "Karnataka Building and Other Constructions Workers Welfare Board".

Note:

1. Accommodation shall be provided for setting up of schools for imparting education to the children of construction workers in the labour camps / construction sites
2. List of children of workers shall be furnished by the builder / contractor to the Labour Department which is mandatory.
3. Employment of child labour in the construction activities strictly prohibited
4. Obtaining NOC from the Labour Department before commencing the construction work is a must.
5. BBMP will not be responsible for any dispute that may arise in respect of property in question.
6. In case if the documents submitted in respect of property in question is found to be false or fabricated, the plan sanctioned stands cancelled automatically and legal action will be initiated.
7. The demand for payment of Park & Open Space fee is Quashed as per the orders fo Hon'ble High Court vide W.P.No.25221/2010(LB-BMP), however this is subject to condition for remittance of such cost in future, based on the outcome of the final court orders.

FEE DETAILS

II. The Applicant has paid the fee vide Receipt No. TP / JDTPSUT / 01 / 2014 - 15 / Nov / 0009 dated: 07-11-2014 for the following:

1. Ground Rent	: Rs.	30,75,362-00
2. Betterment Charges		
a) For Building	: Rs.	1,55,520-00
b) For Site	: Rs.	13,78,800-00
3. Security Deposit	: Rs.	76,35,842-00
4. Plan Copies charges	: Rs.	1,111,800-00
5. Compound wall charges	: Rs.	6,000-00
6. Licence Fees	: Rs.	61,15,882-00
7. 1% for administrative charges towards labour Cess	: Rs.	1,02,739-00
TOTAL	: Rs.	1,85,81,745-00
SAY	: Rs.	1,85,82,000-00
8. Park & open space charges	: Rs.	5,93,86,000-00

Labour Cess
vide DD No. 048229 dated: 15-11-2014 Rs. 89,51,000/-
Bank : The karnataka Bank Ltd., Basaveshwara nagar Branch, Banglore.

1. vide DD No. 048217 dated: 30-10-2014	Rs.	9000000/-
Bank : The karnataka Bank Ltd., Basaveshwara nagar Branch, Banglore.		
2. vide DD No. 048218 dated: 30-10-2014	Rs.	9582000/-
Bank : The karnataka Bank Ltd., Basaveshwara nagar Branch, Banglore.		

AREA STATEMENT (BBMP)

PROJECT DETAIL:

Application No.:	BBMP/Addl.Dir/JD SOUTH/0071/13-14		
Application Type:	General	Zone:	South
Proposal Type:	Proposed Development	Ward:	Ward-157
Nature of Sanction:	New	Plot No Value:	320,320/5
Plot Use:	Residential	City Survey No.:	-
Location:	Ring-II	Property No.:	-
Land Use Zone:	Residential (Main)		
Locality/Street:	-		

AREA DETAILS		SQ.MT.
AREA OF PLOT (Minimum)	(A)	18383.97
NET AREA OF PLOT (Plot Area considered for COVERAGE)	(B)	18383.97
BALANCE AREA OF PLOT (Considered For Perm.FAR)	(C)	18383.97
MAX. PERMISSIBLE COVERAGE AREA	(50%)	9191.98
Proposed Coverage Area	(23.23%)	4269.93
Achieved Net coverage area	(23.23%)	4269.93
BALANCE COVERAGE AREA LEFT	(26.77%)	4922.05
PERMISSIBLE FAR (As per Zoning Regulation 2015)	(3.00)	55151.90
ADDITIONAL FAR	-	-
Residential FAR		54353.00
Proposed FAR Area		54476.66
Substructure Area Add in FAR (Layout Lvl)		15.00
ACHIEVED NET FAR AREA	(2.96)	54491.66
BALANCE FAR AREA	(0.04)	660.24
PERMISSIBLE BUILT UP AREA		-
ACHIEVED BUILT UP AREA		76357.43
ARCH / ENGG / SUPERVISOR (Regd)	OWNER	

N. GANESH, B.E.....FIV., Regd Valuer No. F-6784, New Delhi Regd Eng B.C.C./R.L/3.6/E-.2077/07-08 No. 4/2, 8th Cross, 8th Main, S. R. Nagar, BANGALORE - 560 027.
Ganesh N
BCC/BL-3.6/E-3097/07-08

M/s Pride Expert Properties pvt ltd
Rep by director
B.R Ravindra
GPA holder for
SHRIRAMA METAL WORKS

OWNER'S NAME:

M/s Pride Expert Properties pvt ltd Rep by director B.R Ravindra
GPA holder for SHRIRAMA METAL WORKS

PROJECT DESCRIPTION::

PROPOSED RESIDENTIAL APARTMENT BUILDING AT KHATHA NO : 320 & 320/5, SY.NO.11/2, GALLI ANJANEYA TEMPLE, DEEVITIGERAMANAHALLI VILLAGE,KENGERI HOBLI, (W.NO:158), BANGALORE SOUTH TALUK.

ARCHITECT:

Ganesh N
BCC/BL-3.6/E-3097/07-08

BUILDING DETAILS

Block Name	Use	Ancillary Use	Structure
A (RESIDENTIAL)	Residential	MultiDwelling Units	Highrise
B (RESITAINTALE)	Residential	MultiDwelling Units	Highrise

Parking Type	Reqd No.	Reqd Area	Prop No.	Prop Area
Car	430	5912.50	491	6751.25
Visitor's Car Parking	43	591.25	0	0.00
Total Car	473	6503.75	491	6751.25
TwoWheeler	43	591.25	0	0.00
Total Area	-	7095.00	-	24273.94

TOTAL FAR BUILT UP AREA STATEMENT:

Block Name	Residential FAR Area	Total FAR Area	Total BUArea	Tenement No.	Carpet Area other than Tenement
A-1 (RESIDENTIAL)	27228.10	27351.76	46488.45	214.00	350.95
B-1 (RESITAINTALE)	27124.91	27124.91	29853.98	216.00	0.00
Total	54353.00	54476.66	76342.43	430.00	350.95

NOC DETAILS

Sl. NO.	Name of the statutory Department	Reference no. and date	Conditions imposed
1.	FIRE	GBC (1) 558/2012 dated: 10-05-13	All the conditions imposed in the letter issued by the statutory body should be adhered to..
2.	AIRPORT	ASC/DGM(AO)/181/HAL-BG-276/2012 dated: 20-12-12	
3.	KSPCB	PCB/428/CNP/12/H-66 dt: 08-04-2013	
4.	SEIAA	SEIAA:181:CON:2012 dated: 08-04-2013	
5.	BWSSB	BWSSB/EIC/ACE (R)/DCE(M)/TA(M)-II/6860 dt: 04-01-2013	
6.	BESCOM	Acknowledgement dt: 18-08-2012	
7.	BSNL	AGM(TP)/S-6/XVII/2012-13/19 dt:07-11-12	

DRAWING TITLE	SCALE	SHEET NO.
ELEVATION & RWH DETAIL	1:100	08 OF 09

ನಕಲು ಪ್ರತಿ

ಸನ್ಮಿ ಮಾನ್ಯರವರು, ಪಾಲಿಕೆ ಆಯುಕ್ತರ ಆದೇಶದ ದಿನಾಂಕ:14-09-2014 ರಂತೆ ಮೇಲ್ಕಂಡ ವಿಳಾಸದಲ್ಲಿ ಸ್ವಂತ ಬಳಕೆಗಾಗಿ ಆ.ಸಿ.ಸಂ.ಬಿ.ಎಲ್.(ಸಿ.ಮತ್ತು ಟಿ)/271/14-15 ದಿನಾಂಕ: 24-11-2014 ಕ್ಕೆ ಕಟ್ಟಡ ಪರವಾನಿಗೆ ಮಂಜೂರು ಮಾಡಿದೆ. ಸದರಿ ಸನ್ಮಿ ಮಾನ್ಯರವರು ಕಟ್ಟಡದ ವಿನ್ಯಾಸದಂತೆ ಪರಿಶೀಲನೆ ಮಾಡಿದ್ದು ಕಟ್ಟಡ ಆಯುಕ್ತರವರಿಗೆ ದಿನಾಂಕ: 24-11-2014 ರಂದು ಸಲ್ಲಿಸಿದ ವರದಿಯಲ್ಲಿ ಕಟ್ಟಡ ಪರವಾನಿಗೆ ಮಂಜೂರು ಮಾಡಿದೆ ಹಾಗೂ ಸದರಿ ಸನ್ಮಿ ಮಾನ್ಯರವರು ಕಟ್ಟಡದ ವಿನ್ಯಾಸದಂತೆ ಕಟ್ಟಡವನ್ನು ನಿರ್ಮಾಣ ಮಾಡಿರುತ್ತಾರೆ.

ಸನ್ಮಿ : ಪಾಲಿಕೆ ಆಯುಕ್ತರವರಿಗೆ ಆದೇಶ ಸಂಖ್ಯೆ: BS(ಸಿ)/7724/14-15
ದಿನಾಂಕ: 29/10/14 ಕಟ್ಟಡ ಪರವಾನಿಗೆ ಮಂಜೂರು ಮಾಡುವಂತೆ ಸಂಬಂಧಪಟ್ಟ ಮಾನ್ಯರು ತಿಳಿಸಿರುವ ಷರತ್ತುಗಳನ್ನು ಪಾಲಿಸಿ ಕಟ್ಟಡ ಪರವಾನಿಗೆ ಮಂಜೂರಿಗೆ ಶಿಫಾರಸ್ಸು ಮಾಡಲಾಗಿದೆ.
ದಿನಾಂಕ: 24/11/14 ಕಟ್ಟಡ ಪರವಾನಿಗೆ ಮಂಜೂರು ಮಾಡುವಂತೆ ಸಂಬಂಧಪಟ್ಟ ಮಾನ್ಯರು ತಿಳಿಸಿರುವ ಷರತ್ತುಗಳನ್ನು ಪಾಲಿಸಲಾಗಿದೆ.

ಸಹಾಯಕ ಕಂದಾಯ ಅಧಿಕಾರಿ
ಬಂಗಲೆ-ಬೆಂಗಳೂರು ದಕ್ಷಿಣ ವಲಯ-ಬೆಂಗಳೂರು
ಸ್ವಾಧೀನ ಪಡಿಸಿಕೊಳ್ಳುವುದು ಮತ್ತು ಪುನರ್ವಸತಿ ಘಟಕ.
ಬೆಂಗಳೂರು.