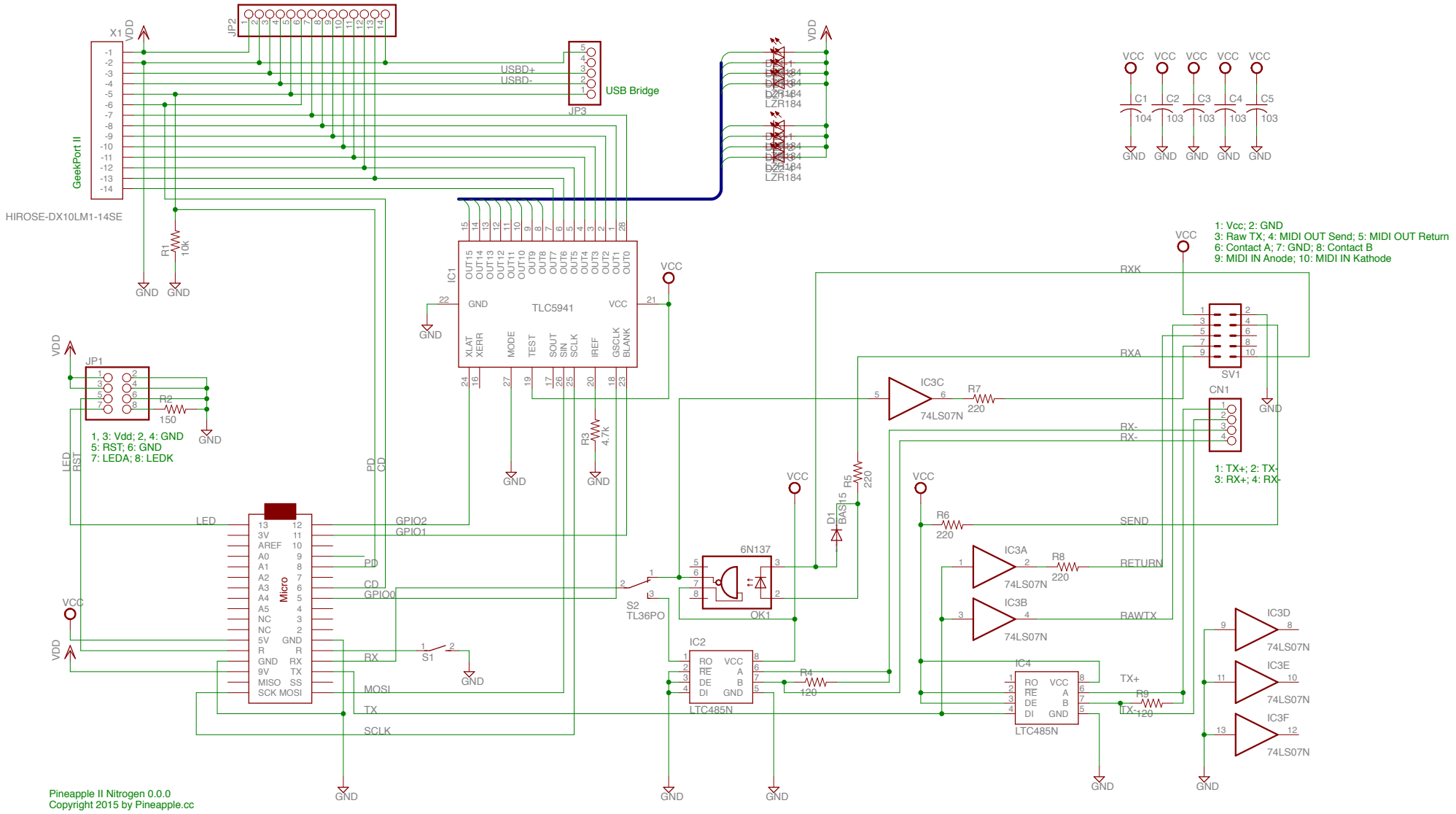

4/22/15 08:49 f=0.75 /Users/kanaya/Documents/Pineapple_II_Nitrogen/Hardware/Board/P2N15-001.sch (Sheet: 1/1)