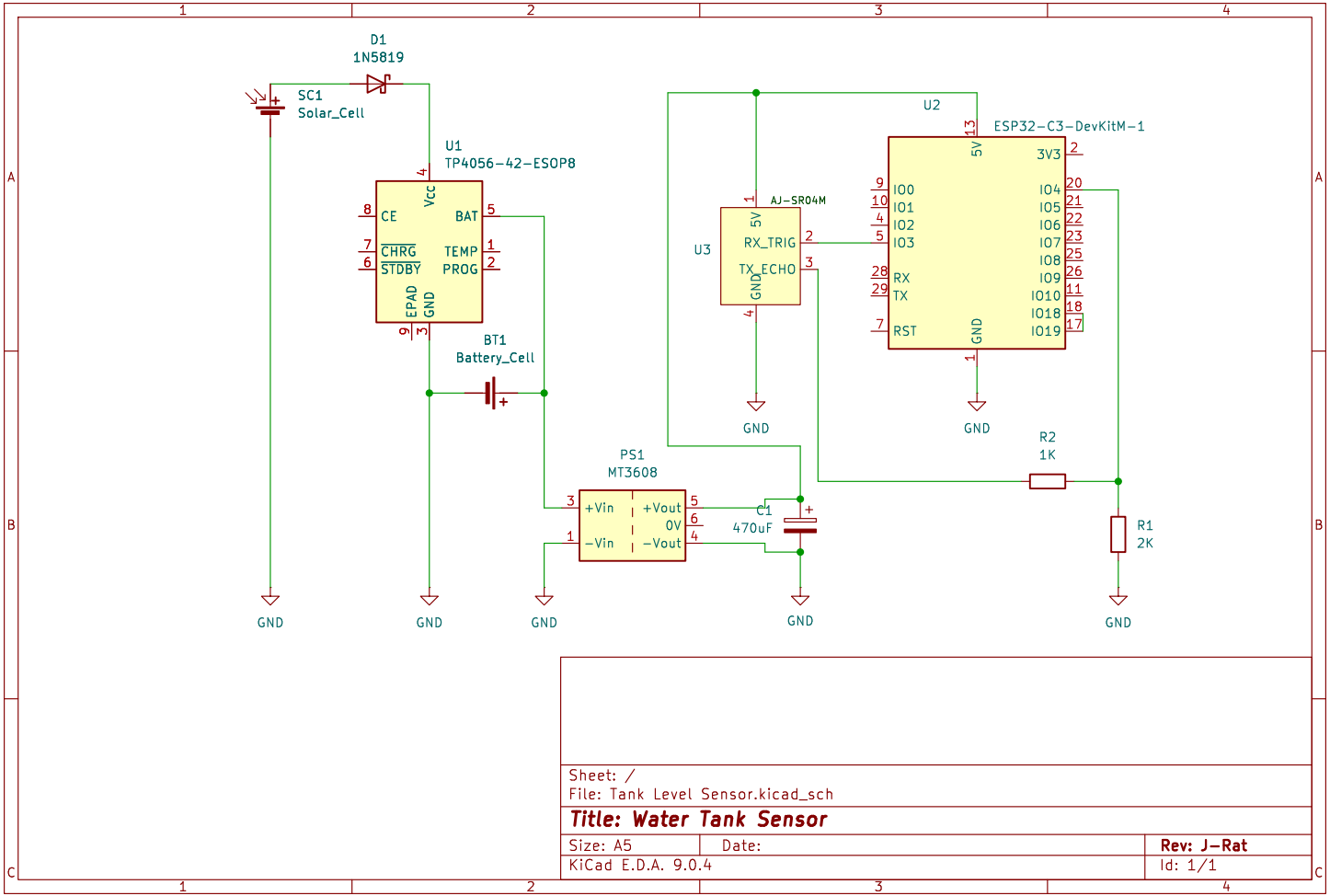

Sheet: /
File: Tank Level Sensor.kicad_sch

Title: Water Tank Sensor

Size: A5	Date:	Rev: J-Rat
KiCad E.D.A. 9.0.4		Id: 1/1