RevNo	Revision note	25.02.2024	BKA	Checked

#	Name	Manufacturer	Quantity
1	AWG11		1
2	BD136G	ON Semiconductor	1
3	CAP200		1
4	CAP200		1
5	1N750A-1	Microsemi	1
6	GREEN LED		1
7	CFR25SJR-52-100R	Yageo	1
8	CFR25SJR-52-100K	Yageo	1
9	CFR25SJR-52-100K	Yageo	1
10	CFR25SJR-52-100R	Yageo	1
11	CFR25SJR-52-100K	Yageo	1
12	CFR25SJR-52-100K	Yageo	1
13	CFR25SJR-52-100R	Yageo	1
14	CFR25SJR-52-100K	Yageo	1
15	LM324AD	Texas Instruments	2

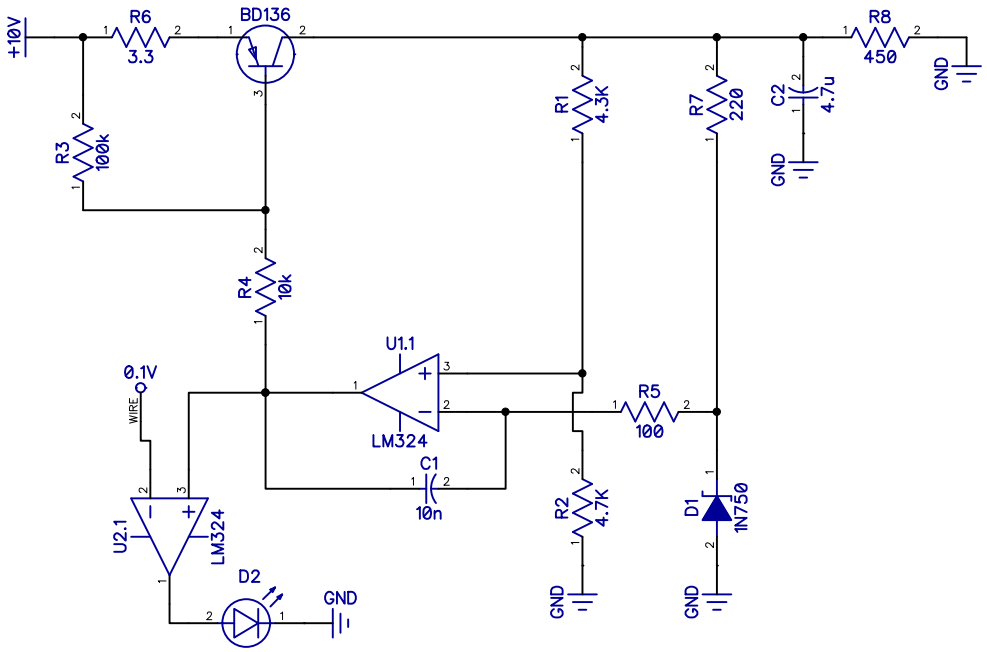

Low-Dropout Voltage		
Size	Number	Rev
25.02.2024	Bilge Kaan Ates	
Filename	Sheet	