2017 IEEE Region 10 Humanitarian Technology Conference (R10-HTC)
21 - 23 Dec 2017, Dhaka, Bangladesh

# Design of a Low Cost Anti-Theft Sensor for Motorcycle Security Device

M. M. Hossain
Department of Firmware
Relisource Technologies Ltd.
Dhaka, Bangladesh
monir.eee.buet@gmail.com

M. S. Islam
Lecturer
Barisal Metropolitan College
Barisal, Bangladesh
md.saiful84@gmail.com

N. F. Dipu
Design Engineer
Neural Semiconductor, DBL Group
Dhaka, Bangladesh
nusrat.buet11@gmail.com

Mohammad Tariqul Islam, Shaikh Anowarul Fattah, Celia Shahnaz
Department of Electrical and Electronic Engineering
Bangladesh University of Engineering and Technology
Dhaka, Bangladesh
mhdtariqul@gmail.com, fattah92@gmail.com
celiashahnaz@gmail.com

***Abstract*— This paper proposes the design of a low cost anti-theft sensor for motorcycle security based on detection of the rotation of its handlebar. An advanced motorcycle security device has also been developed on the basis of this proposed sensor. Currently, vibration sensors are used for motorcycle security purpose, which are very infuriating. In case of security device using vibration sensor, sometimes the jerking of a bike leads detection of thievery situation even though it is not the actual thievery case. But our designed sensor detects the thievery situation only when the handlebar rotates from left to right at a certain angle or vice-versa which really needs to be done to run a bike. Apart from the sensor, the overall device contains a GSM-GPRS module, micro controller, relay, buzzer, SOS button as well as other electronic components powered up by a lithium ion battery. Among the attractive functionalities, ignition can be controlled on armed or disarmed mode, provides the security related information, such as vehicle statuses like battery level, armed-disarmed etc. on user request via SMS, vehicle location based on cellular triangulation in offline mode and sends accidental statuses to owner and his/her relative. The proposed design of the sensor and the developed device is capable of providing security of a bike in both standing and running situations to keep it safe from thievery and snatching. Thus, a technology is provided that ensures the security for humanity. Such a low cost antitheft system can be of great help to the vendors in the rural area who use motorcycle for paddling from one place to another. The community requires constant use of their motorcycle and thus need a motorcycle security system that is robust and has minimal errors which our system provides successfully.**

***Keywords*— Microcontroller (MCU), Global System for Mobile communications (GSM), General Packet Radio Service (GPRS), Short Message Service (SMS), Ignition Control, Anti-Theft Sensor, Security Layers.***

## I. INTRODUCTION

Nowadays, vehicle thievery is increasing rapidly. Vehicles are being theft at parking lot and unsecured places as well as being snatched on highways. As a consequence, the security of humanity is being affected. People are worried about the safety of their high-priced vehicles. Currently, people are getting technology dependent. As a result, vehicle security systems are becoming essential day by day. Hence more efforts and research have been undertaken to develop such security devices. But most of them are mainly designed for car. There is really scarcity of efficient security system for motorcycle. Some recent works on motorcycle security have been mentioned here though they are limitedly reported.

RFID card is one of the most popular anti-thievery system for vehicle security. It is used to make the system computerized and smart. RFID cards provide secured access. But the safety of this card is sometimes questioned as it can be easily stolen. At the same time, key may malfunction on contact with metallic object causes another problem [1], [2]. Vibration sensors are also used to detect thievery situation by some researchers. The working principle of vibration sensors is based on piezoelectric effect. When the vibration of motorcycle crosses a threshold level, a thievery signal is generated in those devices [3]. Location tracking is another way to secure vehicles. In this system, GSM and GPS module are used together with an accelerometer and temperature sensor [4]. The module is used to track the vehicle. The accelerometer that

978-1-5386-2175-2/17/$31.00 ©2017 IEEE

contains the MEMS sensor offers a low pass filter which is utilized for shake, orientation and tap detection. Face detection is another popular idea among several researchers [5], [6], [7], [8]. In this process, image processing technology is implemented. The face of driver is captured by using a tiny web camera and compared it with the picture of authorized drivers to detect the intrusion most of cases. The web camera is set hidden in somewhere in the car to capture the picture of the driver and if it doesn't match with authenticated driver, MMS is sent to the owners. Whereas some proposed systems include finger print detection system along with face detection [9].

Security systems mentioned above are complex, costly and cannot be implemented on two wheelers. Two wheeler vehicles offer very less space to install the security module and so that area is one of the major constraints. The demand arises to design a system that performs necessary function, simple to operate, reasonably priced and small enough to be placed inside of the motorcycle.

The objective of this paper is to represent a low cost, suitable as well as robust device with our proposed design of anti thievery sensor for securing motorcycle. Multilayers of security are embedded in the proposed device to guard motorcycle with the sensor and reliable interfacing of GSM-GPRS technology [10]. All possible practical problems have been considered and analyzed while implementing the sensor and device. The proposed sensor design emerges as an efficient sensor that incurs low cost also. The device made with it provides a lot of attractive and efficient features. As a result, it's now easier to secure a motorcycle. Some of the functionalities of the device include, control of ignition during armed or disarmed mode, relaying security related status information, like battery level, sensor mode via SMS, also vehicle's location determination based on cellular triangulation and informing the owner and his/her relatives during accidents. We use cellular triangulation method to locate the vehicle instead of GPS. Because GPS signals are not available at everywhere. On the contrary GPRS signal is even found inside of a garage.

This low cost system can be of great help to rural people. It can be retrofitted in motorcycles that are under use. It has been designed keeping the locality of Bangladesh in mind where SMS services are quite ubiquitous [11]. Moreover, a particular user group, namely the paddlers, who use motorcycles to sell different components in the rural region, will be helped specially by the technology. The usage of vehicle security devices are minimal in the country due to the increased cost of the modern security systems as well as their unreliability. The system proposed in this paper provides a more reliable and robust security scheme at a low cost which will benefit the people.

## II. Overview of the Proposed Design of the Security System

The overall security system ensures the safety of motorcycle. The owner of the motorcycle can stand it up at anywhere and roam without anxiety by keeping the device in armed mode. When a thief comes to his/her motorcycle, at first he/she has to rotate the handlebar to align it. Our proposed sensor detects this rotation of the handlebar and sends a significant signal to the control board. The control board contains microcontroller, GSM module and other peripherals. Control board then recognizes it as a thievery situation. After that it buzzes loudly to warn the thief. Meanwhile, it sends this thievery situation to the owner of motorcycle via SMS. As soon as the owner gets the SMS, he can rush to the spot and claim the bike. Thus the system ensures the security of motorcycle. Multiple layers of security has been implemented. The overview of the system is shown in Fig. 1.

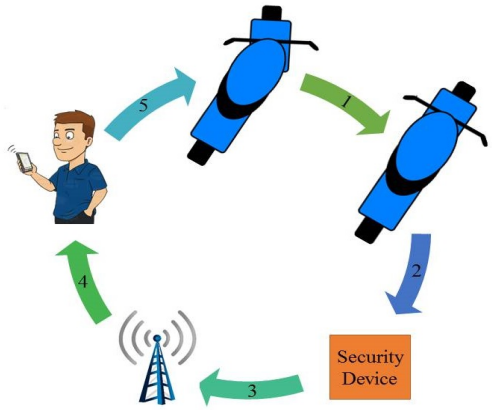


Fig. 1. Overview of Security System. 1) Handlebar is rotated from left to right. 2) Thievery signal is generated and sent to the device. 3) Device communicates nearest cellular tower to send SMS. 4) A warning SMS is sent to owner. 5) Owner is alert and takes over the bike.

## III. The Proposed Anti-Theft Sensor

### A. Construction

The construction of the sensor is done in a simplistic manner in which the sensor is given an inflated cylindrical shape. The curved surface of the cylinder is made of electrically conductive material. The other two circular surfaces are made of insulting material. A tip of a conductor is inserted into cylinder through the center of the circular surface

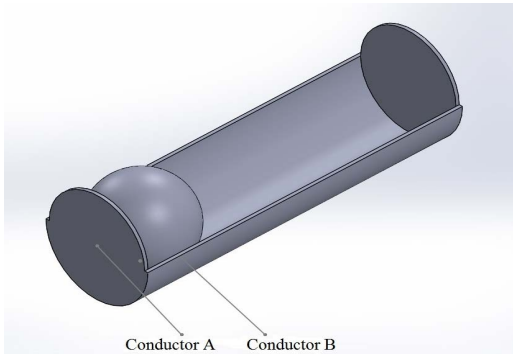


Fig. 2. Construction of the proposed anti-theft sensor. The conductive ball is adjusted inside the cylinder with conductive cylindrical surface and insulating rubber surface.

(Conductor A in Fig. 2). Another conductor is welded on the spherical surface (Conductor B in Fig. 2). A spherical and electrically conductive ball, which can freely move inside the cylinder, is installed. Rust proofing liquid is used on inside curved surface as well as on the ball to protect it from being rust and to reduce friction on its moving path. When the handlebar is inclined at some degrees from one direction to another, the ball travels from one side of the cylinder to another. As a result, the two conductors get connected with each other and make a distinctive signal. Thus the sensor works without misinterpreting theft detection sensing.

### *B. Design Parameters for Practical Implementation of Sensor*

The curved surface of the cylinder and the ball are made of steel. The circular bases on both side of cylinder are made of rubber. The outer diameter of the cylinder is 1 cm and the thickness is kept 0.1 cm for each surface. The length of our designed sensor is 2.7cm and the diameter of the ball which is kept inside the inflated cylinder is 0.75 cm.

### *C. Comparison of the Proposed Sensor with Other Renowned Sensors*

The nobility of our sensor is that it detects the rotation of the handlebar of motorcycle. As a result, there is almost no chance of having noise in signal compare to a vibration sensor. A vibration sensor detects the vibration of a motorcycle. There is a threshold level of vibration. When the amount of vibration crosses this threshold level, it detects a theft situation. But this signal is sometimes misinterpreted. Considering a situation in which a child is attracted by watching a wonderful motorcycle. He/she may touch even try to jerk by holding the body. This may create a thievery signal by a vibration sensor. It's almost impossible that a child can rotate the handlebar of the motorcycle so easily. Similar thing happens in case of motion sensor. The motion sensor detects the motion of nearby of the motorcycle. This creates sometime irritating false alarm for the owner. In addition, some other security devices are made based on the processing of the image of the driver of the vehicle. But motorcycle doesn't have enough space to contain this type of large device. This kind of security device is more suitable car. For this reasons, our proposed sensor is perfect to serve the purpose of motorcycle security.

## IV. Proposed Circuit Design of the Security Device

The device provides security for a long time at a stretch even when the acid battery (12V) of bike is drained out. A lithium ion battery (4.2V) has been used for this purpose. A voltage regulated circuit is designed to charge the battery. A microcontroller (MCU) is the heart of the device. All peripherals and GSM-GPRS modem are interfaced with a microcontroller (MCU). A loud buzzer is used in the system to warn the thief and nearby folks. Microcontroller sends a signal to the base of the transistor and it is turned on to provide necessary current to buzzer. When a thievery situation occurs, our designed sensor generates a signal and sends it to interrupt pin of MCU. The signal can be generated also from unauthorized key insertion and cutting off the power cable.

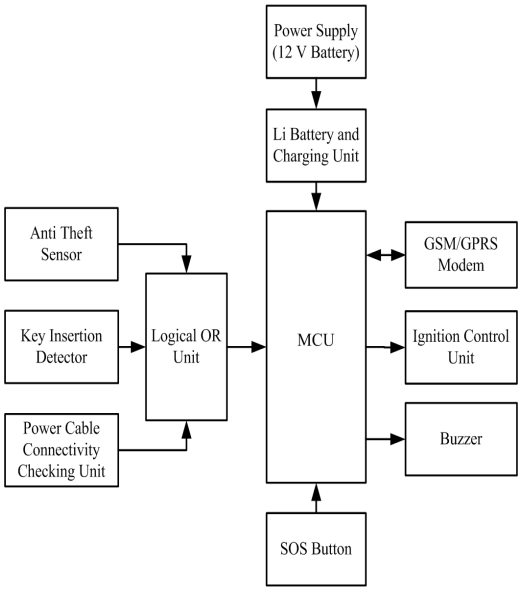


Fig. 3. Proposed Circuit Design of the security device.

An extra wire is drawn with the power cables from the acid battery to the device and it's grounded. When a thief cuts off the power cables, there is a possibility to be cut off that extra cable also. A thievery signal is generated for this reason in armed mode of device. Again another cable is used to identify the unauthorized key insertion. This cable is connected to ground when the key is inserted, otherwise it's open. When a thief inserts a key in armed mode, that cable gets connected to ground and thus a signal is generated for processing. A circuit unit has been designed based on transistor to perform logical OR operation. Using this various possible sources of identifying thievery situation, the device sends signal to the interrupt pin of MCU. A locally available easily deployable GSM-GPRS modem is interfaced with microcontroller. When the microcontroller receives this signal, it communicates with GSM module and sends warning SMS to owner. GSM module has been interfaced with microcontroller with according to the suggesting circuit by the manufacturer. A relay is used to control the ignition of the bike. Microcontroller sends signal to base of a BJT transistor that drives this relay. The proposed circuit design has been illustrated in Fig. 3.

## V. Firmware Development

At starting by the power button, MCU configures its I/O pins, ADC, timer, watchdog timer, hardware interrupt and UART protocol at baud rate of 9600. MCU communicates with modem by sending recognized AT commands through UART protocol. MCU communicates GSM-GPRS module to initialize its general settings as well as Internet settings by sending corresponding AT commands. MCU loads all user contacts from the modem. If all settings and configurations are done successfully, it acknowledges it to owner via a SMS. If the initialization is failed, MCU resets itself through a watchdog timer until it succeeds. Then both of MCU and modem are sent to sleep mode to save power. Any kind of interrupt can wake up the MCU. Meantime, modem can wake up from a SMS, a

call or a command request from the MCU. If there arises a thievery situation, that signal generates a hardware interrupt request at MCU's external interrupt pin. It then immediately starts to buzzes and sends SMS owner and his/her relative following up a call to the owner. There may arise a snatching situation while bike is running. If the owner presses the SOS button while snatching, MCU turns on a timer and keeps counting until it passes one minute. Then MCU cuts off the ignition line by pulling down particular pin to stop the bike and sends a warning SMS to owner's relatives with the current location. Again, MCU wakes up at after each three minutes. This time is counted by an internal timer of MCU. It checks the SIM connectivity and modem hanging issue. If it finds the modem hanging, it resets and reconfigures the modem. Again, SIM card may get disconnected at heavy jerking of bike. MCU identifies it by sending an AT command to modem. If it finds SIM card disconnected, it sends AT command to reconnect it to network. Waking up at each thirty minutes interval, MCU checks the voltage level of the main power supply by its ADC pin. If voltage is measured low (less than 9Volt), MCU sends a warning SMS to owner.

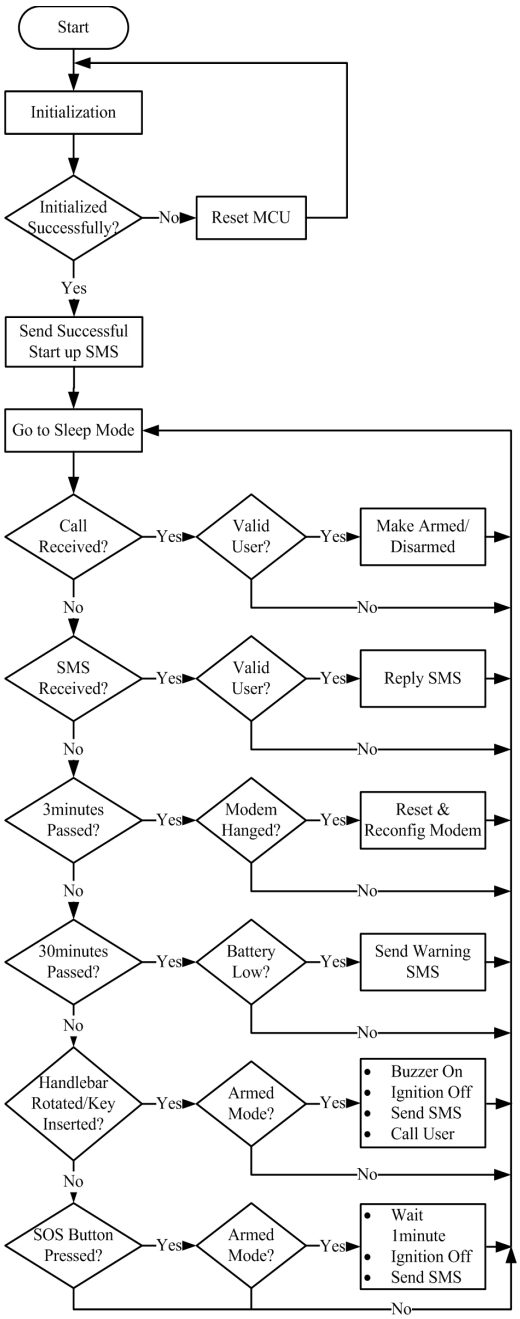


Fig. 4. Proposed flow chart for the security device.

The firmware is developed in a power optimized way by efficient usage of interrupt signals, so that the device draws very low current from the main supply. MCU and GSM-GPRS modem remain in deep sleep mode usually and only an interrupt can wake up them. After doing each operation, MCU goes to sleep mode along with the modem. The firmware checks all kind of hanging issues and solves this efficiently. It's so optimized intelligently so that it occupies less memory space. A flow chart of the firmware has been shown in Fig. 4.

## VI. Proposed Security Device Installation

In order to keep harmonization between sensor and the device, the device should be installed in a safer place. As motorbikes possess narrow space, the device is safe under the driver's seat (see Fig. 5). There are several reasons for selecting this position. It takes much time to uncover a seat for a thief as well as it's a hidden place. Again, water drops or rains can't damage the device under the seat. The region over the device is transparent for cellular signals. As it's placed at far away from engine, the device faces less electromagnetic interferences. The SOS button is hidden near the right brake under the hand grabber so that nobody can see it usually.

Fig. 5. Installation of the proposed security device. Anti-theft sensor installation in indicator light box (Left). Placement of device under seat cover (Right).

The main sensor is tightly retained with glue inside an indicator light box. So, it can't move even if motorcycle jerks heavily. The sensor is connected to the device through wiring inside the bike. When the handlebar is aligned towards its body, the sensor is tilted 30$^{o}$ with the horizon from left (see Fig. 6).

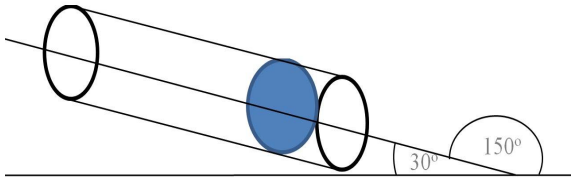


Fig. 6. Inclination of the sensor when handlebar is aligned toward its body.

At this situation, the ball which is kept inside of sensor is rightly adjusted. The owner may keep the handlebar tilted at left side normally while he/she parks it somewhere. At this situation, if the handlebar rotates more than 30˘ from straightforward position to left, the ball adjusts at left most. As a result, when someone rotates the handlebar more than 30˘ from left to right, the ball inside the sensor adjusts from left to right most position and conducts. Henceforth, an alarming signal is generated. If the owner has to keep the bike tilted at right side normally, he/she has to set the sensor tilted by 30˘ with the horizon from right then. Again, a valid SIM card supporting GSM900/1800 is inserted into SIM slot with the activation of internet. Previously mentioned that the device is designed to draw low current and it is measured 11mA in average when the device is developed.

## VII. Technical Benefits

Technical benefits can be realized from the functionalities of device in terms of security layers, armed mode, disarmed mode, alarm system, status acknowledgment and user safety consideration.

### A. Security Layers

The device has multiple layers of security. **Firstly**, if thief wants to cut off the power line that goes from battery of the bike to the device, an alarm is triggered. **Secondly**, if thief tries to insert key in armed mode, the device generates an alarm. **Thirdly**, the thief needs to rotate the handlebar to take it away to somewhere, an alarm is triggered for detecting the rotation of handlebar by our proposed sensor. **Fourthly**, when someone attacks a motorcycle to snatch it, owner should get down from the motorcycle by pressing the hidden SOS button to save his life. Then the device stops the motorcycle automatically after a minute. The snatcher doesn't have any way without leaving the motorcycle where it stops. Thus the device secures both of the owner and the motorcycle. **Fifthly**, a situation may arise that someone snatches a motorcycle by pushing the owner from it. In this situation, owner has a chance to stop the car by sending a specific SMS. **Sixthly**, suppose someone snatches both of motorcycle and mobile phone from the owner. In this case, its also possible to stop the motorcycle. The owner needs to asks his/her relative whose numbers are saved into the device to send a specific SMS. The device cuts off the ignition immediately when it receives that SMS.

### B. Armed Mode

User has to arm the device to secure it. He may arm it by either a call or a SMS. The device calls the user to acknowledge him about activation. Again, device may fail to call the user. In this situation, user can also be confirmed about his activation hearing two beeps.

### C. Disarmed Mode

User needs to disarm the device to run it. He may disarm it by either a call or a SMS. The device sends deactivation acknowledgement in case of command received by a SMS. In case of call activation, the device doesn't call or send SMS to user. In both of this situation, user has an option to be confirmed about his activation hearing a beep.

### D. Alarm System

When, there raises a theft situation, a siren turns on loudly. The owner and his/her relatives receive a SMS and call and gets concerned about the conditions of the bike. The siren doesn't buzz on the situation of snatching.

### E. Status Acknowledgment of Device

User has some options to know whether the device is armed or disarmed. User can also have the instant location based on cellular triangulation requesting by a SMS. The device creates a HTTP link with latitude and longitude obtained from cellular triangulation and sends it to owner's mobile number through SMS. Battery level is also available to gather by sending a SMS.

### F. User Safety Consideration

This device is designed in such a way that user gets it very convenient. Normally the device goes to disarmed mode when it's turned on. Motorcycle should be taken into disarmed mode to start it. For any kind of unexpected reason such as turning off the device due to battery damaged, the owner may face an accident if the device cut off the ignition line. To protect the driver from this kind of accident, the device keeps the ignition on.

## VIII. Cost Analysis of Proposed Sensor

Our proposed sensor incurs a very low cost. It's made from rubber, metallic ball and cylinder. Copper is used as conductor for the two terminals. The rubber and metals used in the sensor are very low in amount. Thus it becomes very light weight. It weighs ten grams only. The used materials are available and not so expensive. As a result, the sensor estimates very low cost compare to other sensors that are used for thievery detection in security devices. For better understanding, a comparison of costing of our proposed sensor with other sensors with prices available at online is shown in TABLE I.

Again, a powerful processing unit is required for interfacing other sensors. As a result, device cost increases. But our sensor works with low grade processor (MCU). Thus cost is minimized in our proposed security device.

TABLE I. COST OF VARIOUS SENSORS

| Item | Price (USD) |
|---|---|
| RFID Reader | 25 |
| Camera Module | 10 |
| Vibration Sensor | 1.5 |
| Finger Print Sensor | 25 |
| Accelerometer Sensor | 7 |
| Proposed Anti-Theft Sensor | 0.08 |

## IX. HUMANITARIAN IMPACT TO SOCIETY

One of the most important factor of the system is the proposed anti-theft sensor. The sensor is made such that it can be retrofitted existing motorcycles. Due to the low cost of the sensor as well as the security system, the people who currently do not have a motorcycle security system can adopt this viable option. As stated earlier, the rural people who use motorcycle to earn daily wages, like the paddlers, need it the most. We have observed that, these people do not use antitheft system however express the need for it. One of the reason they do not adopt such system is because the systems often require technologies that are out of reach of such areas and thus they perceive such systems as unreliable. However, our proposed system uses the technology that are already available in these areas and thus can be easily retrofitted with the existing technologies. The users can use the technology from the convenience of their existing mobile phones to operate the security device. Additionally, being a more robust sensor with low cost, it is a viable option for them.

## X. CONCLUSION

In this paper, we proposed a new sensor for two wheelers like motorcycles which can be built at minimal cost. It has been tested that the sensor is robust and provides reliable information on usage of the motorcycle. The anti-theft system based on the sensor provides essential security information through SMS. The location of the bike is generated based on cellular triangulation and thus can be of great use in rural areas. Because, the device can be retrofitted in a motorcycle, it can be readily implemented in many of the motorcycles at a low cost. Thus we believe that the device is of great help to the people, especially the rural paddlers, who require a highly reliable and low cost security system as a daily driver.

## REFERENCES

[1] Upendran Rajendran and Albert Joe Franscis, “Anti theft control system design using embedded system,” Proc. IEEE, vol. 85, pp. 239-242, 2011.

[2] Ms.S.S.Pethakar, Prof. N. Srivastava and Ms.S.D.Suryawanshi, “RFID,GPS and GSM Based Vehicle Tracing and Employee Security System,” International Journal of Advanced Research in Computer Science and Electronics Engineering, (IJARCSEE), vol. 1, Issue 10, pp. 91-96, December 2012.

[3] Hu Jian-ming, Li Jie and Li Guang-Hui, “Automobile Anti-theft System Based on GSM and GPS Module,” Fifth International Conference on Intelligent Networks and Intelligent Systems (ICINIS), pp.199-201, 1-3 Nov. 2012.

[4] Pritpal Singh, Tanjot Sethi, Bunil Kumar Balabantaray and Bibhuti Bhushan Biswal , “Advanced Vehicle Security System,” IEEE Sponsored 2nd International Conference on Innovations in Information Embedded and Communication Systems (ICIIECS), pp. 1-6, 2015.

[5] V. Balajee Seshasayee and E. Manikandan, “Automobile Security System Based on Face Recognition Structure Using GSM Network,” Advance in Electronic and Electric Engineering. ISSN 2231-1297, vol. 3, Number 6, pp. 733-738, 2013.

[6] D.Narendar Singh and K.Tejaswi , “Real Time Vehicle Theft Identity and Control System Based on ARM 9,” International Journal of Latest Trends in Engineering and Technology (IJLTET), vol. 2, Issue 1, pp. 240-245, January 2013.

[7] J. Shankar Kartik, K. Ram Kumar and V.S. Srimadhavan, “Security System with Face Recognition, SMS Alert and Embedded Network Video Monitoring Terminal,” International Journal of Security, Privacy and Trust Management (IJSPTM), vol. 2, No. 5, pp. 9-19, October 2013.

[8] S. Smith and J. Brady, “Asset-2 real-time motion segmentation and shape tracking, “ IEEE Trans. PAMI, 17(8), pp. 814-820, 1995.

[9] Iman M. Almomani, Nour Y. Alkhalil, Enas M. Ahmad and Rania M. Jodeh, “Ubiquitous GPS Vehicle Tracking and Management System,” Proc. IEEE Jordan Conference on Applied Electrical Engineering and Computing Technologies (AEECT), pp. 1-6, 2011.

[10] W. C. M. Hsiao and S. K. J. Chang, “The Optimal Location Update Strategy of Cellular Network Based Traffic Information System,” Proc. Intelligent Transportation Systems Conference, Toronto, pp. 248-253, 2006.

[11] J. M. Nupur, “E-banking and customers satisfaction in Bangladesh: An analysis”, International Review of Business Research Papers, 6(4), 145-156.