Design and Implementation of Microcontroller Based Anti-Theft Vehicle Security System using GPS, GSM and RFID

Abu Taher Noman[1], Samzad Hossain[2], Md. Shariful Islam[3], Mohammad Emdadul Islam[4],
Nawsher Ahmed[5] and M A Mahmud Chowdhury[6]
Electrical and Electronic Engineering (EEE), International Islamic University Chittagong (IIUC) Chittagong, Bangladesh
atnoman@yahoo.com[1], sazzad.emdad@gmail.com[4]

***Abstract*— Stealing the vehicle is the major threat to car or vehicle owners. Nowadays, it is increasing day by day. If not recovered soon, stolen vehicle are generally sold, revamped or even burned, if the resale price is considered to be too low. When a vehicle is stolen, it becomes hard to locate and track it, which considerably decreases the chances of recovering it. An Anti-Theft vehicle security has been developed to mitigate this problem. This system consists of a PIC16F876A microcontroller, fingerprint, RFID, GPS-GSM modules and a tilt sensor. The car will be started with RFID or fingerprint or password. If an unauthorized person wants to open the door of the vehicle, it will ask for correct RFID or password or fingerprint. The tilt sensor is used to measure any breaking of windows or doors and movement of the vehicle, a message will be sent to the owner's mobile containing the location of the car via GPS-GSM module. The system gives also an alarm. Furthermore, the connection to the fuel injector of the car is deactivated to prevent the unauthorized start of the vehicle anyhow. This anti-theft security system enhances the chances of recovering the car.**

Keywords*— *Microcontroller, GPS, GSM, RFID, Anti-Theft

I. Introduction

Automation is now a blessing for modern life. Almost every industrial work is done by robots or programmable logic controllers (PLC). As the increasing in the number of Automobiles on the road, the crime involving it also increased like automobile stealing. Indeed, even with enhanced automobile protection systems and expanded mindfulness among automobile proprietors, automobile burglary has not yet been checked down to a noteworthy measure. A straightforward patching up of the vehicles outside makes it difficult to track the stolen vehicle thus only a few vehicles are recovered. To protect the precious vehicle, proprietors are currently being compelled to spend huge amount of cash on vehicle protection.

Ashwini et al. [1] presented a Vehicle Security System based on GPS and GSM to track the vehicle in vehicle tracking systems Global Positioning System technology is used for finding the location of the vehicle.

Vidya Sagar V.Mulge et al [2] developed an embedded system based on the Global Positioning System, the GPS, and Radio frequency identification technology is developed to prevent the automobiles from theft.

A. Rajasekhar et al [3] projected a system to appreciate continuous observance and tracking the location of cargos or product loaded on board for digital supplying. RFID and GPS technology combined during this system. a low power 16-bit RISC microcontroller is employed because the central processing unit considering each tiny size and high efficiency. The Loaded cargos are recognized automatically by the terminal system of the vehicle, the real-time vehicle location, the information and voice communication, and continuous observation. Combination of RFID and GPS increases the accuracy, efficiency of the system.

Anti-theft security system requires real fast time identification, the strong door control and the strong security system which is provided to stop the ignition of vehicle, message conveying ability to owner of the vehicle for unauthorized access with accurate vehicle location using GPS and GSM which uses serial communication. For completing this, a reliable system is designed to control the door with the help of the fingerprint, RFID [4]-[5] and password combination, give strong security system which immobilizes the vehicle, able to convey message to the owner for unauthorized access with accurate location vehicle using GPS and GSM technology. In this paper, an anti-theft vehicle protection system is developed to overcome the drawbacks which offer a completely autonomous operation.

II. Literature Review

A combined GPS-GSM system is proposed to track vehicles using Google Earth application shown by Mohammad A. Al-Khedher et el. [6]. The remote module envelops a GPS attached on the moving vehicle to recognize

its blessing position, and to be changed by GSM with entirely unexpected parameters gotten by the auto's information port as a SMS to a recipient station. The got GPS masterminds are filtered using a Kalman channel to update the accuracy of estimated position. After data getting ready, Google Earth application is used to see the present zone and status of each vehicle. This goal of this structure is to direct naval force, police cars transport and vehicle robbery cautions.

A paper on real time vehicle monitoring system presented by P. Muruganandham, R. Mukesh for the applications which require ceaseless area information of the car [7]. For getting the autonomous positioning system that can transmit the regional data logically, Active structures are generated. The device is a combination of GPS/GSM module and a SMS feedback system. Main hardware in the car unit is the GPS/GSM module and a remote tracking server.

A paper on the vehicle hostile to burglary system [8] introduced by Ganesh G.S.P, Balaji B and Varadhan T.A.S combination of several steps of insurance with one supplementing the other, as altered to the regular against robbery system where a specific system is just being utilized. This is one of the simplest vehicle protection system which works only using GSM technology apart from GPS system. The user can turn on and off the vehicle just by a SMS and the vehicles details will be sent to the nearest base station. Though the simple structure, it consumes more time to operate whole operation.

This paper [9] exhibited by Sangram Bana and Dr. Davinder Kaur; a novel radio recurrence distinguishing proof (RFID) based vehicle immobilizer system, which includes low hacking likelihood while saving the wellbeing of the travelers of the commandeered vehicle. The immobilizer utilizes the dynamic RFID innovation where the tag is created with nearly huge character sets. The accepting unit is brilliantly incorporated into three control circuits in the vehicle, to be specific, start circuit, control unit, and programmed adapt evolving system, empowering it to convey the vehicle speed down to zero of every a sheltered well-ordered way. The counter robbery auto security system proposed here was tried under various climate conditions and conceivable flag mutilation circumstances to confirm its dependability.

A constant automobile monitoring system introduced by Muhammad Adnan Elahi, Yasir Arfat Malkani and Muhammad Fraz, [10] proposed a Real-Time automobile monitoring system which obtains the automobile's area, the engine of the automobiles locked while unauthorized access attempt is found. The gathered data containing automobile location and access time then send to the user's phone. The system have no specific input method.

III. Methodology

The goal of this project is to develop an anti-theft security system which protects vehicle from theft. In this protect, a tilt sensor has been used which is used for detecting any tilt of the vehicle. PIC16F876A is a microprocessor. Here three switches are used for input.

Figure 1 shows the Functional block diagram of anti-theft security system of vehicle protection. When giving the correct password or correct RFID or correct fingerprint, the vehicle will start to run. At that the security system will be deactivated. When anyone gives the wrong password or wrong RFID or wrong fingerprint, the security will be activated, at that time engine switch is switched off. The vehicle does not move and the owner will get a message automatically with the help of GSM module. If anyone tries to pick up the vehicle, the tilt sensor detects the movement of the vehicle. The alarm will be switch on. The owner receives a message about the position of the vehicle through GPS.

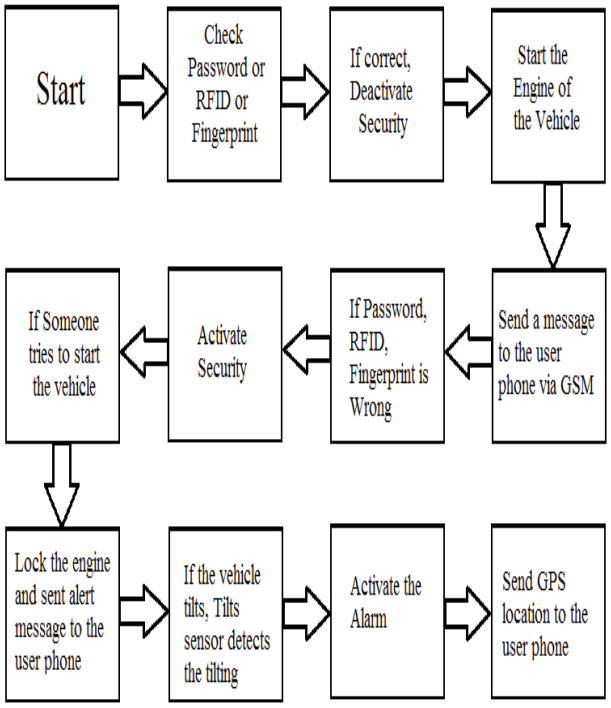

Fig. 1 Block diagram of anti-theft vehicle Protection System.

IV. Circuit Developement

Figure 2 shows an anti-theft security system which consists of a microcontroller PIC16F876A, 5 on off switch, a Double Pole Double Throw (DPDT) relay, a Double Pole Single Through (DPST) relay, 5V power supply module, ULN2003A IC, 4*3 keypad, buzzer, GPS, GSM module (SIM808), RFID module (RDM6300), Fingerprint module (GT511C1) , a tilt sensor & a LCD display. Pin 1 of microcontroller is used for master clear reset pin. The RA0, RA1, RA2 pin of microcontroller is connected with three on off switch named Password, RFID & Fingerprint for using as input. The RB0 microcontroller pin is connected to RS pin of 2*16 LCD display. The RW pin of LCD display is grounded. The RB1 pin of LCD display is used as the enable pin of LCD display. The RB4 to RB7 of microcontroller pin are connected with the pin of D4 to D7 for data pin. RC0 to RC3 of microcontroller are connected with the 4 rows of keypad.RA0 to RA2 pin of microcontroller are connected

with three columns of keypad for giving input. Here, The ULN2003A IC is used as a relay driver switch. Pin 1 and 2 of ULN2003A is connected with the pin RC5 & RC4 of microcontroller for driving DPDT. Pin 3 and 4 of ULN2003A is connected with RA4 & RA5. RB2 pin is connected with a junction of engine switch. RB3 pin is connected with a Tilt sensor. Pin 14 of ULN2003A IC is connected with a junction of buzzer .The another junction of buzzer connected with the power supply. Pin 13 of ULN2003A IC is connected with a junction of DPST . Another junction of DPST is directly connected with the 5v power supply. RC6 and RC7 is connected with pin 6 and 5 of Relay 1. Pin 1and 3 of Relay 1 is connected with the TX and RX of RFID module to microcontroller respectively. Pin 1 and 3 of relay 2 is connected with the TX and RX of GPS & GSM module .Pin 2 and 4 of relay 2 is connected with the TX and RX of Fingerprint module.

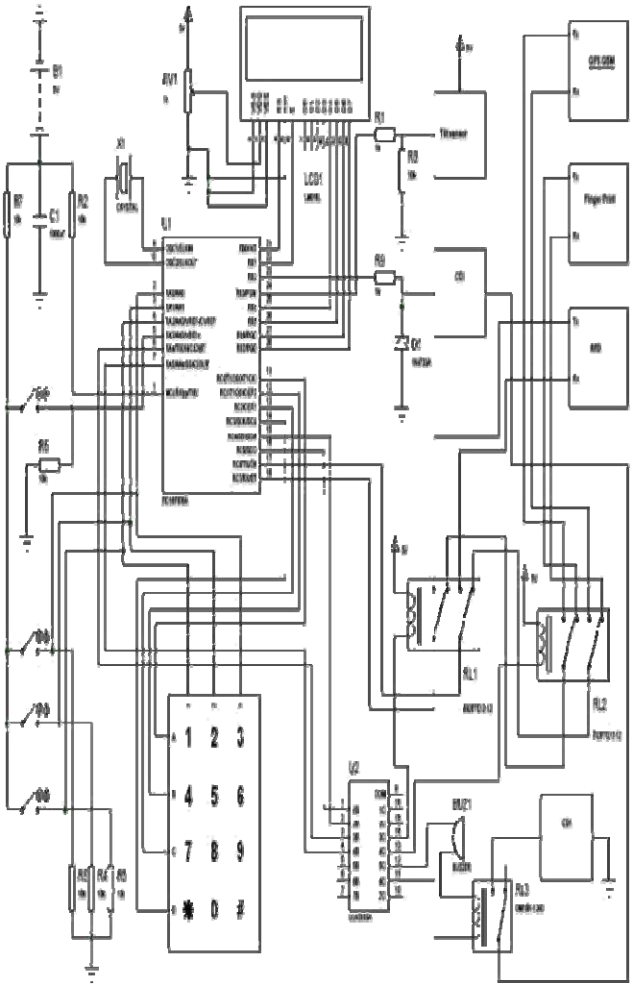

Fig. 2 Circuit diagram of anti-theft vvehicle pprotection system.

V. Operating Principle

This anti-theft security system basically two mode: Activated and Deactivated mode. Activated mode is where the security system of this device is activated. The door of vehicle can be opened by the three ways. They are password or RFID or fingerprint. The unauthorized person does not open the door of the vehicle when he will press wrong password or swap wrong RFID or imprint wrong fingerprint. The password will be given by the keypad. For giving password, this system checks the given password is matched or not. If the password is not matched, this system will detect that and will give a message to owner mobile with vehicle location by the GPS and GSM technology. Due to unmatched the fingerprint, this system senses it and a message will be sent owner's mobile with the position of the vehicle. If anyone swaps the wrong RFID tag, the RFID reader detects this and owner received a message with the location of the vehicle. Deactivated mode is the system security off mode. On account of matching correct password or correct RFID or correct fingerprint, the security system of device is deactivated. So, the owner is freely to start the vehicle.

VI. Algorithm Developement

Figure 3 below shows the flowchart of methodology to conduct the project.

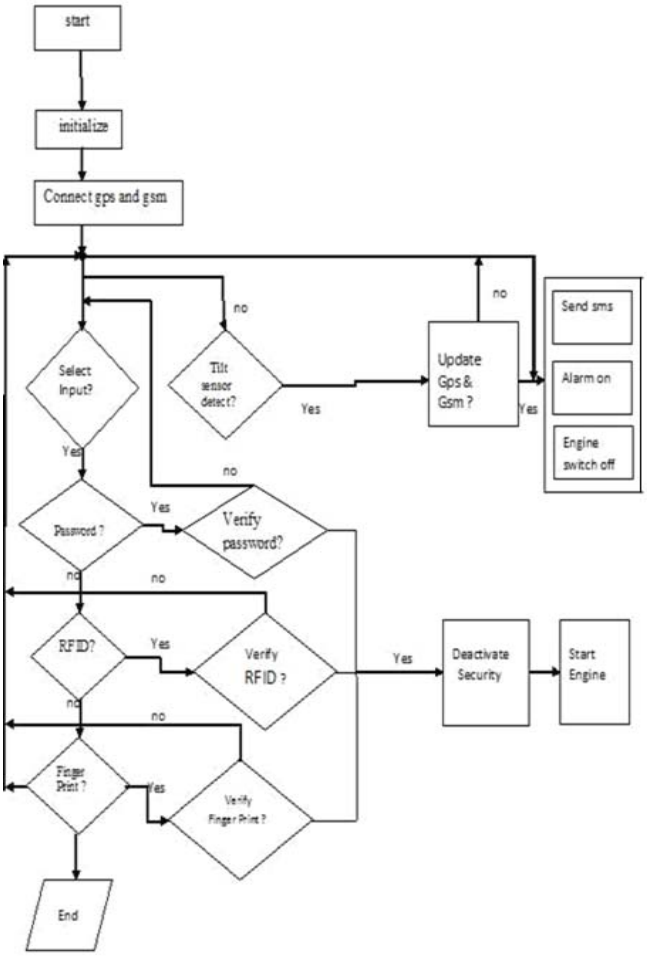

Fig. 3 Flowchart of the entire system.

After initializing, GPS and GSM module starts. If any input is selected, check if it is password, RFID or fingerprint. If corresponding security choice matches, the security system will deactivate. And the car will ready to start. If the corresponding security pattern violates, the system will lock the engine of the car and will send GPS coordinate to its owner. It will also give alarm notification. If tilt sensor reading is true, the device will also send its coordinate continuously to its owner.

VII. Result Analysis

As the outputs of the system are SMS and Alarm so there is no graphical representation. Figure 4 shows the overview of the system.

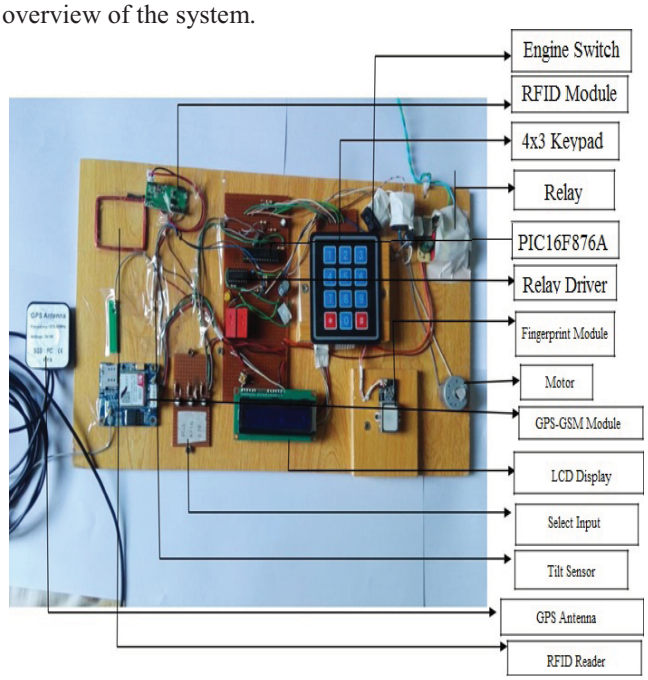

Fig. 4 Overview of the system.

Figure 5(a) shows which security choice will be selected (RFID/Password/Fingerprint). Figure 5(b) shows security choice for RFID.

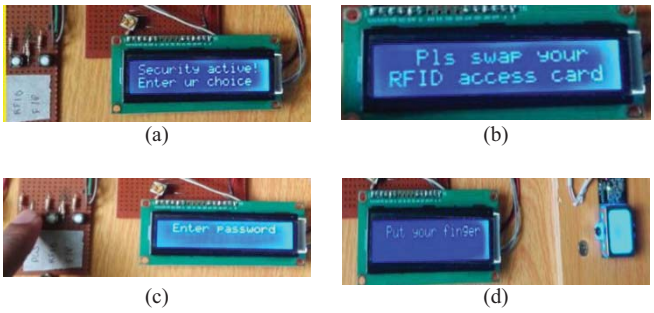

(a) (b)

(c) (d)

Fig. 5 Owner confirmation procedure (a) Security choice (b) When selecting RFID (c) When selecting password (d) When selecting fingerprint.

(a) (b)

Fig. 6 Alert to the owner during unauthorized access (a) Detecting location of the vehicle, (b) Sending location to the owner Phone.

When RFID is selected LCD display shows "Please swap your RFID access card". Figure 5(c) shows security choice for Password. LCD display shows owner to enter password. Figure 5(d) shows security choice for Fingerprint. LCD display shows owner to put fingerprint. If corresponding security choice matches, the security will be deactivated. If security choice does not match, it will alert the Owner of the vehicle by sending SMS. When wrong RFID is swapped or wrong password is pressed or fingerprint does not match this security system send a message to the owner mobile with tracking the vehicle location as shown in Figure 6.

VIII. Comparison with Previous Works

This GPS-GSM system [6] planned by Mohammad A. Al-Khedher et el. to track vehicles using Google Earth application. A GPS module is mounted on the remote module on the moving vehicle to separate its present position, and to be changed by GSM with totally unique parameters obtained by the vehicle's data port as a SMS to a recipient station. A Kalman channel filtered the GPS arrangements to update the precision of estimated position. After getting ready the data, Google Earth application is used to see the present zone and status of each vehicle. The significant disadvantage of the device is its complexity and costly enature. While this proposed system is less difficult and practical.

A vehicle terminal system is proposed [1] to acknowledge ceaseless observing and following the area of payloads or products stacked on board for advanced coordination. The installed outline of the terminal system is joins both the RFID with GPS advances. The vehicle terminal system can give the programmed distinguishing proof of freights stacked, the ongoing vehicle area, the information and voice correspondence, and constant checking. The outcomes determine that the mix of RFID what's more, GPS can give the unwavering quality of the system, which additionally enhance the exactness and productivity of computerized coordination administration. But the project only based on RFID whereas this proposed system has several security choices like Password, Fingerprint and RFID.

IX. Conclusion

This is a methodology of designing and grouping an affordable, theft control system for associate degree automobiles providing multiple input method where any one input method needs to match. This device is an ultimate treat to the thieves because any unauthorized access attempt will block the engine and ignition system of the vehicle.

However, making an anti-theft security system for vehicle protection with all necessary features is not possible due to some limitation including cost, availability of equipment and complexity of interfacing etc. Due to these limitations, all necessary features could not be added for developing the anti-theft security system. So this anti-theft security system has some future work:

Using Voice Recognizing technology, the door of the vehicle could be open by the voice of its Owner. This device can also be used in accident prevention system by using highly sensitive vibration system. If somehow an accident occurs then it will notice the location to the hospitals and nearest police station. Traffic system can be improved by this system by monitoring the location of the vehicle.

REFERENCES

[1] Ashwini Dilip Lahire, "GPS & GSM based vehicle tracking and security system," *International Journal of Engineering Research and Development*, Volume 12, Issue 6, PP.55-60 ,June 2016.

[2] V.Mulge, Mrs G. Sathyaprabha, Mr P.V.VaraPrasad Rao, "Anti-Theft Security System Using GSM, GPS, RFID Technology Based On Arm7," *International Journal of Research in Information Technology(IJRIT),* Volume 2, Issue 9,Pg. 764-769, September 2014.

[3] A.Rajasekhar reddy, P.Anwar basha ,"The Terminal System Design based on hybrid RFID-GPS in Vehicular communications," *International Journal of Modern Engineering Research (IJMER),* Vol.2, Issue.4, pp-2316-2319, July-Aug 2012.

[4] Finkenzeller and R. Handbook, "Radio-frequency identification fundamentals and applications," Chippenham: John Wiley & Son, 1999.

[5] S. Shepard, RFID: radio frequency identification. McGraw Hill Professional, 2005.

[6] Mohammad A. Al-Khedher, "Hybrid GPS-GSM Localization Of Automobile Tracking System," *International Journal of Computer Science & Information Technology (IJCSIT),* Vol 3, No 6, Dec 2011.

[7] P.Muruganandham, R. Mukesh, "Real Time Web Based Vehicle Tracking Using GPS", *World Academy of Science, Engineering and Technology*, 61, 2010.

[8] Ganesh G.S.P, Balaji B and Varadhan T.A.S, "Anti-theft tracking system for Automobiles," *IEEE International Conference on Anti-Counterfeiting, Security and Identification (ASID)*, pp. 17-19, 2011.

[9] Sangram Bana and Dr. Davinder Kaur, "Fingerprint Recognition using Image Segmentation," *International Journal on Advanced Engineering Sciences and Technologies",* Vol.No.5, Issue No.1, pp 12-23.

[10] Muhammad Adnan Elahi, Yasir Arfat Malkani and Muhammad Fraz, "Design and Implementation of Real Time Vehicle Tracking System*," 2nd International Conference on Computer, Control and Communication, Pakistan*, 2009.