Bluetooth Enabled Anti-Theft System Using Android Based Handheld Device

Vidhyotma, Jaiteg Singh, Dapinder Virk
Chitkara University Institute of Engineering and Technology, Chitkara University, Punjab, India
Vidhyotma.gandhi@chitkara.edu.in, jaiteg.singh@chitkara.edu.in, dapinder.virk@chitkara.edu.in

***Abstract*— Vehicle theft count comprises a major portion of the total incidents of crime today. The researchers and vehicle manufacturers throughout the world have been working on various theories to come up with a device that helps to curb this menace. The existing systems are beyond the limit of masses and thousands of vehicles are still being stolen daily. The Bluetooth-enabled cost-effective solution has been made to protect the vehicles. This paper attempts to utilize two physically disjoint units in conjunction with each other, an intention to provide a fool-proof mechanism against vehicle theft. A prototype was made using arduino, fingerprint sensor and Bluetooth. Android smart phones are being used to design for the user interface that allows access of the vehicle to an intended person only.**

Keywords—vehicle anti-theft, biometric, fingerprint, android-based anti-theft, Bluetooth based anti-theft

I. Introduction

Contemporary advancements in technology have not only contributed towards the omnidirectional development of global economy but have also resulted in some severe social challenges. Technology has played a significant role in global socio-economic setup thereby providing a stimulus towards higher living standards [1]. The advancements in the technical domain are too frequent to cope up with an average life span of machinery, which is built using that technology. Vehicles, in particular, happen to be a machinery which has catered to the needs of almost every probable domain that has resulted in overall global development [2]. Owners intend to keep their vehicles even beyond manufacturer's warranty, as they have invested a considerable amount of money in the purchase of the vehicle. Moreover, keeping a vehicle technically and mechanically updated as per the latest technological standards is considered to be an expensive and time-consuming affair. In this paper, we focus on existing vehicular security systems and their capability to avoid and prevent vehicle thefts.

As suggested by [3]–[5], a vehicular theft can be categorized into one of the following:

a) *Theft of an unattended vehicle without key:* In this scenario, a burglar takes away a parked vehicle by breaking windows panes of the vehicle or vehicular security systems are fooled by hotwiring using onboard diagnostic Port of the vehicle or by making use of key cloning kits. Bypassing the engine immobilizer simulators of the vehicle is another technique used by thieves to steal the vehicles.

b) *Theft with access to keys:* Here the intruder is either a known or a confidant of the vehicle owner. It is more or less a case of unauthorized use of vehicle rather than being a typical case of theft. However, this method also applies to thugs who after breaking into the car, find a spare set of keys in the glovebox. Being activated from a set of spare keys, it would be treated as an authorized access and the vehicle security system would not send an alarm.

c) *Opportunistic theft:* This type of theft happens when the owner of the vehicle left its vehicle unattended with keys within and ignition on.

d) *Carjacking:* It is considered to be the most violent and hazardous way to steal any vehicle. In this case, the vehicle is taken forcibly from the owner/ operator and may also result in an assault on the vehicle owner. In general, the operators and passengers are forced from the vehicle, while in other most serious incidents, the operator and/or passenger(s) are kept as hostages during the theft [6].

Prime issues associated with present day high-end systems for vehicular security are their high cost, complexity and dependency on the latest styles of vehicle fabrication technology. These modern security / anti-theft systems can't be directly installed into old vehicles. For instance, engine immobilizer cannot be directly installed into a vehicle without electronically assisted Engine Control Unit (ECU) [7]. Mobile phones, on the other hand, have not only become smart but are also equipped with a variety of sensors and features that could be easily used for a variety of purposes including theft prevention of vehicles.

In this paper, we have proposed an anti-theft mechanism for vehicles which is not only economically affordable but can also be deployed to almost any type of vehicle irrespective of its make, model and age. An attempt has been made to employ biometrics for authentication of a legitimate person. Each person has certain unique characteristics. These are known as biometric patterns and consist of DNA structure, facial characteristics, fingerprints, iris, DNA, retina, voice, palm print etc. [8]. Of these, fingerprint recognition is considered to be one of the most efficient and secure biometric for human authentication [9]. With instant pattern matching algorithms available today, fingerprint recognition modules have found place in most offices for maintaining automated attendance of employees.

This paper consists of five sections. The Introduction was given in section I. Section II reflects the related work done by previous researchers in the domain of vehicle anti-theft systems. The proposed solution, Bluetooth based -enabled vehicle anti-theft system using an Android-based handheld device is given in section III. Section IV concludes the research and the future scope is imparted in section IV.

II. Related Work

According to the previous work, the anti-theft security methods can broadly be categorized into automated and non-automated systems. A few of the non-automated and automated methods used to prevent car theft can be briefed

978-1-5386-7050-7/18/$31.00 ©2018 IEEE

as follows in Table I and Table II.

TABLE I NON-AUTOMATED METHODS FOR PREVENTING VEHICLE THEFT

Steering-wheel lock/ crook locks	This is one the most popular anti-theft technique. These locks go over the steering wheel and completely immobilize it [10], [11].
Gearshift locks	These locks clamp the gearshift lever of the vehicle while it is in reverse/parking gear, and prevent any gear shifts. Therefore, even if the vehicle engine is turned on, the vehicle cannot move [12].
Kill switch	This is a small switch that can be used to shut down a part of the engine's electrical system. The switch is usually installed in a manner that it is not clearly visible to the thief with an intention to prevent disabling it [13]
Hood locks	These locks prevent any unauthorized access to the car's parts under the hood, including the battery, thereby saving those from being stolen [14].
Tire locks	Tire locks are generally used by traffic police when a vehicle is found parked in no parking zone. These locks are quite visible and are a definite deterrent to the thieves. However, these locks are not the best option if one drives one's vehicle too frequently because using these locks is a very cumbersome process [15].
Brand parts with your VIN (Vehicle Identification Number)	VIN is a serial number assigned uniquely to your car, also known as the chassis number, VIN can be found on chassis of the car, your insurance and registration cards. The VIN is etched on the window glasses, as well as other important areas, such as under the hood, trunk door, battery, etc. Thieves find it a lot more difficult to sell the stolen parts that have VIN etched on them [3], [16].

III. PROPOSED SOLUTION

A vehicle anti-theft system based on Bluetooth and biometric technologies was designed to decrease the vehicle theft rate. A wireless control interface was created with help of Android application to remotely control the system. The technological and implementation details of the systems are given in forthcoming sections.

A. Materials and methods

- Ignition Control Mechanism (ICM)
  - GPS
  - GSM
  - Biometric sensor
  - Arduino uno
- Andro-Start – The Android App

TABLE II AUTOMATED METHODS FOR PREVENTING VEHICLE THEFT

Burglar alarms	Burglar alarms are very effective at drawing attention. These alarms are activated whenever there is an attempt to open locked doors, boot, and hood, and also if there is an attempt to remove the vehicle's tires [17].
Vehicle immobilizer	Even if the vehicle is started using the duplicate key, the systems are capable of cutting off the fuel supply/electric supply to the engine through electronic circuitry thereby ceasing the vehicle [7].
Vehicle tracking System	These systems employ GPS for tacking the lost vehicle. The transmitter unit is concealed within the vehicle and has a unique identification code. The unit is activated once the theft is reported. It is capable of sending real-time vehicle location to the central server by means of longitude-latitude coordinates, which can be used by the law enforcement agencies to track the vehicle [18], [19].

B. Theory/Calculation

The mechanism of the proposed anti-theft system is depicted in Fig. 1. The system comprises two disjoint modules. The first module, depicted in Fig. 2, comprises of an Android app that can be accessed through fingerprint scanning or by providing security password. It can be used for providing a security and theft protection to the automobiles, the human valuable asset. The Second module is a microcontroller assisted unit called ignition control mechanism (ICM) and is installed within the vehicle to control the ignition mechanism of the vehicle. The organization of ICM is shown in Fig 2.

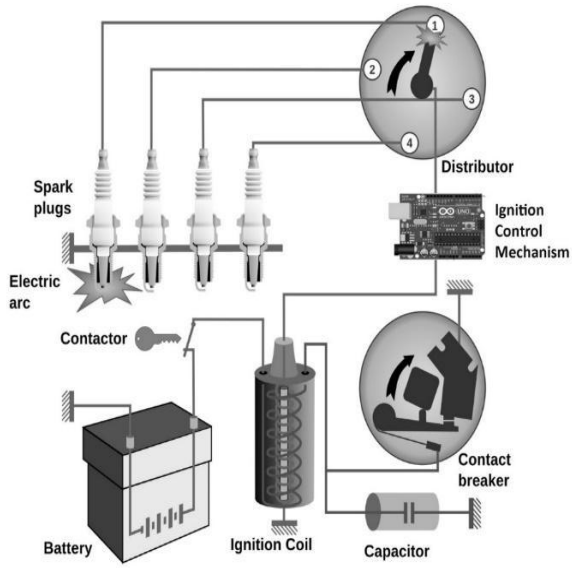

Fig. 1: Blueprint of proposed Anti-theft system

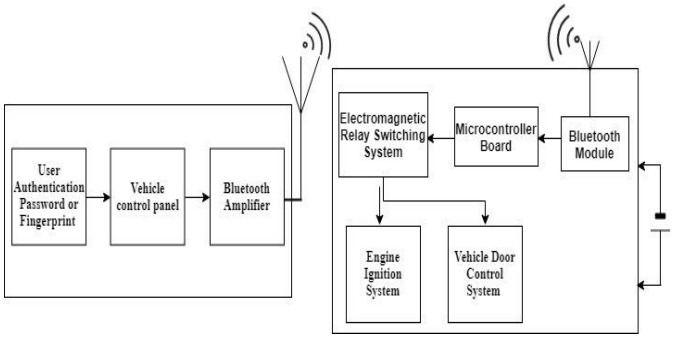

Fig. 2: Android device communication module and Ignition Control Mechanism (ICM)

C. Andro-Start – The Android App

The Android application used to control this entire system is named Andro-Start (A-S). The application can be installed on any mobile device running Android and having

an onboard Bluetooth module. Depending upon the features of the mobile phone, this application would authenticate the user either through an Android device's inbuilt fingerprint scanner or by providing the password. Once the application has been invoked, it has to be paired with the ICM fitted within the vehicle. Depending upon the need one or more devices can be paired with ICM. Once the option "connect to vehicle" is chosen, the Android device would send an encrypted detail of user along with Media Access Code (MAC) address to ICM. ICM would further validate the authentication details forwarded by Andro-Start. Once the information is validated, the ICM completed the circuit to allow ignition within engine block. The interface of Andro-Start is shown in Fig. 3 and Fig. 4 below:

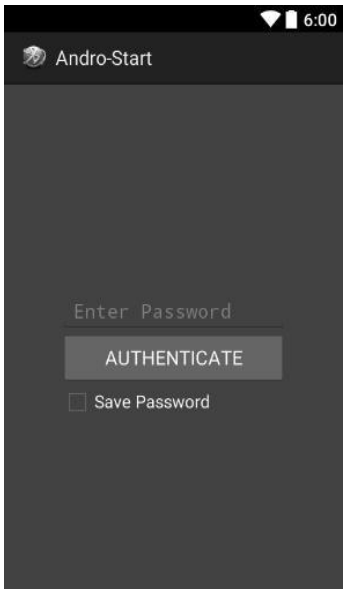

Fig. 3: User Authentication using A-S Application

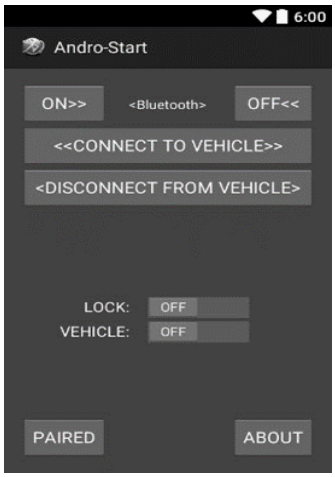

Fig. 4: Managing ICM through A-S Application

D. Ignition Control Mechanism (ICM)

The second module of this proposed system is a microcontroller assisted unit called ICM which is installed within vehicle to control the ignition mechanism. ICM is furnished with a serial Bluetooth receiver module, a microcontroller unit, electromagnetic relay switching units imbued to the vehicle's ignition system and central locking system. This module is equipped with a power source of its own, as it would remain operational even if the main battery power of the vehicle would be cut. The serial Bluetooth receiver would receive encrypted authentication details sent by Andro-Start application. This information is further compared for a match with the information already stored within ICM. Once there is a match, the microprocessor unit sends an "on" signal to the electromagnetic relay to complete the circuit. Once the circuit is complete, the ignition system would start the engine.

Traditional vehicle security systems depend on numerous sensors and are highly priced. In the event of the vehicle being stolen, no mechanism is available for tracking the vehicle. The main motive of this article is to keep the vehicle safe from any unauthorized access, using reckless, user-friendly, reliable and cost-effective fingerprint recognition mechanism. If the person is authorized, vehicle access is allowed otherwise the engine will be immobilized. The security system prototype model is built using low-cost Arduino microcontroller board that controls all the procedures. On higher end theft attempts like cutting battery power supply, protection to the vehicle is provided by ICM designed with Arduino.

- Anti-theft Technique - Although all existing vehicle anti-theft systems deter the thieves from lifting the vehicle, yet all of those systems face one common limitation, i.e. they do not provide a fool-proof technique to prevent vehicle theft. The proposed system, by virtue of employing biometric data of the owner or the authorized person for authentication, is capable of preventing vehicle theft [20]. The system is better than the contemporary automated methods for preventing vehicle theft since the latter are capable of either drawing attention of the public by activating hooters/alarms, or can help the law enforcement agencies to track the vehicle after it has been stolen. The alarms can be disengaged by the thieves in under one minute on gaining entry to the vehicle's cabin. The GPS trackers are also of limited use. By the time the vehicle is found, the costly parts of the vehicle such as the multimedia system, tires, costly upholstery, and even the items kept in the glove box are usually removed by thieves before abandoning the vehicle at a secluded place. The proposed system relies on biometric-authentication for initiating ignition [21]. Rather than just the capability to locate the vehicle, the system prevents starting the engine altogether, thereby thwarting any attempt to use the vehicle by unauthenticated persons.
- Testing - The prototype was tested by the developers by means of generating the ICM on a breadboard and obtaining input through the Bluetooth signals managed by the Android device. The android app authenticates the user by matching the biometric data (fingerprints) stored on the device. On successful authentication, the user can log in, and send control signals through Bluetooth signals. These control signals dictate the ICM, which was checked by using a relay switch which turned on/off an LED.

IV. CONCLUTION

Contemporary vehicle anti-theft systems have come a long way since the inception of such devices. However, none of those have proved to be fool-proof method against vehicle theft. The system proposed in this paper is capable of preventing vehicle thefts since the hardware is planned to be installed within the casing of the electric distributor, and shall allow a person to unlock the doors of the vehicle only when the person is authenticated through biometric verification. With no way to start the vehicle, it would be a better idea for the thief to abort the theft and leave the vehicle behind. The involvement of two disjoint units proves helpful in preventing thefts since thieves cannot start the engine without the availability of fingerprints of the authorized person.

V. FUTURE SCOPE

The proposed system suffers from a limitation owing to the fact that it relies on short-range Bluetooth signals for communication between an Android device and Ignition Control Mechanism (ICM). The prototype has also been designed that works accordingly. The limitations of this system are, it works only when the Android device is in the range of 0-10 meters from the ICM installed in the vehicle. Although, Additionally, the biometric (fingerprint) data of authorized persons is also saved locally in the Android device. Therefore, in case of an event of the Android phone malfunctioning, even the authorized person to access the vehicle won't be able to do so. An extended version of the proposed design shall be implemented in near future. The future version shall be capable of connecting to the internet, and all biometric and manual password data shall be stored over the secure cloud, in addition to storing it locally on the Android device. Therefore, even if the Android device is not available, the authorized person can use the vehicle by logging into the account over the cloud through any other Android device that has a fingerprint sensor.

In addition to the above, it is also planned that the ICM would be upgraded to work using the Global System for Mobiles (GSM) signals. This would allow the authorized persons to immobilize the engine by sending a command using short messaging service (SMS). By using GPS technology [22], [23], the vehicle can be identified very easily. Thus, the system provides security at both levels, i.e. when the battery supply is provided or not. This can be useful in case of vehicle being forcibly taken away by the unauthorized persons when the vehicle's engine was already running, and even when the Android device is also not in possession of the authorized person.

GPS integration with the ICM shall form yet another addition to the proposed system. Although the features discussed earlier would make the vehicle quite secure against thefts, yet in the event of carjacking, the authorized person can locate the vehicle by sending a specified command through SMS to the ICM, which in return would send back the GPS coordinates through SMS to the calling cell phone. Using those coordinates, the vehicle can then be located.

REFERENCES

[1] P. R. ButtePatil, "Technological advancements and its impact on humanity," 2012.

[2] I. Developer, "Technology's impact on the car industry," Optalerts, 2015. [Online]. Available: http://www.optalert.com/news/new-technology-impacting-the-automotive-industry. [Accessed: 09-Aug-2018].

[3] H. Copes and M. Cherbonneau, "The key to auto theft," Br. J. Criminol., vol. 46, no. 5, pp. 917–934, Sep. 2006.

[4] A. Roberts and S. Block, "Motor vehicle theft," in The Encyclopedia of Crime and Punishment, Hoboken, NJ, USA: John Wiley & Sons, Inc., 2015, pp. 1–3.

[5] L. D. Savitz, "Automobile theft," Journal of Criminal Law and Criminology, vol. 50, no. 2, 1959.

[6] "Different types of auto theft | Car theft types," [Online]. Available: http://www.autothiefs.com/different-types-of-auto-theft.html. [Accessed: 08-Aug-2018].

[7] J. C. van Ours and B. Vollaard, "The engine immobiliser: A non-starter for car thieves," Econ. J., vol. 126, no. 593, pp. 1264–1291, Jun. 2016.

[8] K. Zhang, J. She, M. Gao, and W. Ma, "Study on the embedded fingerprint image recognition system," in 2010 International Conference of Information Science and Management Engineering, 2010, pp. 169–172.

[9] S. Sebastian, "Literature survey on automated person identification techniques," Int. J. Comput. Sci. Mob. Comput., vol. 2, no. May, pp. 232–237, 2013.

[10] S. A. M. Bartels, "Locking device for steering spindle has locking element in form of claw gripping round steering spindle and able to be coupled to or uncoupled from housing," 01-Feb-2001.

[11] Maurizio Bonacini, "Device for locking wheel rims for vehicles on repair workshop machines, particularly tyre-changing machines or the like," 17-Jul-2012.

[12] D. Bandyopadhyay and J. Sen, "Internet of things: applications and challenges in technology and standardization," Wirel. Pers. Commun., vol. 58, no. 1, pp. 49–69, May 2011.

[13] Fred A. Wiehagen, "Vehicle protection system," Patent Application Number US5119065A, 1991.

[14] "Technological development." [Online]. Available: http://www.tcmit.org/english/exhibition/car/car03.html. [Accessed: 09-Aug-2018].

[15] Thomas Edward Wilson, "Tire lock," Patent Application Number Patent US5829285, 1997.

[16] R.Fiske and A. Surabian, "Motor vehicle operator identification and maximum speed limiter," 03-Jun-2011.

[17] T. Ozawa and S. Tanaka, "Vehicle antitheft device and control method of a vehicle," 25-Dec-2010.

[18] M. Sunitha, V. Vinay, and G. Raghu, "Embedded car security system," Int. J. Eng. Dev. Res., vol. 2, no. 1, pp. 3–7, 2014.

[19] V. K. Sehgal, S. Mehrotra, and H. Marwah, "Car security using internet of things," in 2016 IEEE 1st International Conference on Power Electronics, Intelligent Control and Energy Systems (ICPEICES), 2016, pp. 1–5.

[20] N. Kiruthiga and L. Latha, "A Study of Biometric Approach for Vehicle Security System Using Fingerprint Recognition," Int. J. Adv. Res. Trends Eng. Technol., vol. 01, no. 02, pp. 10–16, 2014.

[21] M. Saha, J. Chaki, and R. Parekh, "Fingerprint Recognition using Texture Features," Int. J. Sci. Res., vol. 2, no. 5, pp. 265–270, 2013.

[22] J. M. Hu, J. Li, and G. H. Li, "Automobile Anti-theft System Based on GSM and GPS Module," in 2012 Fifth International Conference on Intelligent Networks and Intelligent Systems, 2012, pp. 199–201.

[23] Montaser N. Ramadan and Mohammad A. Al Khedher, "An efficient automotive security system is implemented for anti-theft using an embedded system occupied with a Global Positioning System (GPS) and a Global System," 2012.