Do not write outside the box

0 5 This question is about electrolysis.

0 5 . 1 Some metals are extracted from molten compounds using electrolysis.

Why is electrolysis used to extract some metals?

[1 mark]

_____

_____

0 5 . 2 Aluminium is produced by electrolysis of a molten mixture.

What **two** substances does the molten mixture contain?

[2 marks]

1 _____

2 _____

0 5 . 3 Copper and chlorine are produced when molten copper chloride is electrolysed.

Complete the half equation for the reaction at each electrode.

[2 marks]

Half equation at negative electrode

Cu^{2+} _____ $\rightarrow$ _____

Half equation at positive electrode

$2\ Cl^{-} \rightarrow$ _____

Do not write outside the box

Figure 4 shows the apparatus a student used to electrolyse copper chloride solution.

Figure 4

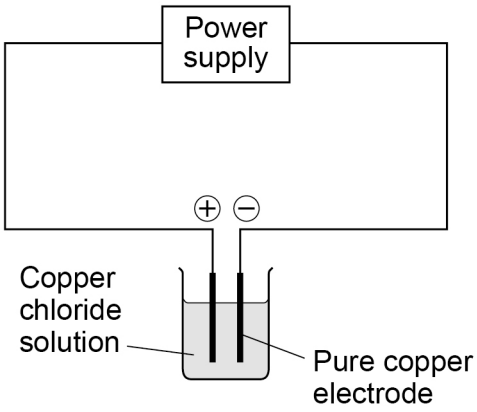

The student:

- measured the mass of copper deposited on the negative electrode after 60 minutes
- compared the mass deposited with the expected value.

0 5 . 4 Suggest **two** reasons why the mass deposited was different from the expected value.

[2 marks]

1 _____

_____

2 _____

_____

Question 5 continues on the next page

Do not write outside the box

0 5 . 5 **Figure 5** shows the expected mass of copper produced each minute.

Figure 5

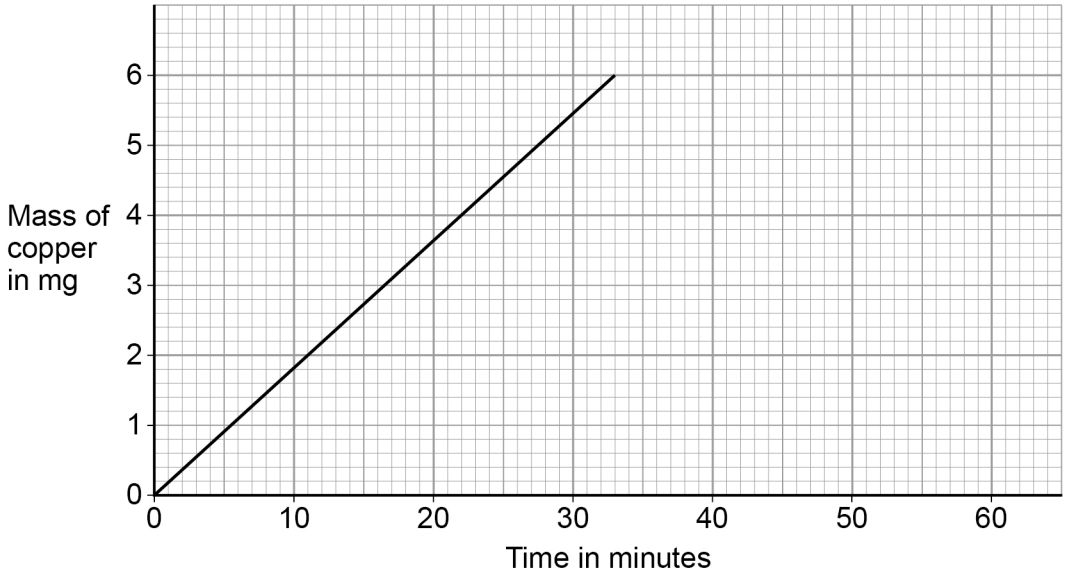

Determine the expected mass of copper after 24 hours.

Use **Figure 5**.

[3 marks]

Mass = _____ mg

Do not write outside the box

Silver nitrate solution is electrolysed.

Figure 6 shows the change in mass of the negative electrode over 10 hours.

Figure 6

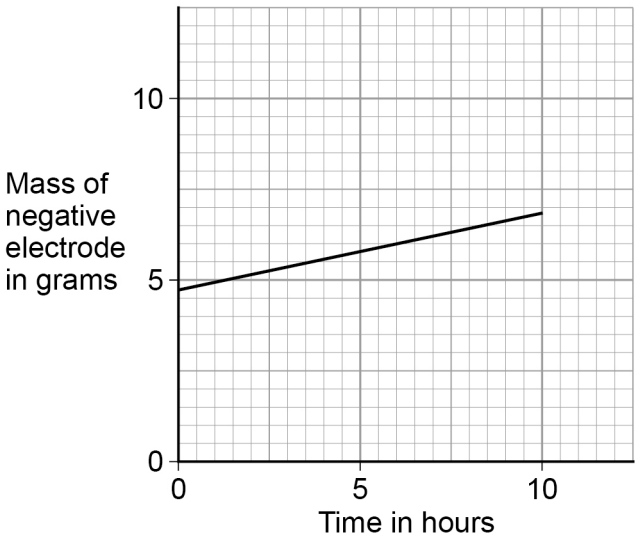

0 5 . 6 Determine the mass of the negative electrode at the start of the experiment.

Use **Figure 6**.

[1 mark]

_____

0 5 . 7 Calculate the gradient of the line in **Figure 6**.

Give the unit.

[3 marks]

_____

_____

_____

_____

_____

_____

Gradient _____

Unit _____

14