Do not write outside the box

0 4 . 1 Draw **one** line from each type of variable to the correct example of the variable in this investigation.

[2 marks]

Type of variable	**Example of variable**
	Concentration of sodium thiosulfate solution
Dependent	Temperature of reaction mixture
	Time taken for the cross to no longer be seen
Independent	Volume of acid
	Volume of the flask

Question 4 continues on the next page

Do not write outside the box

0 4 . 2 The experiment is done at room temperature.

Figure 7

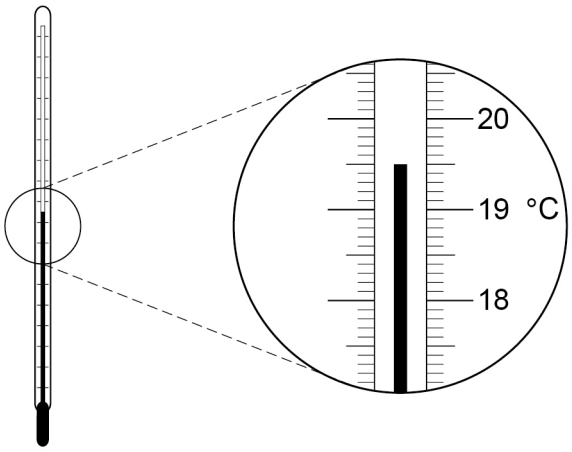

What is the temperature shown on the thermometer in **Figure 7**?

[1 mark]

Temperature = _____ °C

Table 1 shows the student's results.

Table 1

Concentration of sodium thiosulfate solution in mol/dm^3	Time in seconds
0.1	82
0.2	40
0.3	20
0.4	13
0.5	10
0.6	8

Do not write outside the box

0 4 . 3 Plot the data from **Table 1** on **Figure 8**.

Draw a line of best fit.

[3 marks]

Figure 8

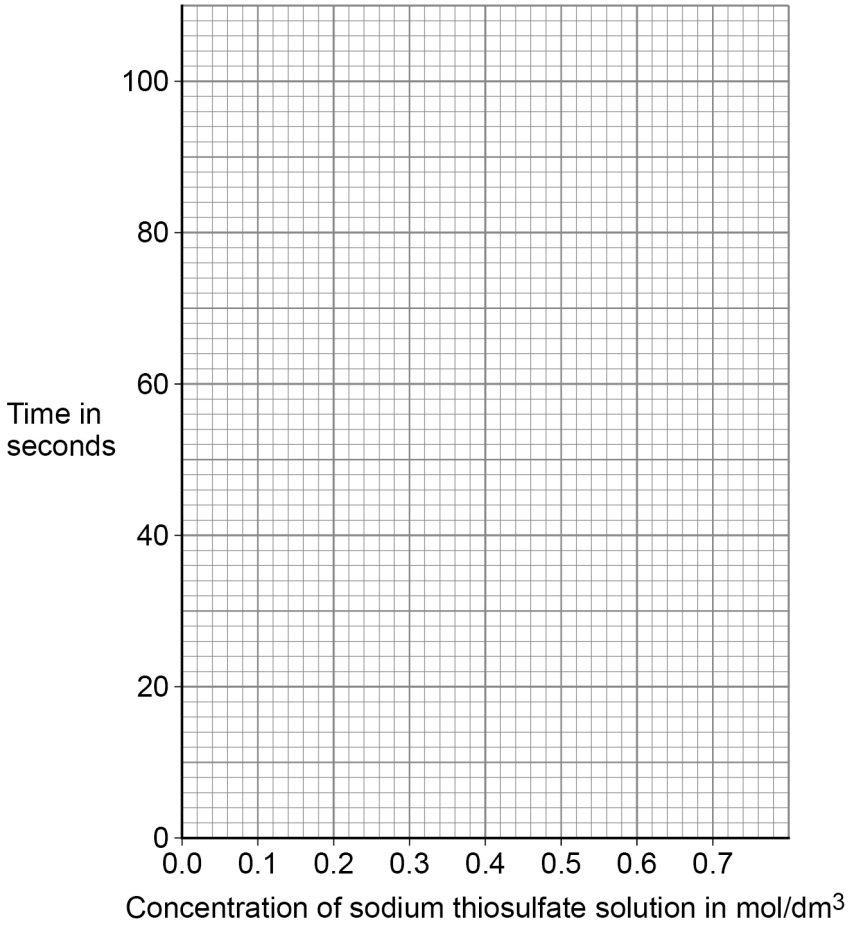

0 4 . 4 Predict the time taken for the cross to no longer be seen at a concentration of 0.7 mol/dm^3

Use your graph in **Figure 8**.

[1 mark]

Time = _____ s

0 4 . 5 Complete the sentence.

[1 mark]

As the concentration of sodium thiosulfate solution increases, the time taken for the cross to no longer be seen _____ .

Turn over ►

Do not write outside the box

0 4 . 6 In one experiment 0.725 g of sulfur is produced in 20 seconds.

Calculate the mean rate of the reaction from 0 to 20 seconds.

Use the equation:

$$\text{mean rate of reaction} = \frac{\text{mass of sulfur produced in grams}}{\text{time in seconds}}$$

[2 marks]

Mean rate of reaction = _____

0 4 . 7 What is the unit for the mean rate of reaction calculated in Question **04.6**?

[1 mark]

Tick (✓) **one** box.

g ☐ g/s ☐ s ☐ s/g ☐

Do not write outside the box

0 4 . 8 The student did the experiment with 0.15 mol/dm^3 sodium thiosulfate solution and repeated the experiment three more times.

Table 2 shows the results.

Table 2

	Test 1	**Test 2**	**Test 3**	**Test 4**
Time in seconds for the cross to no longer be seen	60.5	63.2	82.3	65.7

Calculate the mean time for this reaction.

Do **not** include the anomalous result in your calculation.

Give your answer to 3 significant figures.

[3 marks]

Mean time for the reaction (3 significant figures) = _____ s

14

Turn over for the next question