This article has been accepted for inclusion in a future issue of this journal. Content is final as presented, with the exception of pagination.

Tracking Knowledge State Transitions in Cognitive Diagnosis for an Exercise-Exam Learning Model

Xinjie Sun, Qi Liu, *Member, IEEE*, Kai Zhang, *Member, IEEE*, Fei Wang, and Shuanghong Shen

***Abstract*—Cognitive diagnosis (CD) models assess students' knowledge state by analyzing test performance and identifying specific knowledge concepts mastered. However, traditional CD models often overlook dynamic changes in knowledge state during exercise and exam. To address this, we propose *tracking knowledge state transitions in cognitive diagnosis (TKT-CD)*. The TKT-CD model introduces two key modules: the time-driven knowledge state transition (TDKT) module and the cognition-driven knowledge state transition (CDKT) module. TDKT captures temporal transitions in knowledge state during exercise, while CDKT analyzes relationships between knowledge concepts during exercise and exam to enhance reasoning accuracy. Combining neural networks with traditional static CD methods, TKT-CD resolves inconsistencies in knowledge state and provides more accurate representations of student interactions. Empirical studies show that TKT-CD significantly outperforms existing CD methods in predicting student performance, particularly in exercise and exam-based learning modes, offering a more effective tool for personalized education.**

***Index Terms*—Cognitive diagnosis (CD), data mining, exercise-exam learning model, intelligent tutoring systems, neural networks.**

Received 10 December 2024; revised 26 January 2025 and 28 April 2025; accepted 10 June 2025. This work was supported in part by the National Natural Science Foundation of China under Grant 62337001, Grant U23A20319, and Grant 62406303, in part by the Key Technologies R&D Program of Anhui Province under Grant 202423k09020039, in part by the Guizhou Provincial Higher Education Undergraduate Teaching Content and Curriculum System Reform Project under Grant GZJG2024331 and Grant GZJG2024323, in part by the Guizhou Provincial Science and Technology Projects under Grant QKHJC[2024]Youth012 and in part by the Anhui Postdoctoral Scientific Research Program Foundation under Grant 2025A1027. Paper no. TII-24-6631. *(Corresponding author: Qi Liu.)*

Xinjie Sun is with the State Key Laboratory of Cognitive Intelligence, University of Science and Technology of China, Hefei 230026, China, and also with Liupanshui Normal University, Liupanshui 553001, China (e-mail: xinjiesun@mail.ustc.edu.cn).

Qi Liu and Kai Zhang are with the State Key Laboratory of Cognitive Intelligence, University of Science and Technology of China, Hefei 230026, China (e-mail: qiliuql@ustc.edu.cn; kkzhang08@ustc.edu.cn).

Fei Wang is with the School of Computing, National University of Singapore, Singapore 119077 (e-mail: wf314159@mail.ustc.edu.cn).

Shuanghong Shen is with the Institute of Artificial Intelligence, Hefei Comprehensive National Science Center, Hefei 230000, China (e-mail: closer@mail.ustc.edu.cn).

Digital Object Identifier 10.1109/TII.2025.3582981

Nomenclature

Symbol	*Description*
S, E	Set of students and exercises.
K, R	Set of knowledge concepts and responses.
r, $\mathbf{R}$	Response and its embedding.
$\mathbf{x}_s$, $\mathbf{x}_e$	One-hot encoding of learner and exercise.
n, m, k	Number of students, exercises, and knowledge concepts.
L, KT_t, $\hat{h}_{t-1}$	Learners' exercise sequences, knowledge state transitions, and cognitive level.
d_r, d_h, d_e	Dimensions of the learner's response, hidden knowledge state, and exercise.
S_i^θ, $\mathbf{h_e}^{\text{diff}}$, h_e^{disc}	Learner's knowledge proficiency, exercise difficulty, and discrimination.

I. Introduction

COGNITIVE diagnosis (CD) leverages students' historical interaction data to deeply analyze their understanding and mastery of specific knowledge concepts, thereby enhancing learning efficiency and helping students better understand their learning progress. [1], [2]. Fig. 1(a) illustrates a brief process of traditional CD.

Traditional cognitive diagnosis models (CDMs) can be categorized into continuous and discrete models. Continuous models, such as item response theory (IRT), represent students using a single-dimensional ability value [3], while discrete models, such as DINA [4], use binary vectors to represent students. Although these models offer strong interpretability, their predictive accuracy i not high. Improved models, such as MIRT [5] still struggle to capture the complex relationships between students and exercises. Due to the powerful fitting and pattern recognition capabilities of neural networks, they have been widely applied in various fields, such as natural language processing [6] and recommendation systems [7]. Subsequently, Wang et al. [1] proposed the neural cognitive diagnosis model (NeuralCDM) by leveraging neural networks to learn the complex interactions between students and exam factors. Experimental results demonstrated the effectiveness and interpretability of this model. However, there are still many diagnostic factors in exams that require further exploration in this model.

Despite the new perspectives provided by deep learning-based CD methods for solving CD problems, the current evaluation of students' knowledge state still primarily relies on static CD

1941-0050 © 2025 IEEE. All rights reserved, including rights for text and data mining, and training of artificial intelligence and similar technologies. Personal use is permitted, but republication/redistribution requires IEEE permission. See https://www.ieee.org/publications/rights/index.html for more information.

Authorized licensed use limited to: GUILIN UNIVERSITY OF ELECTRONIC TECHNOLOGY. Downloaded on September 11,2025 at 11:07:02 UTC from IEEE Xplore. Restrictions apply.

This article has been accepted for inclusion in a future issue of this journal. Content is final as presented, with the exception of pagination.

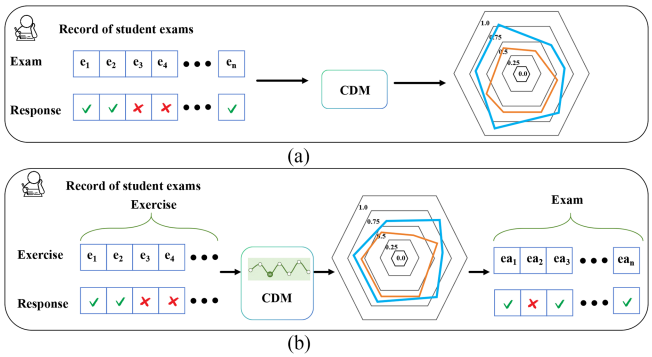

Fig. 1. Toy example demonstrating a simplified process of cognitive diagnosis, "CDM" refers to any CD model.

based on exam or exercise records. However, the exercise-exam learning model is the most common scenario in students' learning processes [8], [9]. When static CD techniques are applied to the entire exercise-exam learning process, they overlook the dynamic growth characteristics of students during the learning process. Fig. 1(b) illustrates the simplified process of CD in the exercise-exam learning model. Specifically, the purpose of students practicing is to continuously improve their knowledge mastery [10], [11], thereby performing better in exams. Therefore, the knowledge state of students during the exercise phase should continuously change as exercise deepens. By using CD techniques to capture these changes in real-time and update students' cognitive states, we can more accurately predict exam performance. This dynamic CD technique not only provides a more comprehensive reflection of students' learning progress, but also offers strong support for personalized teaching.

In order to accurately diagnose students' dynamic knowledge mastery during the exercise phase and effectively apply knowledge state to the exam phase for precise CD, this article addresses three key challenges. First, how to capture the dynamic changes in students' knowledge state during exercise, while ensuring the stability of static knowledge state required for the exam phase. This challenge goes beyond traditional knowledge tracing techniques, requiring the model to balance dynamic adaptation with stable inference. Second, modeling individual cognitive differences in real-time proficiency is crucial for comprehensive assessment. Students exhibit significant personalized cognitive paths during the learning process, which places higher demands on balancing dynamic knowledge transfer with cognitive stability. Finally, integrating students' current cognitive state, historical knowledge accumulation, and interaction data, while maintaining knowledge state consistency during the transition from exercise to exams is a core challenge in CD. To address these challenges, this article introduces a knowledge state transition tracking cognitive diagnosis model (TKT-CD) suited for the exercise-exam learning mode. The model achieves high-precision modeling and inference of cognitive states through the following innovative designs: First, the time-driven knowledge state transition (TDKT) module, which uses time series modeling to dynamically capture the natural evolution of students' knowledge proficiency, adapting flexibly to the dynamic demands of the exercise phase and the static requirements of the exam phase. Second, the cognitive knowledge state (CK) module, which dynamically models personalized knowledge changes, balancing the relationship between dynamic knowledge transfer and cognitive stability, effectively capturing individual cognitive differences. Finally, the cognitive-driven knowledge state transition (CDKT) module integrates the current cognitive state, historical knowledge accumulation, and interaction data to maintain knowledge state stability during the exam phase, ensuring a seamless transition between phases and significantly improving the quality of CD. In summary, our solution addresses the aforementioned challenges, enabling more accurate recognition and diagnosis of students' knowledge state. The main contributions of this study are as follows.

1) We are the first to focus on CD methods based on the exercise-exam learning model in CD tasks.
2) We propose the TKT-CD framework, which tracks knowledge state transitions and applies them to CD, combining dynamic and static elements.
3) Our model achieves state-of-the-art accuracy and AUC on five benchmark datasets, demonstrating superior performance.[1] These results highlight the effectiveness of the TKT-CD model and its potential to advance practical applications of CD.

II. Related Work

Static Cognitive Diagnosis: CD is essential in education, gaming, and healthcare for analyzing test records and understanding latent traits. Early models, such as IRT [3], DINA [4], and MIRT [5] focus on learner-item interactions. Recent deep learning methods, such as NeuralCDM [1] face challenges with knowledge concepts beyond student responses. GCD [2] uses cognitive graphs and attention mechanisms, while SCD [12] enhances diagnostic accuracy for sparse records. Graph-based models generally have higher complexity than NeuralCDM.

Neural architecture search (NAS) is gaining traction in CD. Li et al. [13] introduced ID-CDF to mitigate nonidentifiability and overfitting. Liu et al. [14] developed ICDM, enhancing student ability interpretability. Chen et al. [15] proposed DCD with a variational autoencoder, and Qi et al. [16] introduced ICD with an encoder–decoder architecture. NAS-based models generally have higher complexity than NeuralCDM. *In TKT-CD, we use NeuralCDM for its lower complexity, making it one of the most efficient neural network models.*

To monitor students' knowledge state, several studies integrate CD with knowledge tracing. Zhang et al. [17] proposed Gated-GNN with IRT. Wang et al. [18] introduced DynamicCD, and Ma et al. [19] presented CT-NCM using the neural Hawkes process. *Our model differs from this approach, while they integrate CD into the prediction layer of knowledge tracing, we continuously consider dynamic knowledge state transition and distinguish between exercise and exam scenarios.*

[1]To contribute to the broader research community, we plan to provide the source code at https://github.com/xinjiesun-ustc/TKT-CD

Authorized licensed use limited to: GUILIN UNIVERSITY OF ELECTRONIC TECHNOLOGY. Downloaded on September 11,2025 at 11:07:02 UTC from IEEE Xplore. Restrictions apply.

This article has been accepted for inclusion in a future issue of this journal. Content is final as presented, with the exception of pagination.

Dynamic Cognitive Diagnosis (DCD): DCD, also known as knowledge tracing (KT), aims to track the dynamic changes in students' knowledge state and predict their learning performance [20]. Traditional models often fall short in accurately capturing fine-grained knowledge transitions [21]. In recent years, research has significantly improved prediction performance by optimizing model structures and diagnostic algorithms [18], [22], [23]. For instance, THKT [24] enhances prediction accuracy and model interpretability by hierarchically modeling students' knowledge state. However, these methods typically focus on dynamic predictions during exercise phases, paying insufficient attention to the consistency of knowledge state across different learning stages, such as transitioning from exercise to exams. To address this issue, we propose the TKT-CD model, which models dynamic knowledge transitions during exercise, while maintaining stable knowledge representations in exams, ensuring consistent knowledge state across learning stages.

Exercise-Exam Learning Model: The exercise-exam learning model has been proven to enhance students' learning outcomes and final exam performance [8]. However, its effectiveness can be influenced by factors, such as test characteristics and student traits, with varying impacts from different types of exercise-exam activities [25], [26]. Beyond academics, exercise-exam practices have also shown benefits in driving tests [27]. In legal education, the effects of exercise essays and feedback on law students have been examined [28]. Our TKT-CD model combines the dynamic knowledge state updating method of KT during the exercise phase with the independent CD method during the exam phase, optimizing learning and assessment within the exercise-exam framework, improving diagnostic accuracy, and providing actionable insights into students' learning trajectories.

III. Preliminary

In this section, we present the formal definition of CD within the context of the exercise-exam learning model. In addition, we introduce some basic factors and important embeddings involved in the proposed TKT-CD framework. Nomenclature summarizes the mathematical symbols used in this article.

A. Problem Definition

In the exercise-exam learning model, the set of learners is denoted as S, the set of exercises as E, the set of knowledge concepts as K,and the set of learner response records as R. The set of learners $S = \{s_1, s_2, \ldots, s_n\}$ comprises n different learners. The set of exercises $E = \{e_1, e_2, \ldots, e_m\}$ includes m different items. The set of knowledge concepts $K = \{k_1, k_2, \ldots, k_k\}$ encompasses k different knowledge concepts. The response set $R = \{0, 1\}$ is a set containing two elements used to determine the correctness of a learner's answer, where 1 represents a correct answer and 0 represents an incorrect answer.

In the learner's exercise-exam learning model, the historical behavior of learners is represented by each learner selecting several exercises. The answering record L is expressed as a set of quadruples (s, e, k, r), where $s \in S$ represents the learner, $e \in E$ represents the exercise, $k \in K$ represents the knowledge concept contained in the item, and r indicates whether the learner answered the exercise e correctly. In addition, the Q-matrix of exercises is known (usually annotated by experts), denoted as $Q = Q_{ij}^{m\times k}$. When item e_i involves knowledge concept k_j, $Q_{ij} = 1$; otherwise, $Q_{ij} = 0$. The definition of knowledge development tracking in CD within the exercise-exam learning model is as follows.

Exercise Phase: The stage where students engage in free exercise, during which their knowledge state transition KT_t and cognitive level $\hat{h_{t-1}}$ dynamically change to assess knowledge growth.

Exam Phase: The formal evaluation stage following exercise. Due to the short duration, learners' abilities remain largely unchanged. Thus, their KT_t and $\hat{h_{t-1}}$ are maintained at exercise phase levels to verify the accuracy of the CD.

Cognitive Diagnosis (CD): In the exercise-exam learning model, given a learner's exercise-exam records $L = \{(s_1, e_1, k_1, r_1), (s_1, e_2, k_2, r_2), \ldots, (s_1, e_t, k_t, r_t)\}$ and the Q-matrix, CD proceeds in two stages. The first stage involves diagnosing the learner's knowledge mastery during the exercise process, which is dynamic and changes with ongoing exercise. The second stage analyzes exam performance to assess the validity of students' knowledge state diagnosis during the exercise phase.

B. Basic Factors

Before engaging in CD interactions, it is essential to introduce some basic factors that aid in understanding the details. First, the learner's knowledge proficiency vector S_i^θ has a length equal to the number of knowledge concepts. This vector is computed using the learner ID's one-hot encoding $\mathbf{x}_s$ and a trainable knowledge proficiency matrix $\mathbf{S}$

$$S_i^\theta = \sigma(\mathbf{x}_s \times S) \tag{1}$$

where $S_i^\theta \in (0,1)^{1\times k}$, $\mathbf{x}_s \in \{0,1\}^{1\times n}$, $S \in \mathbb{R}^{n\times k}$, and $\sigma(\cdot)$ denotes the sigmoid function.

Regarding the exercises, the basic factors we need to consider include the knowledge concept difficulty $\mathbf{h_e}^{\text{diff}}$ and the exercise discrimination h_e^{disc}. Their calculation methods are as follows:

$$\begin{aligned} \mathbf{h_e}^{\text{diff}} &= \sigma(\mathbf{x}_e \times \mathbf{D}) \\ h_e{}^{\text{disc}} &= \sigma(\mathbf{x}_e \times \mathbf{E}) \end{aligned} \tag{2}$$

where $\mathbf{x}_e$ is the exercise ID's one-hot encoding, $\mathbf{h_e}^{\text{diff}} \in (0,1)^{1\times k}$, $h_e^{\text{disc}} \in (0,1)$, $\mathbf{D} \in \mathbb{R}^{m\times k}$, and $\mathbf{E} \in \mathbb{R}^{m\times 1}$, with $\mathbf{D}$ and $\mathbf{E}$ being trainable matrices.

C. Embeddings

Before delving into the TKT-CD model's structure, we will briefly introduce its basic embeddings to aid in understanding its internal workings.

In the TKT-CD model, the core elements include students, exercises, knowledge concepts (KCs), and student responses. Specifically, we use the embedding matrix $\mathbf{S} \in \mathbb{R}^{n\times d_s}$ to represent the students' knowledge proficiency, where d_s is the embedding dimension size, and n is the number of students. The embedding matrix $\mathbf{E} \in \mathbb{R}^{m\times d_e}$ represents all the exercises answered by students, where d_e is the embedding dimension size, and m is the number of different exercises. In addition,

Authorized licensed use limited to: GUILIN UNIVERSITY OF ELECTRONIC TECHNOLOGY. Downloaded on September 11,2025 at 11:07:02 UTC from IEEE Xplore. Restrictions apply.

This article has been accepted for inclusion in a future issue of this journal. Content is final as presented, with the exception of pagination.

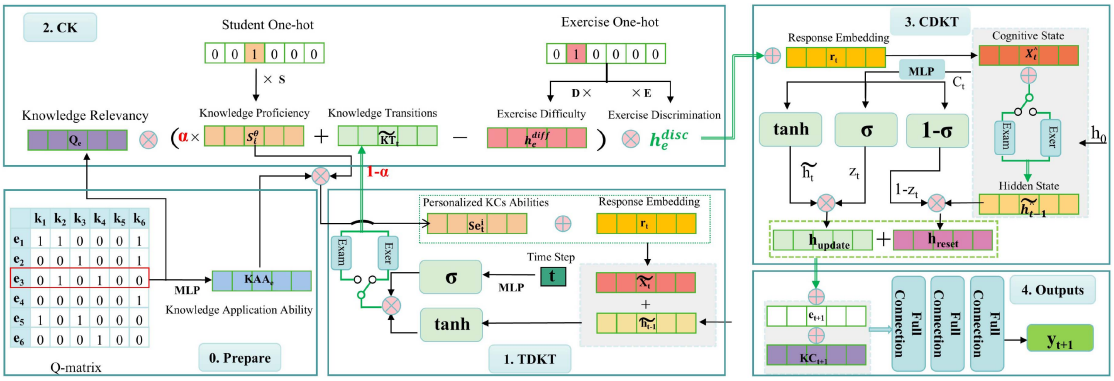

Fig. 2. This is the TKT-CD model diagram, where TDKT stands for time-driven knowledge state transitions, CK represents cognitive knowledge State, and CDKT denotes cognitively-driven knowledge state transitions. 'Exer' refers to the exercise phase, and 'Exam' refers to the examination phase.

Algorithm 1: The TKT-CD Model.

Input: Learners S, Exercises E, Knowledge Concepts K, Response Records L, Q-matrix Q.

Output: Updated Knowledge State h_t, Prediction y_{t+1}.

1: Initialize knowledge abilities and construct knowledge relevance using Q-matrix
2: Compute student's knowledge proficiency S_i^θ by (1)
3: Compute exercise difficulty $\mathbf{h_e}^{\text{diff}}$ and discrimination h_e^{disc} by (2)
4: Calculate knowledge concept relevance vector using (3) and (4)
5: Compute time-driven knowledge state transitions by (5) and (6)
6: Compute Cognitive Knowledge State CK_t by (7)
7: Update cognitive state h_t using CDKT gating by (8) and (9)
8: Predict next question performance y_{t+1} by (10)
9: Return updated knowledge state h_t and prediction y_{t+1}

we use the embedding matrix $\mathbf{KC} \in \mathbb{R}^{k \times d_k}$ to represent the knowledge concepts associated with all exercises, where d_k is the embedding dimension size, and k is the number of different knowledge concepts. The student responses are represented by the embedding matrix $\mathbf{R} \in \mathbb{R}^{2 \times d_r}$, where d_r is the embedding dimension size, and 2 indicates the correctness of the response, with 1 representing a correct answer and 0 representing an incorrect answer.

IV. The TKT-CD Model

This section describes the TKT-CD model, consisting of five parts as shown in Fig. 2 and Algorithm 1. More details on these modules will follow.

A. Prepare

An important task in the cognitive level research paradigm is the Q-matrix [1], which represents the relationship between exercises and knowledge concepts. Each exercise's associated knowledge concepts are typically represented by the Q-matrix. For the knowledge concept relevance vector of each exercise e, we directly use the corresponding row vector in the Q-matrix, $\mathbf{Q}_e$, as follows:

$$\mathbf{Q}_e = \mathbf{x}_e \times Q \tag{3}$$

where $\mathbf{x}_e \in \{0,1\}^{1 \times m}$ is the one-hot encoded vector of exercise e's ID, and $\mathbf{Q}_e \in \{0,1\}^{1 \times k}$ represents the knowledge concept relevance vector of the exercise. Subsequently, based on the Q-matrix, we calculate the performance of knowledge concept relevance in application as follows:

$$\mathbf{KAA_e} = \mathbf{Q}_e \cdot W_e + \mathbf{b_e} \tag{4}$$

where $W_e \in \mathbb{R}^{d_k \times d_k}$ is a learnable weight parameter, and $b_e \in \mathbb{R}^{d_k}$ is the bias term.

B. Time-Driven Knowledge State Transitions (TDKT)

As individuals progress, they naturally expand their knowledge base through continuous learning and the accumulation of experiences. This natural growth in knowledge is reflected not only in the acquisition of new information, but also in the deepening and extension of existing knowledge, enriching, and complicating the individual's cognitive structure [29]. During the exercise phase, students continuously engage in various exercises, and even if some responses are incorrect, this process still impacts their cognitive abilities [24]. Building on this idea, we propose a time-varying knowledge state transition mechanism for the exercise phase. This mechanism first performs elementwise multiplication of $\mathbf{KAA_e}$ with the student's specific knowledge proficiency S_i^θ, and then concatenates the result with the student's response to obtain the personalized knowledge application ability X_t. The specific calculation process is as follows:

$$Se_t^\theta = \mathbf{KAA_e} \circ S_i^\theta$$
$$X_t = Se_t^\theta \oplus r_t \tag{5}$$

where $r_t \in \mathbb{R}^{2 \times d_r}$ is the trainable student response matrix.

Subsequently, we design a time-driven gating mechanism inspired by the Ebbinghaus forgetting curve [30], which

Authorized licensed use limited to: GUILIN UNIVERSITY OF ELECTRONIC TECHNOLOGY. Downloaded on September 11,2025 at 11:07:02 UTC from IEEE Xplore. Restrictions apply.

This article has been accepted for inclusion in a future issue of this journal. Content is final as presented, with the exception of pagination.

dynamically adjusts the influence of historical cognitive states based on elapsed time, thereby simulating the natural decay and reinforcement of memory in the learning process. The calculation formula is as follows:

$$\begin{aligned}\widetilde{X_t} &= W_{\mathrm{x}} X_t + b_{\mathrm{x}} \\ \widetilde{h_{t-1}} &= W_{\mathrm{h}} h_{t-1} + b_{\mathrm{h}} \\ G_t &= \sigma(W_{\text{time}} t + b_{\text{time}}) \\ KT_t &= \tanh(\widetilde{X_t} + \widetilde{h_{t-1}}) \cdot G_t \end{aligned} \tag{6}$$

where X_t and $\widetilde{h_{t-1}}$ represent the linear transformations of the current knowledge application ability and the previous hidden state, respectively, using the trainable parameters $W_x \in \mathbb{R}^{(k+d_r)\times k}$, $b_x \in \mathbb{R}^k$, and $W_h \in \mathbb{R}^{d_h \times k}$, $b_h \in \mathbb{R}^k$. The time gate factor G_t is computed using the Sigmoid function based on the current time t, with the trainable parameters $W_{\text{time}} \in \mathbb{R}^{1\times k}$ and $b_{\text{time}} \in \mathbb{R}^k$. Finally, the knowledge state KT_t at time t is obtained by adding $\widetilde{X_t}$ and $\widetilde{h_{t-1}}$, applying the $\tanh$ activation function, and elementwise multiplying the result by G_t, which adjusts the contribution of the time dependency to the current knowledge state.

C. Cognitive Knowledge State (CK)

After obtaining the personalized knowledge proficiency KT_t that dynamically changes over time, and inspired by [1], we enhance the first layer of the interaction function by incorporating KT_t. This allows us to account for the dynamic changes in knowledge proficiency during the exercise phase. However, it is important to note that during the exam phase (i.e., the test set), in order to validate the CD results obtained from the exercise phase, KT_t no longer changes over time, but instead maintains the average state value of the learner across all test items. This design helps to avoid ambiguity in the boundary of knowledge states. The calculation method of the CK state is as follows:

$$\begin{aligned}\widetilde{KT_t} &= \begin{cases} KT_t & \text{if } t < T \\ \frac{1}{T-1}\sum_{i=1}^{T-1} KT_i & \text{if } t = T \end{cases} \\ CK_t &= \mathbf{Q}_e \circ (\alpha \times Se_t^{\theta} + (1-\alpha) \times \widetilde{KT_t} - \mathbf{h_e}^{\text{diff}}) \times h_e{}^{\text{disc}} \end{aligned} \tag{7}$$

where T is the time step segmentation point distinguishing the exercise phase from the exam phase, and α is a trainable parameter.

D. Cognitively-Driven Knowledge State Transitions (CDKT)

During the exercise phase, learners' cognitive states evolve continuously as they exercise [31]. To enhance the cognitive process during exercise, particularly in understanding the relationships between exercises based on the learners' cognitive state CK_t, we have designed a cognitively-driven knowledge state transition (CDKT) gating mechanism. This mechanism updates the cognitive state by first concatenating CK_t with the learner's response, then integrating it with the hidden state of the previous exercise's knowledge state $\hat{h}_{t-1}$ from the exercise phase. Importantly, during the exam phase (i.e., when the test set begins), the hidden state $\hat{h}_{t-1}$ is set to the average cognitive hidden state of each learner from all time steps in the exercise phase. The calculation process is as follows:

$$\begin{aligned}\hat{X_t} &= CK_t \oplus r_t \\ \widetilde{\hat{h_{t-1}}} &= \begin{cases} \hat{h_{t-1}} & \text{if } t < T \\ \frac{1}{T-1}\sum_{i=1}^{T-1} \hat{h_i} & \text{if } t = T. \end{cases} \end{aligned} \tag{8}$$

Subsequently, we employ the CDKT gating mechanism to update the cognitive state, inspired by the rehearsal effect in cognitive psychology [32], which allows the model to reinforce or revise prior knowledge based on current learning cues. The specific calculation process is as follows:

$$\begin{aligned} C_t &= \hat{X_t} \oplus \widetilde{\hat{h_{t-1}}} \\ z_t &= \sigma(W_z \cdot C_t + b_z) \\ \widetilde{h_t} &= \tanh(W_h \cdot C_t + b_h) \\ h_t &= (1 - z_t) \times \hat{h_{t-1}} + z_t \times \widetilde{h_t} \end{aligned} \tag{9}$$

where $W_z, W_h \in \mathbb{R}^{(k+d_r+d_h)\times k}$ are trainable weight matrices, and $b_z, b_h \in \mathbb{R}^k$ are bias terms.

E. Output Layer

Through the CDKT model, we have obtained the learner's cognitive state h_t at the current time step t. To better represent the learner's performance in using the learned knowledge at the next time step $t+1$, we integrate the exercise e_{t+1} and the related knowledge concepts kc_{t+1} of time step $t+1$ into the current cognitive state for output prediction. The formula is as follows:

$$\begin{aligned} y_t &= e_{t+1} \oplus kc_{t+1} \oplus h_t \\ f_1 &= \sigma(W_1 \cdot y_t + b_1) \\ f_2 &= \sigma(W_2 \cdot f_1 + b_2) \\ y_{t+1} &= \sigma(W_3 \cdot f_2 + b_3) \end{aligned} \tag{10}$$

where $W_1 \in \mathbb{R}^{(d_e+k+k)\times d}$, $W_2 \in \mathbb{R}^{d\times k}$, and $W_3 \in \mathbb{R}^{k\times 1}$ are learnable weight parameters, and $b_1 \in \mathbb{R}^d$, $b_2 \in \mathbb{R}^k$, and $b_3 \in \mathbb{R}^1$ are bias terms. $\sigma(\cdot)$ is the sigmoid nonlinear activation function.

F. Objective Function

To optimize all parameters in the TKT-CD framework, we use the cross-entropy loss function for each record in the observed response log set $L = \{(s, e, k, r_{se}) \mid s \in S, e \in E, k \in K, r_{se} \in \{0, 1\}\}$ over time. This loss function measures the difference between the predicted value y_{sek}^t and the actual correctness of the learner's response r_{se}^t. The specific form of the loss function is as follows:

$$\begin{aligned}\mathcal{L}(\theta) = -\sum_{(s,e,k,r_{se}^t)\in L} &\big(r_{sek}^t \log(y_{sek}^t) \\ &+ (1 - r_{sek}^t)\log(1 - y_{sek}^t)\big) + \lambda_\theta \|\theta\|^2 \end{aligned} \tag{11}$$

where θ represents all parameters in the TKT-CD framework, and λ_θ is the hyperparameter for the regularization term. We

Authorized licensed use limited to: GUILIN UNIVERSITY OF ELECTRONIC TECHNOLOGY. Downloaded on September 11,2025 at 11:07:02 UTC from IEEE Xplore. Restrictions apply.

This article has been accepted for inclusion in a future issue of this journal. Content is final as presented, with the exception of pagination.

TABLE I
PERFORMANCE COMPARISON (%) OF DIFFERENT METHODS ON VARIOUS DATASETS, INCLUDING ASSIST2009, EDNET-KT1, AIZU_PYTHON, PISA2015_SCIENCE, AND LCHR

Methods \ Datasets	ASSIST2009		EdNet-KT1		AIZU_Python		PISA2015_Science		LCHR		Computational Complexity
	ACC	AUC	ACC	AUC	ACC	AUC	ACC	AUC	ACC	AUC	
IRT	65.49	68.24	64.29	65.75	52.15	56.21	53.46	54.11	68.74	67.42	$O(L \cdot I)$
MIRT	69.55	71.21	63.84	64.97	58.47	60.75	55.41	54.89	68.98	68.57	$O(L \cdot d \cdot I)$
DINA	64.11	67.29	57.17	60.21	52.47	53.56	54.77	56.94	71.29	72.44	$O(L \cdot I)$
DKT*	68.31	72.18	64.27	65.96	67.13	59.44	53.47	57.16	68.67	68.34	$O(L \cdot d^2)$
GKT	72.59	74.36	68.39	73.59	70.19	70.56	69.67	68.37	71.45	73.16	$O(H \cdot (E+L) \cdot d + L \cdot d^2)$
NCDM*	72.58	75.46	70.56	74.28	70.47	70.15	75.49	76.24	73.22	75.58	$O(L \cdot d^2)$
GCDM	72.59	75.37	70.49	73.58	68.62	70.76	74.26	75.34	72.33	72.22	$O(H \cdot (E+L) \cdot d^2)$
RCD	70.25	71.35	71.09	70.36	67.29	65.44	72.84	76.87	73.48	73.25	$O(L^2 \cdot d^2)$
SCD	73.08	75.29	71.08	72.63	70.26	70.58	70.10	71.48	72.11	73.93	$O(L^2 \cdot d^2)$
GPT-4.0	69.27	68.45	67.29	68.49	70.22	72.48	68.46	70.29	70.92	71.66	$O(L^2 \cdot d + L \cdot d^2)$
DCD	72.19	73.11	72.33	73.34	70.46	71.74	68.39	70.22	71.01	72.28	$O(H \cdot (E+L) \cdot d^2)$
ICDM	70.34	74.38	70.57	72.44	69.77	71.07	69.32	70.59	71.15	74.86	$O(H \cdot (E+L \cdot d^2))$
TKT-CD*	**74.17**†$^{\uparrow 1.09}$	**76.56**†$^{\uparrow 1.10}$	**71.95**†$^{\uparrow 0.86}$	**75.26**†$^{\uparrow 0.98}$	**73.18**†$^{\uparrow 2.71}$	**75.55**†$^{\uparrow 3.07}$	**76.13**†$^{\uparrow 0.64}$	**77.55**†$^{\uparrow 0.68}$	**75.62**†$^{\uparrow 1.14}$	**78.44**†$^{\uparrow 2.86}$	$O(L \cdot d^2)$
- CDKT	73.25	75.68	71.11	74.39	70.94	74.29	73.28	74.14	74.29	75.55	-
- TDKT	73.97	75.73	71.29	75.16	72.87	74.26	75.59	76.83	73.72	76.78	-

Best results are in bold, and second best are underlined. "-CDKT" excludes the Cognitively-Driven Knowledge State Transitions module, while "-TDKT" excludes the Time-Driven Knowledge State Transition module. Marker "*" indicates the model with the optimal computational complexity among neural network-based models and Marker "†" denotes a p-value less than 0.05 in t-test. In computational complexity, L is the sequence length, d is the feature dimension, E is the number of edges in the graph, I is the number of iterations, and H is the number of layers in the graph convolutional network.

use the Adam optimization algorithm to minimize this loss function. Further details of other settings will be elaborated in the experimental section.

V. EXPERIMENTS

In this section, we first introduce the real-world datasets used in the experiments, then detail the training process and baseline models. Subsequently, we compare the results of the baseline models with the proposed TKT-CD model in predicting learners' future performance. In addition, to better demonstrate the TKT-CD model, we address the following research questions.

1) *RQ1:* Does the proposed TKT-CD model perform well in predicting learners' performance?
2) *RQ2:* How do different exercise and exam schemes affect learners' knowledge mastery?
3) *RQ3:* Is our TKT-CD model capable of effectively tracking the transitions in knowledge state during the learning process to facilitate more accurate CD?
4) *RQ4:* Is there a match between learners' knowledge mastery and their exam results?
5) *RQ5:* How do knowledge state transitions in TKT-CD affect CD results?

To verify the effectiveness of the proposed model, we conducted tests across various subjects and stages using five datasets: 1) ASSIST2009,[2] 2) EdNet-KT1,[3] 3) AIZU_Python,[4] 4) PISA2015_Science,[5] and 5) LCHR.[6] Dataset statistics are shown in Table II. We set sequence lengths for exercise sessions to 50, 100, 200, 30, and 30, respectively, removing records with fewer than 15 entries. Longer sequences were split into multiple virtual learners, while shorter ones were padded with zeros. In the AIZU_Python and LCHR dataset, only the first attempt of each learner on the same problem was retained. The first 80% of each data sequence was used for the exercise phase, while the last 20% was reserved for the exam phase.

TABLE II
STATISTICS OF ALL DATASETS

Statistics \ Datasets	ASSIST2009	EdNet-KT1	AIZU_Python	PISA2015_Science	LCHR
# of records	17,751	13,169	81,492	14,454,985	635,842
# of participants	4,163	784,309	369	504,052	18,984
# of KCs	123	188	1,493	273	628
Average of records	83.32	121.5	220.85	28.67	33.49
Subject	Mathematics	English	Programming	Science	law
Learning Stages	Middle school	/	University	Junior middle school	Professional career

1) ASSIST2009 [33] features online learning data from American high school students, including response records and personal characteristics, useful for analyzing learning patterns and predicting outcomes.
2) EdNet-KT1 [34] is a large dataset collected from Santa since 2017, containing extensive data from multiple learners, including educational text, and is one of the largest publicly available educational datasets.
3) AIZU_Python [35] is sourced from AIZU.org, a popular online programming platform, recording extensive programming exercise data from learners.
4) PISA2015_Science [36] is a global assessment, dubbed the "Olympics of testing," involving nearly 100 countries. It evaluates 15-year-olds' skills, with this study focusing on CD in science.
5) LCHR [37] contains real-world data on lawyers' case handling activities, including case records, participants, and key legal concepts. It offers a unique perspective for evaluating CDM in professional settings beyond education.

A. Experimental Setup

During the experiment, we removed entries missing key response attributes and reorganized the datasets. For the AIZU_Python dataset, we used the exercises as knowledge concepts. At the beginning of the training, all model parameters were randomly initialized. The experiments were conducted on

[2][Online]. Available: https://sites.google.com/site/assistmentsdata/home/2009-2010-assistment-data
[3][Online]. Available: https://github.com/bigdata-ustc/EduData?tab=readme-ov-file
[4][Online]. Available: https://dax-cdn.cdn.appdomain.cloud/dax-project-codenet/1.0.0/readme.html
[5][Online]. Available: https://www.oecd.org/en/data/datasets/pisa-2015-database.html
[6][Online]. Available: https://www.51djl.com

Authorized licensed use limited to: GUILIN UNIVERSITY OF ELECTRONIC TECHNOLOGY. Downloaded on September 11,2025 at 11:07:02 UTC from IEEE Xplore. Restrictions apply.

This article has been accepted for inclusion in a future issue of this journal. Content is final as presented, with the exception of pagination.

a 64-bit Ubuntu 20.04.5 LTS server equipped with a 2.30-GHz Intel Xeon Gold 5218 CPU and a 32-GB Tesla-V100 GPU, using the PyTorch framework for computation. To evaluate the performance of the TKT-CD model, we compared it with various established baseline models. By meticulously reproducing and finely tuning these models, we ensure they operate at their optimal state, thus maintaining a fair comparison standard. We used two key performance indicators, area under the curve (AUC) and accuracy (ACC), to comprehensively assess the model's effectiveness.

1) *IRT [3]* evaluates learners' mastery of knowledge concepts by analyzing their test performance to estimate ability and item difficulty.
2) *MIRT [5]* extends IRT to assess multiple latent abilities by analyzing test responses to estimate abilities and item parameters simultaneously.
3) *DINA [4]* assumes each question corresponds to multiple knowledge concepts and determines learners' mastery through their responses, using a binary mastery state (mastered or not mastered).
4) *DKT [20]* is a pioneering dynamic CDM using deep learning with RNN or LSTM units to assess students' understanding across subjects.
5) *GKT [22]* integrates graph neural networks into DCD by modeling knowledge as graphs and framing the task as a node-level classification problem over time.
6) *NCDM [1]* uses neural networks to learn the complex interactions between learners and exercises, utilizing multilayer neural networks to achieve accurate and interpretable CD, replacing manually designed prediction functions.
7) *GCDM [2]* uses a heterogeneous cognitive graph to model interactions among learners, skills, and problems, employing a performance propagator and attention-based aggregator to assess skill mastery.
8) *RCD [38]* is a framework that models relationships among students, exercises, and concepts to improve diagnosis accuracy and representation learning.
9) *SCD* [12] framework uses self-supervised learning and graph confusion techniques to assist graphical CD, thereby improving the diagnostic accuracy for learners with sparse interaction records.
10) *GPT-4.0* [39] analyzes learners' responses and learning behaviors to identify learners' knowledge mastery levels and potential learning obstacles.
11) *DCD* [15] leverages student responses and limited labels to disentangle concept factors, aligning them for effective CD.
12) *ICDM* [14] introduces a student-centered graph to efficiently infer new students' mastery levels inductively, avoiding retraining, while maintaining competitive performance.

B. Performance Prediction (RQ1)

The TKT-CD model aims to create a framework reflecting learners' knowledge mastery by analyzing historical exercise and exam records. Our goal is not only to predict exam scores, but also to accurately assess knowledge mastery for improved future performance predictions. We compared the TKT-CD model with existing baseline models to validate its effectiveness, focusing on the potential advantages in personalized teaching support. As shown in Table I, the TKT-CD model significantly outperforms all baseline methods across all evaluation metrics, highlighting the importance of modeling dynamic cognitive changes. Notably, it also achieves substantial performance gains on the LCHR dataset, which features a less standardized learning structure, demonstrating the model's strong adaptability to unstructured or domain-specific educational environments. It performs well across various subjects and stages, with the most substantial improvement in the AIZU_Python dataset, benefiting from longer exercise records.

In the PISA2005_Science dataset, the model shows the least improvement due to limited data. While GPT-4.0 primarily serves natural language processing, it effectively evaluates knowledge state in the AIZU_Python dataset but is less effective in others lacking text information.

It is worth noting that our TKT-CD model has the optimal computational complexity among all models, comparable to NCDM. It should be emphasized that our analysis mainly focuses on the computational complexity at the architectural level. Although the architecture indeed constitutes the major part of the computational burden, the overall computational complexity of the model is not solely determined by its primary architecture.

Importantly, the CDKT module, which considers relationships between exercises, significantly enhances model performance. These findings provide valuable insights for future research in CD within exercise and exam learning patterns.

C. Effect of Exercise and Exam Distribution on Learner's Knowledge Status Assessment (RQ2)

The different distributions of exercises and exams can affect learners' grasp of knowledge, and an appropriate frequency of exercise helps consolidate the knowledge base [40]. To verify the model's effectiveness under varying frequencies of exercises and exams, we conducted f exams and analyzed different proportions of exercise and exam questions. The calculation formula is

$$N_i(k) = \frac{N \times (r + k \times (1 - 2r))}{f} \tag{12}$$

where $N_i(k)$ represents the number of a specific type of question in the ith exam, N is the total number of questions, r is the proportion of exercise questions, f is the number of exams, i is the ith exam (where i ranges from 1 to f), and k is the question type parameter (with $k = 0$ representing exercise questions and $k = 1$ representing exam questions).

The experimental results are shown in Fig. 3. As the number of exams increased, the number of exercise questions decreased, leading to inaccurate assessments of knowledge mastery by the model, which underscores the importance of appropriate exercise. In the AIZU_Python dataset, moderately increasing the proportion of exams (no more than 3 times) did not significantly affect model performance, indicating that in long-sequence learning, as long as the number of exercise questions is appropriate, the model can effectively depict learners'

Authorized licensed use limited to: GUILIN UNIVERSITY OF ELECTRONIC TECHNOLOGY. Downloaded on September 11,2025 at 11:07:02 UTC from IEEE Xplore. Restrictions apply.

This article has been accepted for inclusion in a future issue of this journal. Content is final as presented, with the exception of pagination.

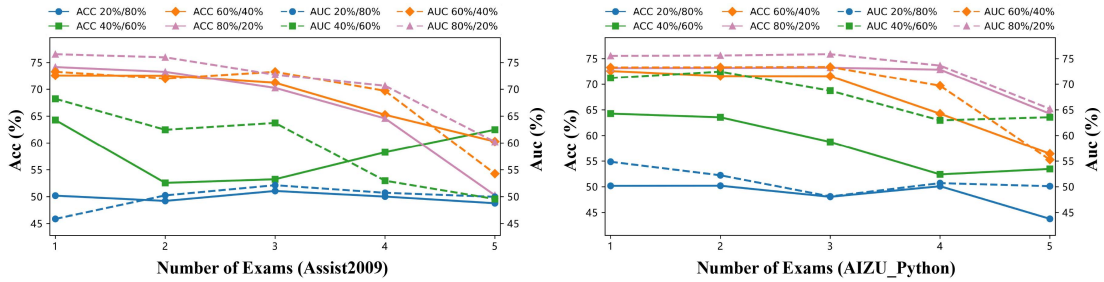

Fig. 3. In the Assist2009 and AIZU_Python datasets, we calculated the ACC and AUC for different exam frequencies (from 1 to 5 times) and varying ratios of exercise questions to exam questions. The percentage before the slash indicates the proportion of exercise questions, while the percentage after the slash represents the proportion of exam questions.

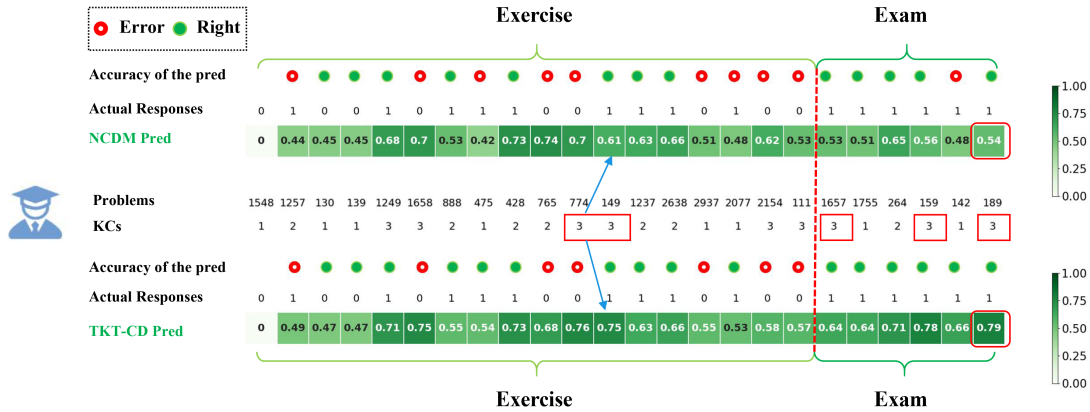

Fig. 4. Learning progress and knowledge state of scholars on the EdNet-KT1 dataset are monitored and visualized through NCDM and TKT-CD. "Exercise" represents students' knowledge performance during the exercise phase, while "Exam" reflects their performance during the exam phase.

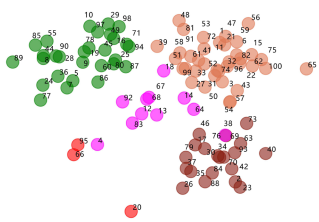

Grade	Student
★★★★★	/
★★★★☆	94, 60, 44, 9, 45, 28, 5, 25, 86, 36, 77, 85, 29, 19, 49, 55, 98, 78, 89, 7, 90, 71, 97, 8, 27, 50, 62, 58, 31, 39, 1, 41, 100
★★★☆☆	11, 22, 15, 33, 32, 54, 51, 75, 61, 53, 47, 91, 52, 21, 65, 48, 82, 6, 24, 87, 16, 80, 10, 18, 20
★★☆☆☆	30, 79, 40, 73, 63, 34, 37, 42, 35, 88, 69, 84, 23, 76, 26, 46, 2, 93, 17, 70, 99, 57, 74, 72, 59, 81, 43, 56, 3, 96, 38, 92, 64
★☆☆☆☆	67, 14, 83, 68, 12, 4, 13, 95, 66

Fig. 5. Comparison of t-SNE visualization of latent feature vectors of knowledge mastery of 100 randomly selected learners in AIZU_Python with manual representation of exam performance, where "Grade" is divided into five levels: Excellent, good, average, pass, and fail.

knowledge profiles. This aligns with human cognitive processes, emphasizing that avoiding blind "drill and kill" tactics is crucial for enhancing students' abilities, while also highlighting the model's interpretability.

D. Effectiveness of Tracking Transitions in Knowledge State (RQ3)

In both NCDM and TKT-CD, we assess learners' knowledge state by monitoring their learning progress. This progress not only reflects their current level of knowledge, but also indicates whether knowledge state transitions have met expected goals, providing effective guidance for both learning and teaching. Fig. 4 illustrates the advantages of TKT-CD over NCDM in capturing meaningful knowledge state transitions.

First, both models provide positive feedback on learners' knowledge state, even when their initial responses are mostly incorrect. Second, NCDM is more sensitive to learners' performance, while TKT-CD exhibits a more stable response. For example, when learners attempt knowledge concept 3 consecutively, NCDM reduces their mastery from 0.70 to 0.61, whereas TKT-CD only lowers the score from 0.76 to 0.75, reflecting a minimal change that aligns better with human cognition.

During the exam phase, TKT-CD also outperforms NCDM. When observing knowledge concept 3, NCDM maintains relatively consistent predictions, while TKT-CD continues to adjust its predictions after learners repeatedly answer correctly. These results not only demonstrate the enhanced predictive accuracy and interpretability of TKT-CD in capturing dynamic knowledge state transitions, but also highlight its strong generalization capability in aligning knowledge representations between the exercise and exam phases, thereby mitigating representation drift.

E. Matching Knowledge Proficiency With Exam Results (RQ4)

We compared the t-SNE visualization of learners' knowledge proficiency during the exercise stage with manual annotation of exam performance, as shown in Fig. 5. The analysis results show

Authorized licensed use limited to: GUILIN UNIVERSITY OF ELECTRONIC TECHNOLOGY. Downloaded on September 11,2025 at 11:07:02 UTC from IEEE Xplore. Restrictions apply.

This article has been accepted for inclusion in a future issue of this journal. Content is final as presented, with the exception of pagination.

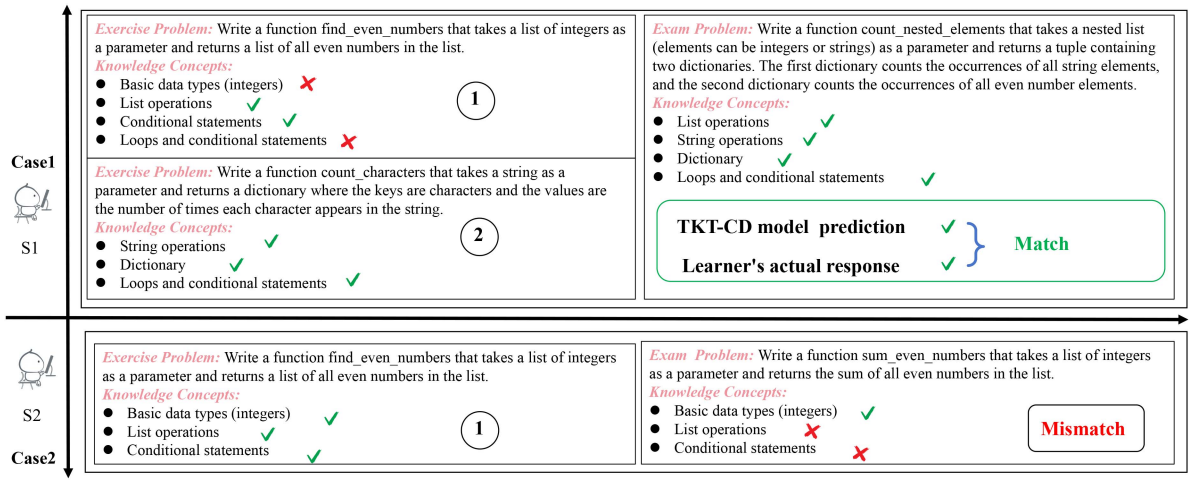

Fig. 6. From the AIZU_Python dataset, we extracted two students for a case study. The numbers in the chart indicate the order of the students' responses, with 'Exercise' representing the exercise phase and 'Exam' representing the exam phase.

that the clusters of learners' knowledge proficiency learned by the model are basically consistent with the manual annotation in most cases. However, we also found some exceptions. For example, learners 18 and 38 should belong to the same category, but manual annotation classified them into different categories. Similarly, learners 66 and 95 were also classified into categories inconsistent with the model learning results. This does not entirely mean that the model classification is wrong, because there may sometimes lack strong relevance between exercise questions and exam questions, and the classification based on exam results does not always clearly reflect the results of learners in the exercise stage [28]. This experiment validates the effectiveness and interpretability of TKT-CD from the perspective of expert annotation comparison and analysis.

F. Visualizing Learner Exam Performance (RQ5)

In this study, we explored the accuracy of diagnosing learners' knowledge mastery by TKT, using the performance of two learners in the AIZU_Python dataset as examples. As shown in Fig. 6, the TKT-CD model introduces knowledge state transitions in the exercise-exam learning pattern, showing a significant advantage in predicting learners' exam performance.

Taking learner S1 as an example, during the exercise stage, the learner performed poorly on the two knowledge concepts in exercise 1, but performed well on the three knowledge concepts in exercise 2, and the knowledge concepts in exercise 2 just covered the poor performance knowledge concepts in exercise 1. Because the TKT-CD model considers knowledge state transitions in the cognitive process, subsequent exercises make up for the previous deficiencies. Therefore, in the exam stage, the knowledge concepts covered in the questions are consistent with the knowledge concepts involved in the previous exercises. The final model prediction matches the student's actual answers perfectly, demonstrating the high interpretability and reliability of the model.

However, the cognition of students is affected by situational factors (such as environment, space, psychological state, exercise difficulty, etc.), and the model cannot perform well in all cases. For example, although learner S2 mastered the same knowledge concepts in exercise as in the exam, he did not fully answer correctly in the exam. This prompts us to pay more attention to the situational factors faced by learners in future research.

VI. Conclusion

This article proposes an innovative CDM, combining the time-driven and cognitive-driven knowledge state transition modules, to enhance the accuracy of assessing student knowledge status. By introducing the TDKT module to capture the changes in knowledge status during the exercise process, and combining neural network technology to solve the problem of nonuniformness of knowledge status. The CDKT module further considers the relationship between knowledge concepts in the exercise and exam stages, significantly improving the accuracy of inference. Experimental results show that the model performs excellently in knowledge state inference and personalized teaching support, improves students' learning efficiency and exam scores, and provides important references for optimizing CD methods under the exercise and exam learning pattern. However, we also recognize that the learning process of students is a complex educational psychology problem, and it is impossible to fully solve the CD problem under the exercise and exam pattern just by capturing the dynamics of students' knowledge status in the exercise stage. In addition, future work will further explore the reliability and optimization of Q-matrix information, which is often imperfect in real-world scenarios.

References

[1] F. Wang et al., "Neural cognitive diagnosis for intelligent education systems," in *Proc. AAAI Conf. Artif. Intell.*, 2020, pp. 6153–6161.
[2] Y. Su et al., "Graph-based cognitive diagnosis for intelligent tutoring systems," *Knowl.-Based Syst.*, vol. 253, 2022, Art. no. 109547.
[3] M. L. Thomas, "Advances in applications of item response theory to clinical assessment," *Psychol. Assessment*, vol. 31, no. 12, 2019, Art. no. 1442.
[4] J. D. La Torre, "Dina model and parameter estimation: A didactic," *J. Educ. Behav. Statist.*, vol. 34, no. 1, pp. 115–130, 2009.

Authorized licensed use limited to: GUILIN UNIVERSITY OF ELECTRONIC TECHNOLOGY. Downloaded on September 11,2025 at 11:07:02 UTC from IEEE Xplore. Restrictions apply.

This article has been accepted for inclusion in a future issue of this journal. Content is final as presented, with the exception of pagination.

[5] T. A. Ackerman, "Multidimensional item response theory models," *Wiley StatsRef: Statist. Reference Online*, pp. 115–130, 2014, doi: 10.1002/9781118445112.stat06401.

[6] A. Pirnat, B. Bertalanic, G. Cerar, M. Mohorcic, and C. Fortuna, "Towards sustainable deep learning for multi-label classification on nilm," *CoRR*, 2023.

[7] N. Alharbe, M. A. Rakrouki, and A. Aljohani, "A collaborative filtering recommendation algorithm based on embedding representation," *Expert Syst. Appl.*, vol. 215, 2023, Art. no. 119380.

[8] O. O. Adesope, D. A. Trevisan, and N. Sundararajan, "Rethinking the use of tests: A meta-analysis of practice testing," *Rev. Educ. Res.*, vol. 87, no. 3, pp. 659–701, 2017.

[9] T. J. Van Hoof, C. M. Leary, V. Banfi, and E. C. Polifroni, "A scoping review of retrieval practice (test-enhanced learning) in nursing education," *Nurs. Educ. Perspectives*, vol. 44, no. 6, pp. 341–346, 2023.

[10] J. J. Cheung, J. Koh, C. Brett, D. J. Bägli, B. Kapralos, and A. Dubrowski, "Preparation with web-based observational practice improves efficiency of simulation-based mastery learning," *Simul. Healthcare*, vol. 11, no. 5, pp. 316–322, 2016.

[11] X. Sun et al., "DASKT: A dynamic affect simulation method for knowledge tracing," *IEEE Trans. Knowl. Data Eng.*, vol. 37, no. 4, pp. 1714–1727, Apr. 2025.

[12] S. Wang, Z. Zeng, X. Yang, and X. Zhang, "Self-supervised graph learning for long-tailed cognitive diagnosis," in *Proc. AAAI Conf. Artif. Intell.*, 2023, pp. 110–118.

[13] J. Li et al., "Towards the identifiability and explainability for personalized learner modeling: An inductive paradigm," in *Proc. ACM Web Conf. 2024*, 2024, pp. 3420–3431.

[14] S. Liu, J. Shen, H. Qian, and A. Zhou, "Inductive cognitive diagnosis for fast student learning in web-based intelligent education systems," in *Proc. ACM Web Conf.*, 2024, pp. 4260–4271.

[15] X. Chen et al., "Disentangling cognitive diagnosis with limited exercise labels," in *Proc. Adv. Neural Inf. Process. Syst.*, 2024, pp. 18028–18045.

[16] T. Qi, M. Ren, L. Guo, X. Li, J. Li, and L. Zhang, "ICD: A new interpretable cognitive diagnosis model for intelligent tutor systems," *Expert Syst. Appl.*, vol. 215, 2023, Art. no. 119309 .

[17] J. Zhang, Y. Mo, C. Chen, and X. He, "GKT-CD: Make cognitive diagnosis model enhanced by graph-based knowledge tracing," in *Proc. IEEE 2021 Int. Joint Conf. Neural Netw.*, 2021, pp. 1–8.

[18] F. Wang et al., "Dynamic cognitive diagnosis: An educational priors-enhanced deep knowledge tracing perspective," *IEEE Trans. Learn. Technol.*, vol. 16, no. 3, pp. 306–323, Jun. 2023.

[19] H. Ma et al., "Reconciling cognitive modeling with knowledge forgetting: A continuous time-aware neural network approach," in *Proc. Int. Joint Conf. Artif. Intell.*, 2022, pp. 2174–2181.

[20] C. Piech et al., "Deep knowledge tracing," in *Proc. Adv. Neural Inf. Process. Syst.*, C. Cortes, N. Lawrence,D. Lee, M. Sugiyama, and R. Garnett, Eds., Curran Associates, Inc., 2015, vol. 28, pp. 505–513. [Online]. Available: https://proceedings.neurips.cc/paper_files/paper/2015/file/bac9162b47c56fc8a4d2a519803d51b3-Paper.pdf

[21] A. Zanellati, D. Di Mitri, M. Gabbrielli, and O. Levrini, "Hybrid models for knowledge tracing: A systematic literature review," *IEEE Trans. Learn. Technol.*, vol. 17, pp. 1021–1036, 2024.

[22] H. Nakagawa, Y. Iwasawa, and Y. Matsuo, "Graph-based knowledge tracing: Modeling student proficiency using graph neural network," in *Proc. IEEE/WIC/ACM Int. Conf. Web Intell.*, 2019, pp. 156–163.

[23] C. Cui et al., "Dgekt: A dual graph ensemble learning method for knowledge tracing," *ACM Trans. Inf. Syst.*, vol. 42, no. 3, pp. 1–24, 2024.

[24] X. Sun, K. Zhang, S. Shen, F. Wang, Y. Guo, and Q. Liu, "Target hierarchy-guided knowledge tracing: Fine-grained knowledge state modeling," *Expert Syst. Appl.*, vol. 251, 2024, Art. no. 123898.

[25] L. Bol and D. J. Hacker, "A comparison of the effects of practice tests and traditional review on performance and calibration," *J. Exp. Educ.*, vol. 69, no. 2, pp. 133–151, 2001.

[26] H. L. Roediger III, A. L. Putnam, and M. A. Smith, "Ten benefits of testing and their applications to educational practice," *Psychol. Learn. Motivation*, vol. 55, pp. 1–36, 2011.

[27] A. Nyberg, N. P. Gregersen, and M. Wiklund, "Practicing in relation to the outcome of the driving test," *Accident Anal. Prevention*, vol. 39, no. 1, pp. 159–168, 2007.

[28] A. A. Curcio, G. T. Jones, and T. M. Washington, "Does practice make perfect-an empirical examination of the impact of practice essays on essay exam performance," *Florida State Univ. Law Rev.*, vol. 35, 2007, Art. no. 271.

[29] H. P. Learn, "Brain, mind, experience, and school," *Committee Developments Sci. Learn.*,Washington, DC, USA:,National Academies Press, pp. 116–137, 2000.

[30] H. Ebbinghaus, "A contribution to experimental psychology," New York, NY: Teachers College, Columbia University, 1913.

[31] X. Sun, Q. Liu, K. Zhang, S. Shen, Y. Zhuang, and Y. Guo, "LGS-KT: Integrating logical and grammatical skills for effective programming knowledge tracing," *Neural Netw.*, vol. 185, 2025, Art. no. 107164.

[32] R. C. Atkinson and R. M. Shiffrin, "Human memory: A proposed system and its control processes," in *Psychology of Learning and Motivation*, vol. 2, New York, NY, USA:, Elsevier, 1968, pp. 89–195.

[33] M. Feng, N. Heffernan, and K. Koedinger, "Addressing the assessment challenge with an online system that tutors as it assesses," *User Model. User-Adapted Interact.*, vol. 19, pp. 243–266, 2009.

[34] Y. Choi et al., "EdNet: A large-scale hierarchical dataset in education," in *Proc. Artif. Intell. Educ.: 21st Int. Conf.*, Ifrane, Morocco, 2020, pp. 69–73.

[35] R. Li et al., "PST: Measuring skill proficiency in programming exercise process via programming skill tracing," in *Proc. 45th Int. ACM SIGIR Conf. Res. Develop. Inf. Retrieval*, 2022, pp. 2601–2606.

[36] Z. Zhang et al., "Understanding and improving fairness in cognitive diagnosis," *Sci. China Inf. Sci.*, vol. 67, no. 5, 2024, Art. no. 152106 .

[37] Y. An et al., "Lawyerpan: A proficiency assessment network for trial lawyers," in *Proc. 27th ACM SIGKDD Conf. Knowl. Discov. Data Mining*, 2021, pp. 5–13.

[38] W. Gao et al., "RCD: Relation map driven cognitive diagnosis for intelligent education systems," in *Proc. 44th Int. ACM SIGIR Conf. Res. Develop. Inf. Retrieval*, 2021, pp. 501–510.

[39] X. Fei, Y. Tang, J. Zhang, Z. Zhou, I. Yamamoto, and Y. Zhang, "Evaluating cognitive performance: Traditional methods vs. chatgpt," *Digit. Health*, vol. 10, 2024, Art. no. 20552076241264639.

[40] J. Dunlosky, K. A. Rawson, E. J. Marsh, M. J. Nathan, and D. T. Willingham, "Improving students' learning with effective learning techniques: Promising directions from cognitive and educational psychology," *Psychol. Sci. Public Int.*, vol. 14, no. 1, pp. 4–58, 2013.

Xinjie Sun received the M.E. degree in computer application technology from Northeast University, Shenyang, China, in 2013. He is currently working toward the Ph.D. degree in computer application technology with the School of Computer Science and Technology, University of Science and Technology of China (USTC), Hefei, China.

He has published more than ten high-quality research papers in prestigious international journals and top-tier conferences, including IEEE TKDE, KBS, ESWA, NN, WSDM 2025, DASFAA 2025, and IJCAI 2025. His research interests include data mining, natural language processing, knowledge tracing, cognitive diagnosis, and intelligent tutoring systems.

Mr. Sun also serves as a Reviewer for various leading academic journals in the field.

Qi Liu (Member, IEEE) received the Ph.D. degree in computer application technology from the University of Science and Technology of China (USTC), Hefei, China, in 2013.

He is currently a Professor with USTC. He has published prolifically in refereed journals and conference proceedings, such as TKDE, TOIS, TKDD, TIST, KDD, IJCAI, AAAI, ICDM, SDM, and CIKM. His current research interests include data mining, machine learning, recommender systems, intelligent education systems, and social network analysis.

Dr. Liu was the recipient of the ICDM-2011 Best Research Paper Award, the Special Prize of the President Scholarship for Postgraduate Students, Chinese Academy of Sciences (CAS), and the Distinguished Doctoral Dissertation Award of CAS. He has served regularly on the program committees of a number of conferences. He is a Reviewer for the leading academic journals in his fields.

Authorized licensed use limited to: GUILIN UNIVERSITY OF ELECTRONIC TECHNOLOGY. Downloaded on September 11,2025 at 11:07:02 UTC from IEEE Xplore. Restrictions apply.

This article has been accepted for inclusion in a future issue of this journal. Content is final as presented, with the exception of pagination.

Kai Zhang (Member, IEEE) received the Ph.D. degree in computer application technology from the University of Science and Technology of China (USTC), Hefei, China, in 2023.

He is an Associate Researcher with the USTC. He has published prolifically in refereed journals and conference proceedings, e.g., IEEE TKDE, WWWJ, ACL, IJCAI, AAAI, KDD, SIGIR, WSDM, and WWW. His research interest include natural language processing and knowledge discovery.

Dr. Zhang was the recipient of the CCML 2019 Best Student Paper Award as the first author. He is a Member of ACM, SIGIR, AAAI, and CCF. He has served regularly on the program committees of a number of conferences. He is a Reviewer for the leading academic journals in his fields.

Fei Wang received the Ph.D. degree in computer application technology from the University of Science and Technology of China, Hefei, China, in 2024.

He is currently a Research Fellow with the National University of Singapore, Singapore. He has published in refereed journals and conferences, including IEEE TKDE, IEEE TLT, ACM KDD, AAAI, WWW, and ACM SIGIR. His research interests include data mining, intelligent education systems, AI explanation, and human-centric AI.

Shuanghong Shen received the B.E. degree in computer science and technology from Wuhan University, Wuhan, China, in 2018, and the Ph.D. degree in data science from the University of Science and Technology of China, Hefei, China, in 2024.

He is currently an Associate Researcher with the Institute of Artificial Intelligence, Hefei Comprehensive National Science Center, Hefei. He has published more than 20 papers in refereed journals and conference proceedings, including IEEE Transactions on Knowledge and Data Engineering, Expert Systems with Applications, AAAI 2025, and KDD 2025. His main research interests include data mining, knowledge discovery, natural language processing, and intelligent tutoring systems.

He won the first prize in the CSEDM Data Challenge.

Authorized licensed use limited to: GUILIN UNIVERSITY OF ELECTRONIC TECHNOLOGY. Downloaded on September 11,2025 at 11:07:02 UTC from IEEE Xplore. Restrictions apply.