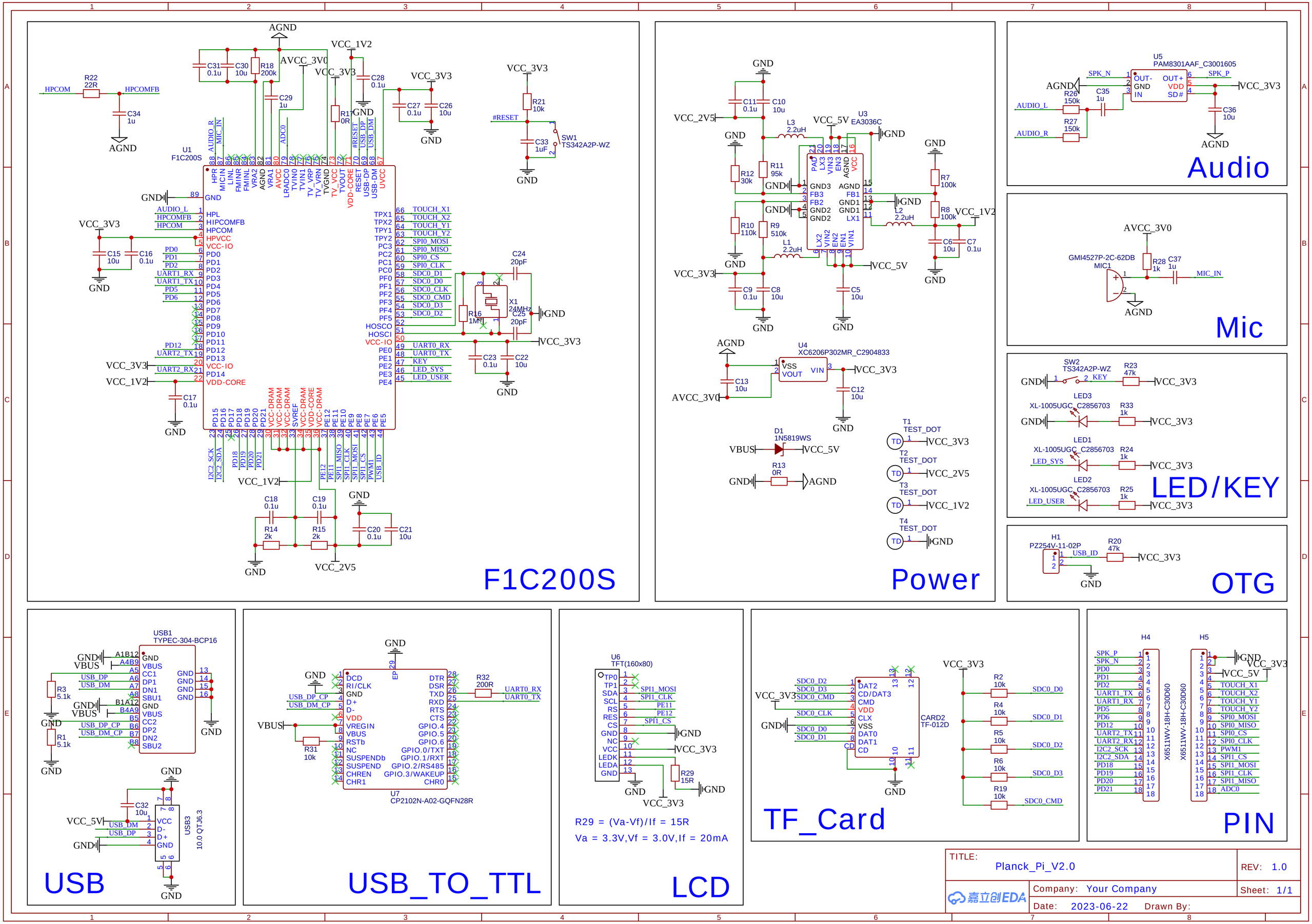
F1C200S
U1
F1C200S
Power
U3
EA3036C
U4
XC6206P302MR_C2904833
U5
PAM8301AAF_C3001605
Audio
Mic
LED/KEY
OTG
USB
USB_TO_TTL
U6
TFT(160x80)
LCD
R29 = (Va-Vf)/If = 15R
Va = 3.3V,Vf = 3.0V,If = 20mA
TF_Card
PIN
TITLE:
Planck_Pi_V2.0
REV: 1.0
Company: Your Company
Sheet: 1/1
Date: 2023-06-22
Drawn By: