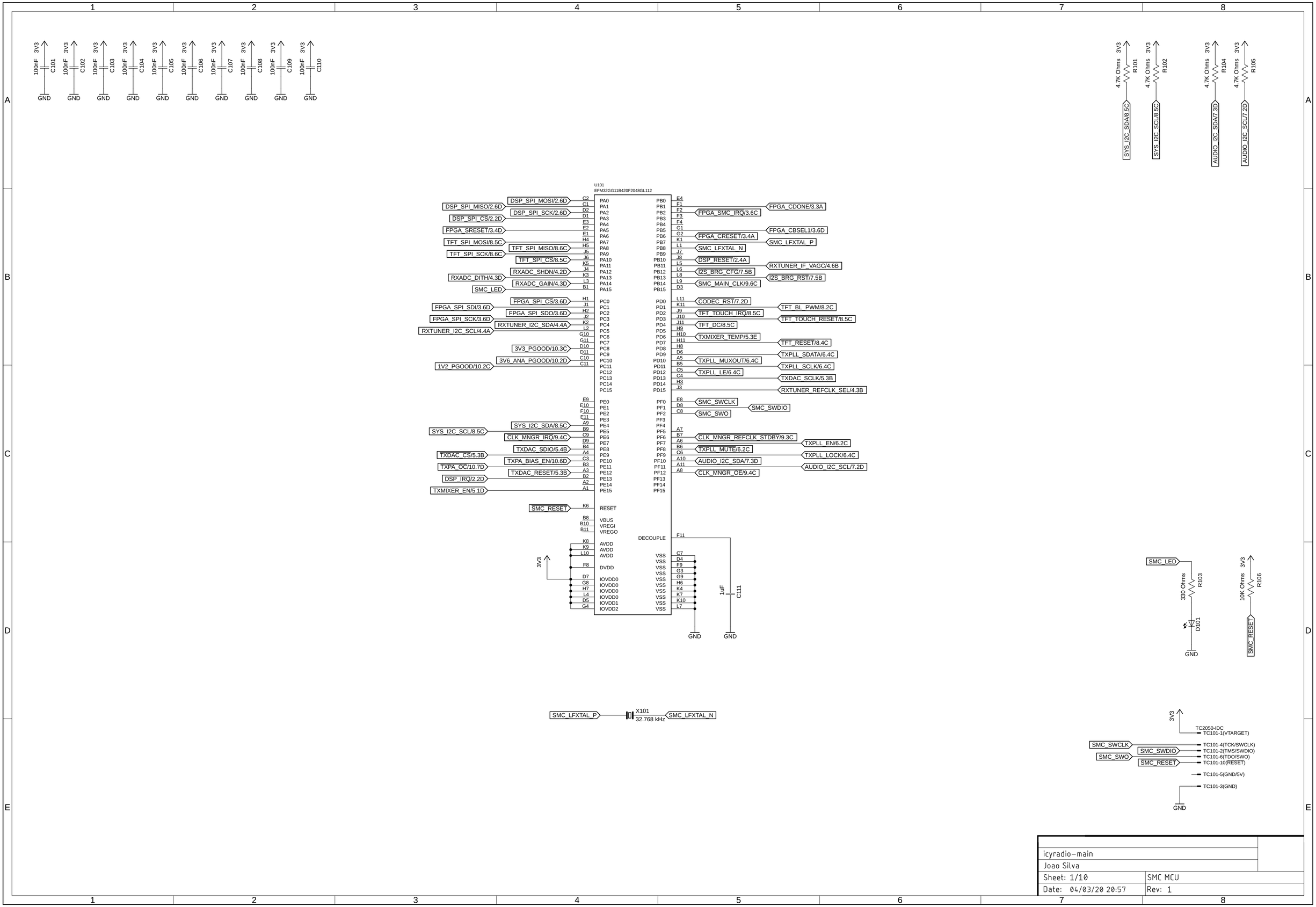
C101 100nF 3V3 GND
C102 100nF 3V3 GND
C103 100nF 3V3 GND
C104 100nF 3V3 GND
C105 100nF 3V3 GND
C106 100nF 3V3 GND
C107 100nF 3V3 GND
C108 100nF 3V3 GND
C109 100nF 3V3 GND
C110 100nF 3V3 GND
R101 4.7K Ohms 3V3 SYS_I2C_SDA/8.5C
R102 4.7K Ohms 3V3 SYS_I2C_SCL/8.5C
R104 4.7K Ohms 3V3 AUDIO_I2C_SDA/7.3D
R105 4.7K Ohms 3V3 AUDIO_I2C_SCL/7.2D
U101
EFM32GG11B420F2048GL112
DSP_SPI_MOSI/2.6D C2 PA0
DSP_SPI_MISO/2.6D C1 PA1
DSP_SPI_SCK/2.6D D2 PA2
DSP_SPI_CS/2.2D D1 PA3
E3 PA4
FPGA_SRESET/3.4D E2 PA5
E1 PA6
TFT_SPI_MOSI/8.5C H4 PA7
TFT_SPI_MISO/8.6C H5 PA8
TFT_SPI_SCK/8.6C J5 PA9
TFT_SPI_CS/8.5C J6 PA10
K5 PA11
RXADC_SHDN/4.2D J4 PA12
RXADC_DITH/4.3D K3 PA13
RXADC_GAIN/4.3D L3 PA14
SMC_LED B1 PA15
FPGA_SPI_CS/3.6D H1 PC0
FPGA_SPI_SDI/3.6D J1 PC1
FPGA_SPI_SDO/3.6D H2 PC2
FPGA_SPI_SCK/3.6D J2 PC3
RXTUNER_I2C_SDA/4.4A K2 PC4
RXTUNER_I2C_SCL/4.4A L2 PC5
G10 PC6
G11 PC7
3V3_PGOOD/10.3C D10 PC8
D11 PC9
3V6_ANA_PGOOD/10.2D C10 PC10
1V2_PGOOD/10.2C C11 PC11
PC12
PC13
PC14
PC15
E9 PE0
E10 PE1
F10 PE2
E11 PE3
SYS_I2C_SDA/8.5C A9 PE4
SYS_I2C_SCL/8.5C B9 PE5
CLK_MNGR_IRQ/9.4C C9 PE6
D9 PE7
TXDAC_SDIO/5.4B B4 PE8
TXDAC_CS/5.3B A4 PE9
TXPA_BIAS_EN/10.6D C3 PE10
TXPA_OC/10.7D B3 PE11
TXDAC_RESET/5.3B A3 PE12
DSP_IRQ/2.2D B2 PE13
A2 PE14
TXMIXER_EN/5.1D A1 PE15
SMC_RESET K6 RESET
B8 VBUS
B10 VREGI
B11 VREGO
DECOUPLE F11
K8 AVDD
K9 AVDD
L10 AVDD
F8 DVDD
D7 IOVDD0
G8 IOVDD0
H7 IOVDD0
L4 IOVDD0
D5 IOVDD1
G4 IOVDD2
3V3
PB0 E4
PB1 F1
PB2 F2 FPGA_SMC_IRQ/3.6C
PB3 F3
PB4 F4
PB5 G1 FPGA_CBSEL1/3.6D
PB6 G2 FPGA_CRESET/3.4A
PB7 K1 SMC_LFXTAL_P
PB8 L1 SMC_LFXTAL_N
PB9 J7
PB10 J8 DSP_RESET/2.4A
PB11 L5 RXTUNER_IF_VAGC/4.6B
PB12 L6 I2S_BRG_CFG/7.5B
PB13 L8 I2S_BRG_RST/7.5B
PB14 L9 SMC_MAIN_CLK/9.6C
PB15 D3
PD0 L11 CODEC_RST/7.2D
PD1 K11 TFT_BL_PWM/8.2C
PD2 J9 TFT_TOUCH_IRQ/8.5C
PD3 J10 TFT_TOUCH_RESET/8.5C
PD4 J11 TFT_DC/8.5C
PD5 H9
PD6 H10 TXMIXER_TEMP/5.3E
PD7 H11 TFT_RESET/8.4C
PD8 H8
PD9 D6 TXPLL_SDATA/6.4C
PD10 A5 TXPLL_MUXOUT/6.4C
PD11 B5 TXPLL_SCLK/6.4C
PD12 C5 TXPLL_LE/6.4C
PD13 C4 TXDAC_SCLK/5.3B
PD14 H3
PD15 J3 RXTUNER_REFCLK_SEL/4.3B
PF0 E8 SMC_SWCLK
PF1 D8 SMC_SWDIO
PF2 C8 SMC_SWO
PF3
PF4
PF5 A7
PF6 B7 CLK_MNGR_REFCLK_STDBY/9.3C
PF7 A6 TXPLL_EN/6.2C
PF8 B6 TXPLL_MUTE/6.2C
PF9 C6 TXPLL_LOCK/6.4C
PF10 A10 AUDIO_I2C_SDA/7.3D
PF11 A11 AUDIO_I2C_SCL/7.2D
PF12 A8 CLK_MNGR_OE/9.4C
PF13
PF14
PF15
C7 VSS
D4 VSS
F9 VSS
G3 VSS
G9 VSS
H6 VSS
K4 VSS
K7 VSS
K10 VSS
L7 VSS
1uF C111
GND
SMC_LED
330 Ohms R103
D101
10K Ohms 3V3 R106
SMC_RESET
SMC_LFXTAL_P X101 32.768 kHz SMC_LFXTAL_N
3V3
TC2050-IDC
TC101-1(VTARGET)
SMC_SWCLK TC101-4(TCK/SWCLK)
SMC_SWDIO TC101-2(TMS/SWDIO)
SMC_SWO TC101-6(TDO/SWO)
SMC_RESET TC101-10(RESET)
TC101-5(GND/5V)
TC101-3(GND)
icyradio-main
Joao Silva
Sheet: 1/10
SMC MCU
Date: 04/03/20 20:57
Rev: 1

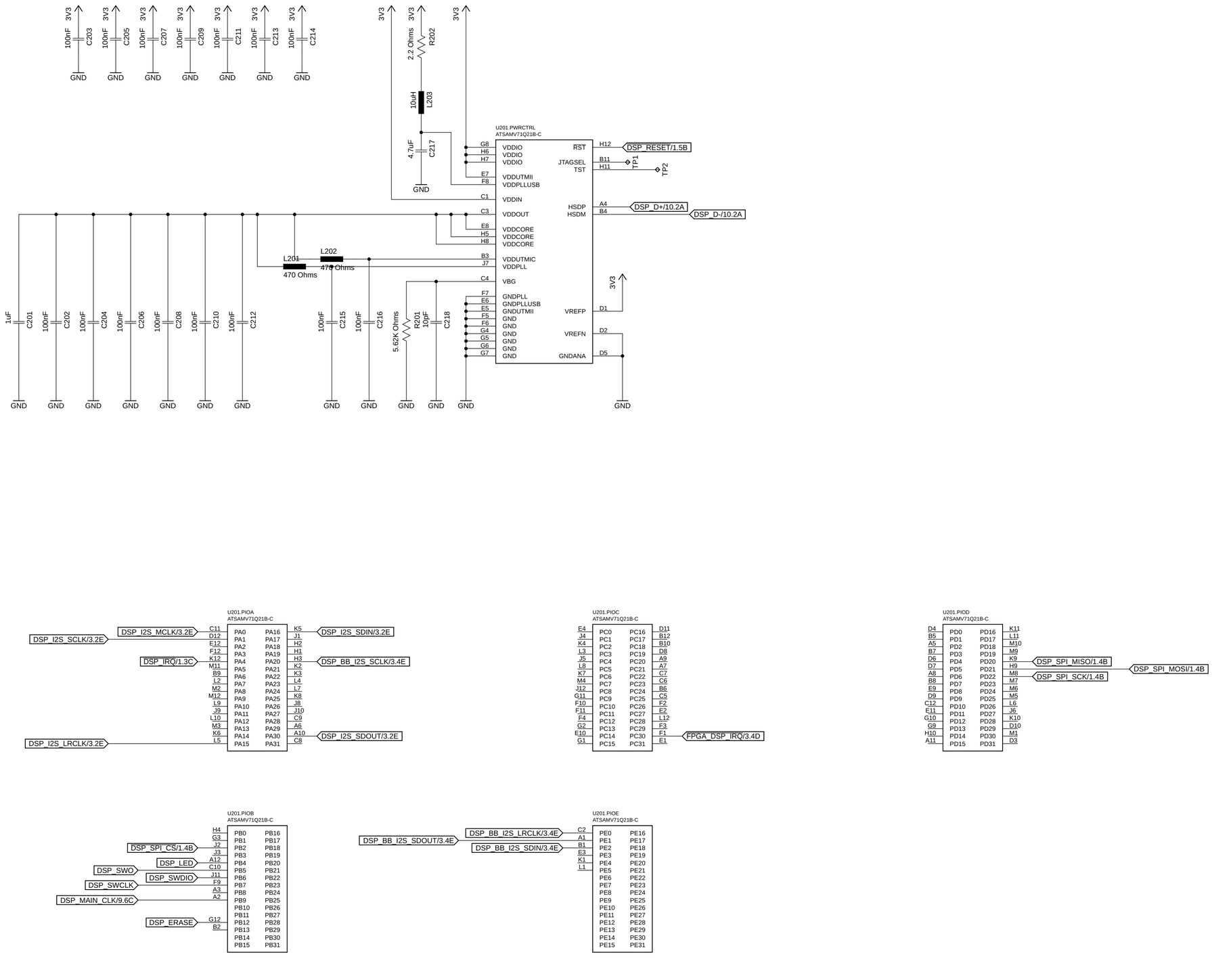

icyradio-main	
Joao Silva	
Sheet: 2/10	DSP MCU
Date: 04/03/20 20:57	Rev: 1

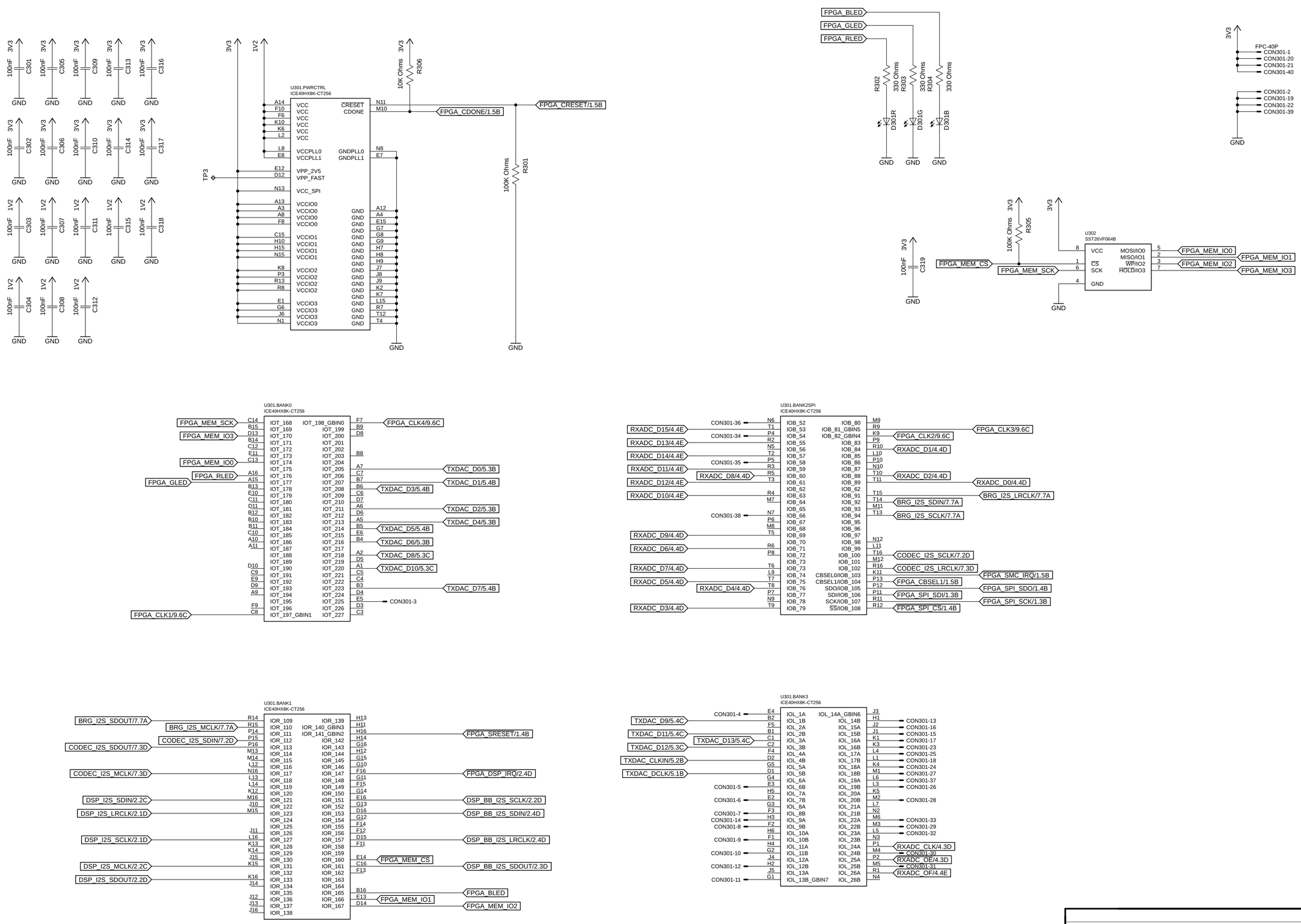

icyradio-main	
Joao Silva	
Sheet: 3/10	FPGA
Date: 04/03/20 20:57	Rev: 1

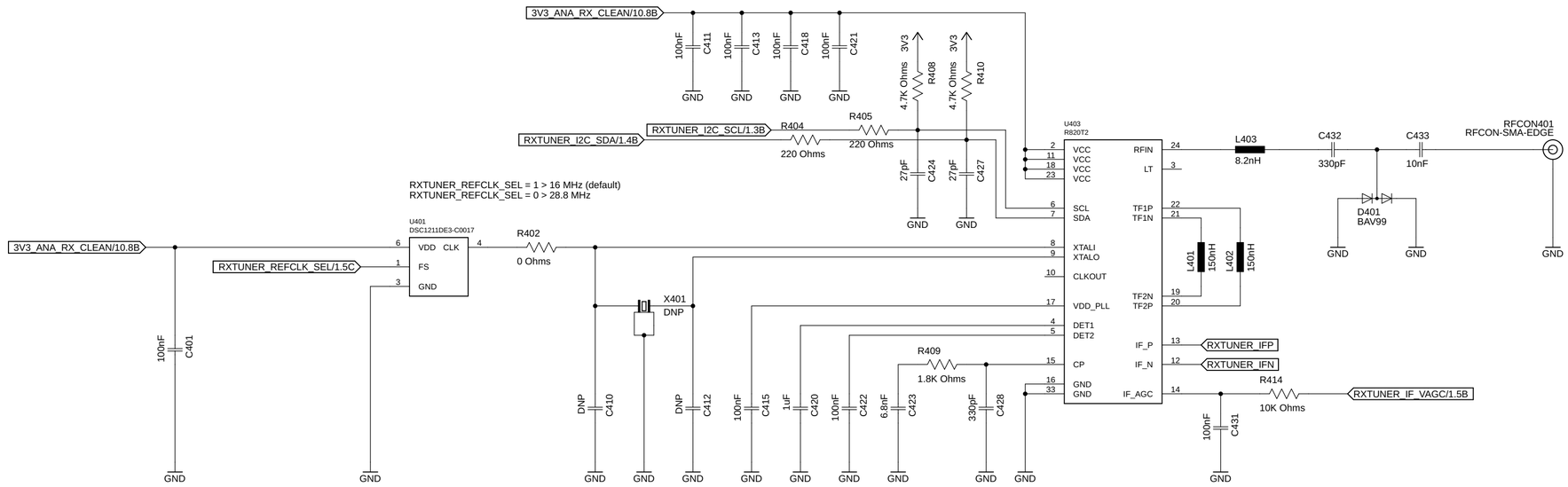

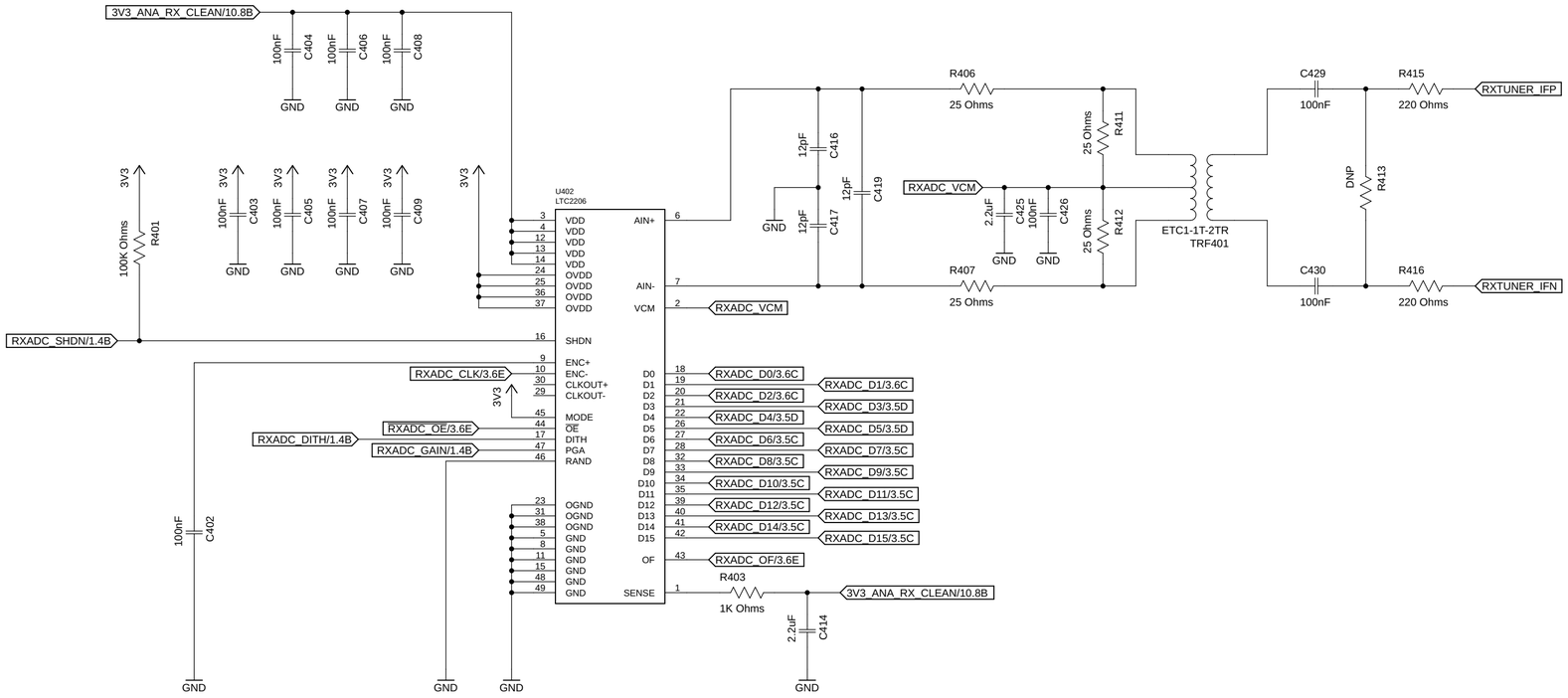

icyradio-main	
Joao Silva	
Sheet: 4/10	RX Tumer + RX IF ADC
Date: 04/03/20 20:57	Rev: 1

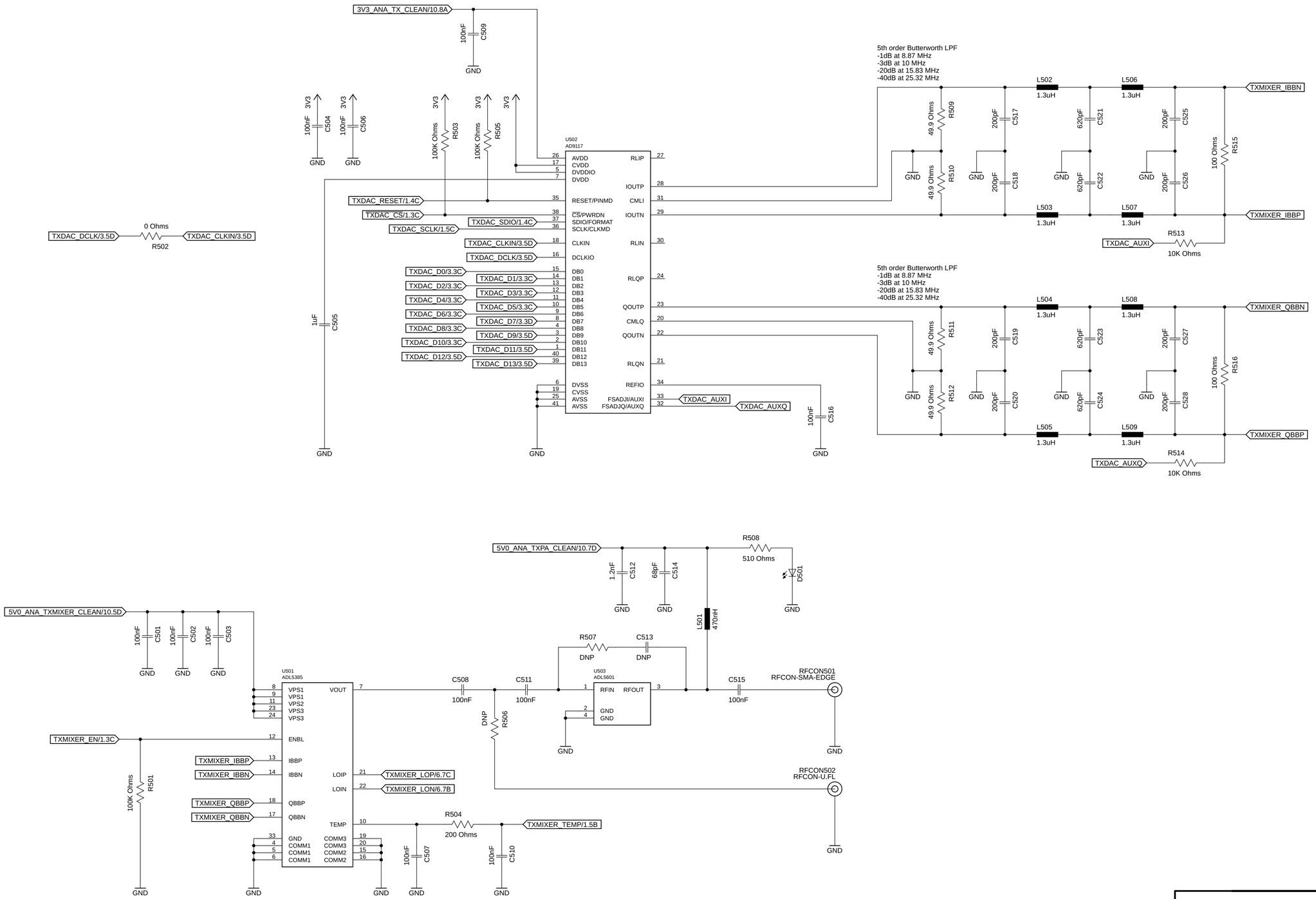

icyradio-main	
Joao Silva	
Sheet: 5/10	TX BB DAC + Upconverting Mixer
Date: 04/03/20 20:57	Rev: 1

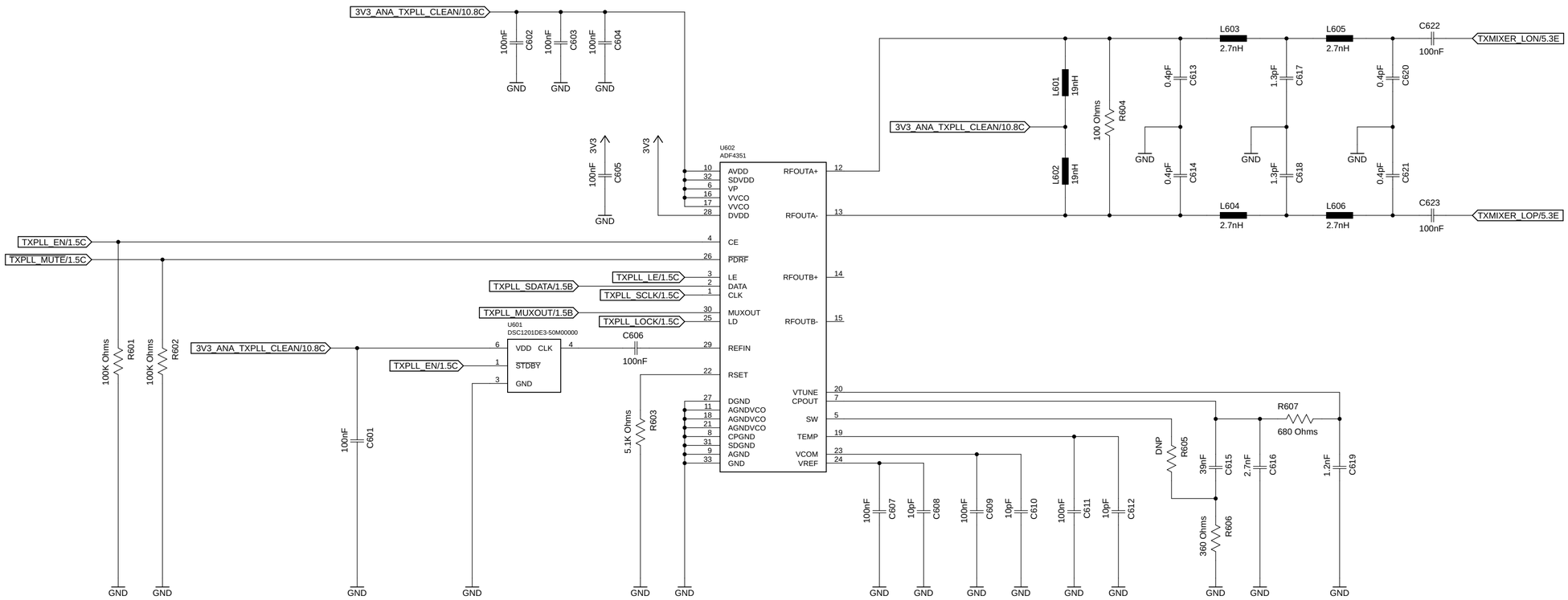

icyradio-main	
Joao Silva	
Sheet: 6/10	TX LO Synthesizer
Date: 04/03/20 20:57	Rev: 1

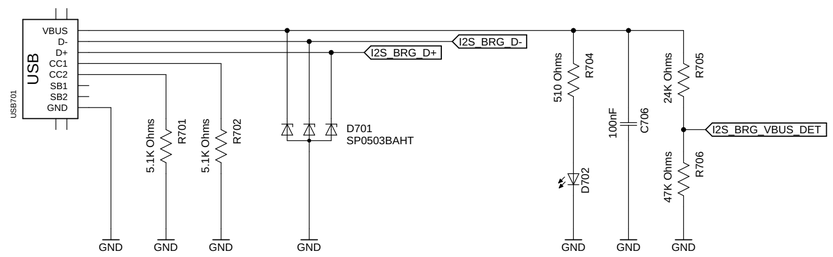

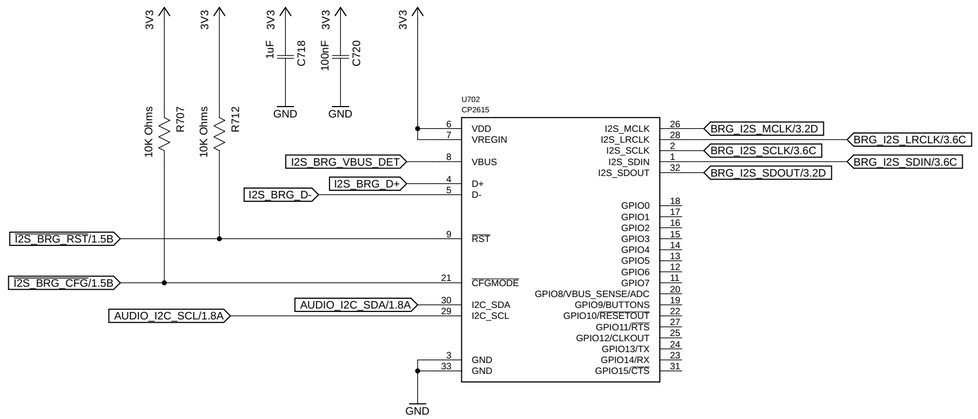

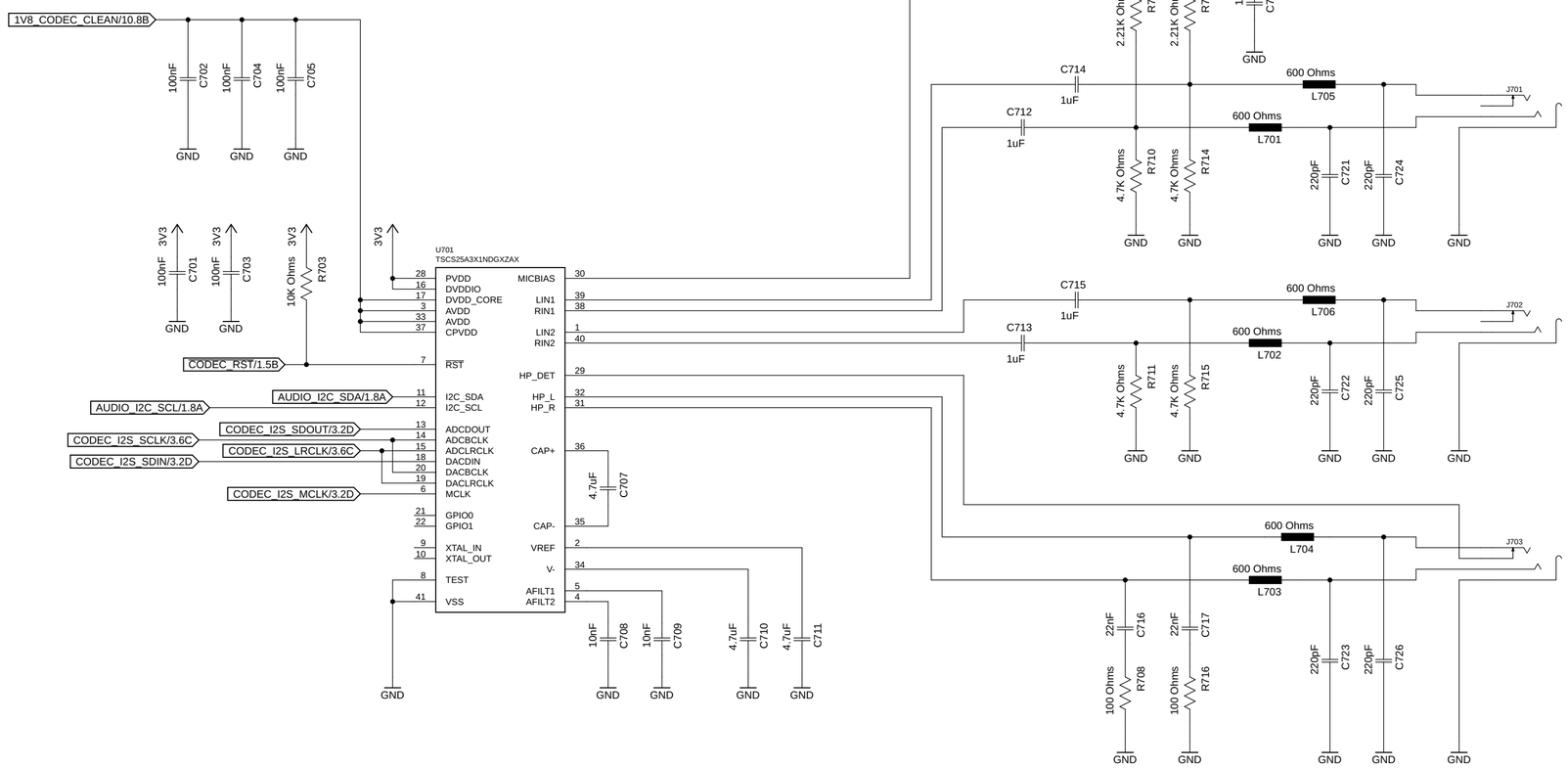

icyradio-main	
Joao Silva	
Sheet: 7/10	USB I2S bridge + CODEC
Date: 04/03/20 20:57	Rev: 1

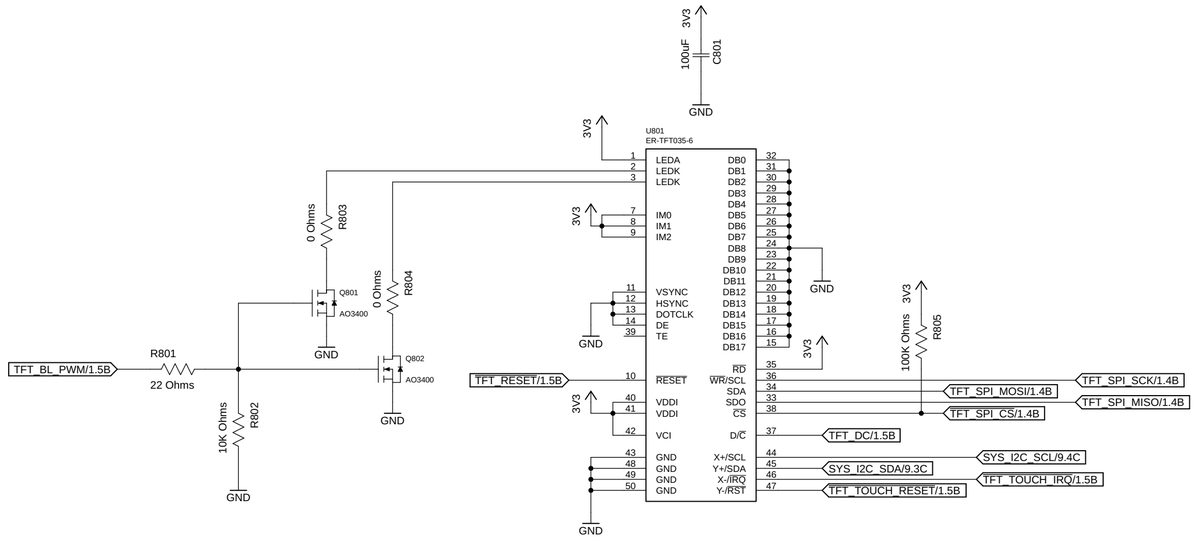

icyradio-main	
Joao Silva	
Sheet: 8/10	TFT Display
Date: 04/03/20 20:57	Rev: 1

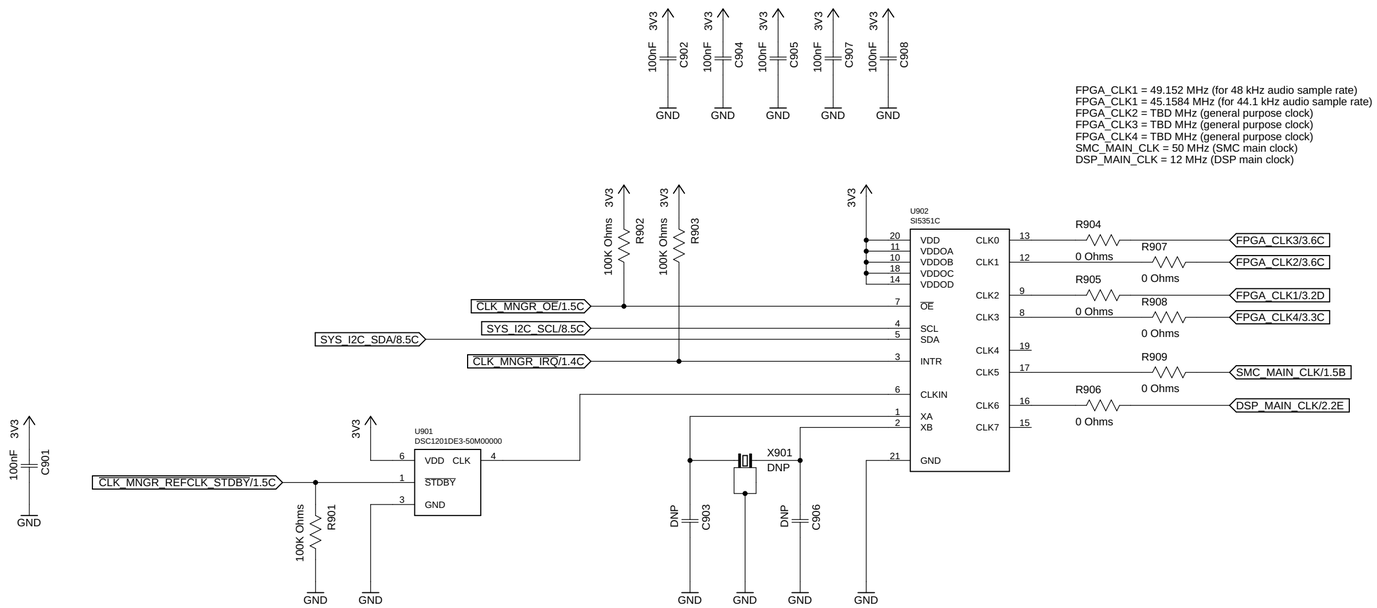

icyradio-main

Joao Silva

Sheet: 9/10 | Clock generator

Date: 04/03/20 20:57 | Rev: 1

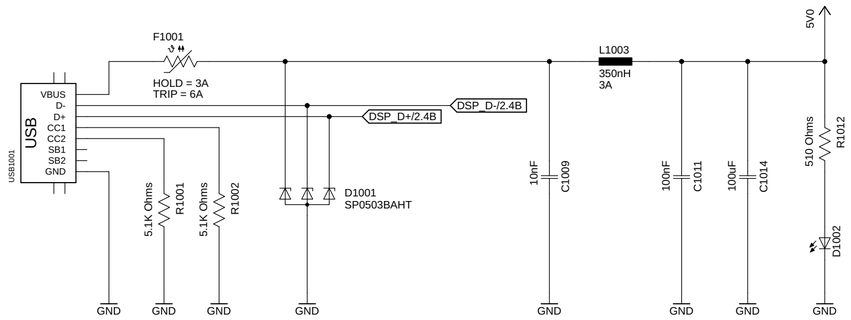

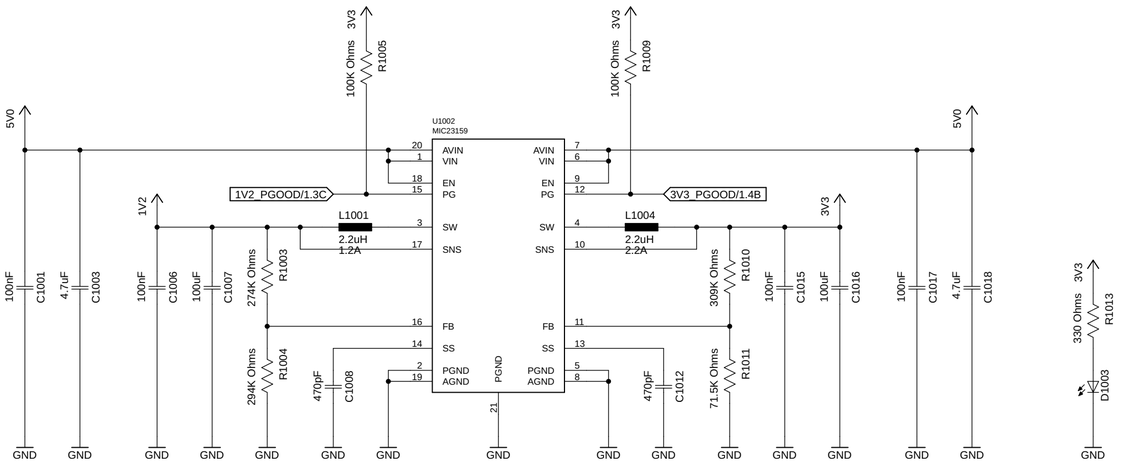

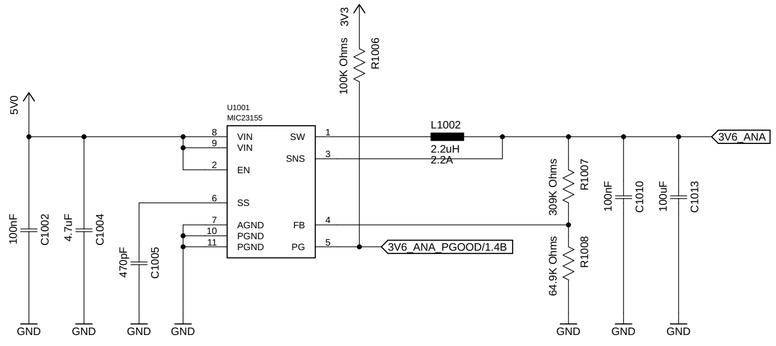

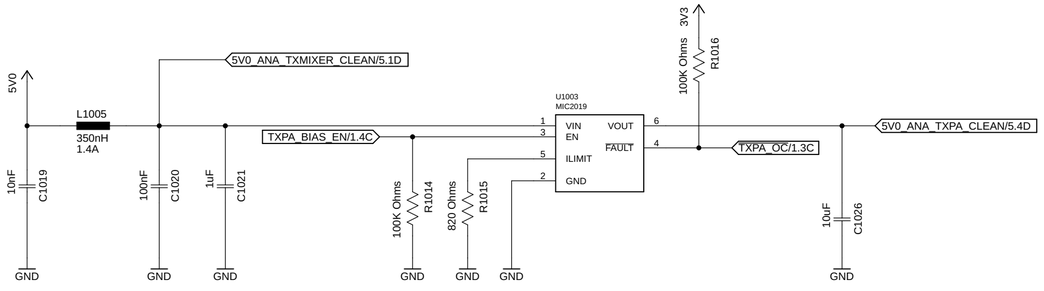

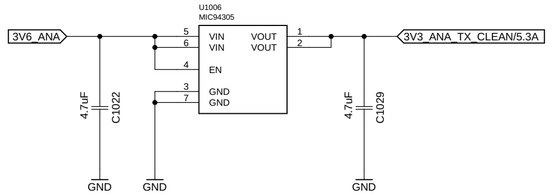

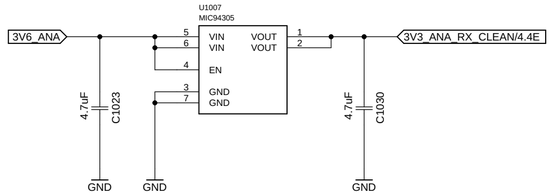

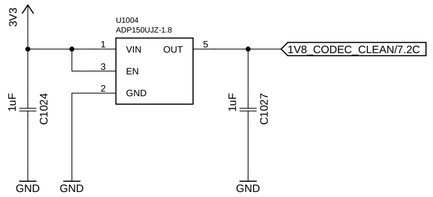

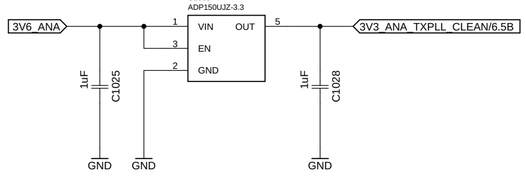

icyradio-main	
Joao Silva	
Sheet: 10/10	Power
Date: 04/03/20 20:57	Rev: 1