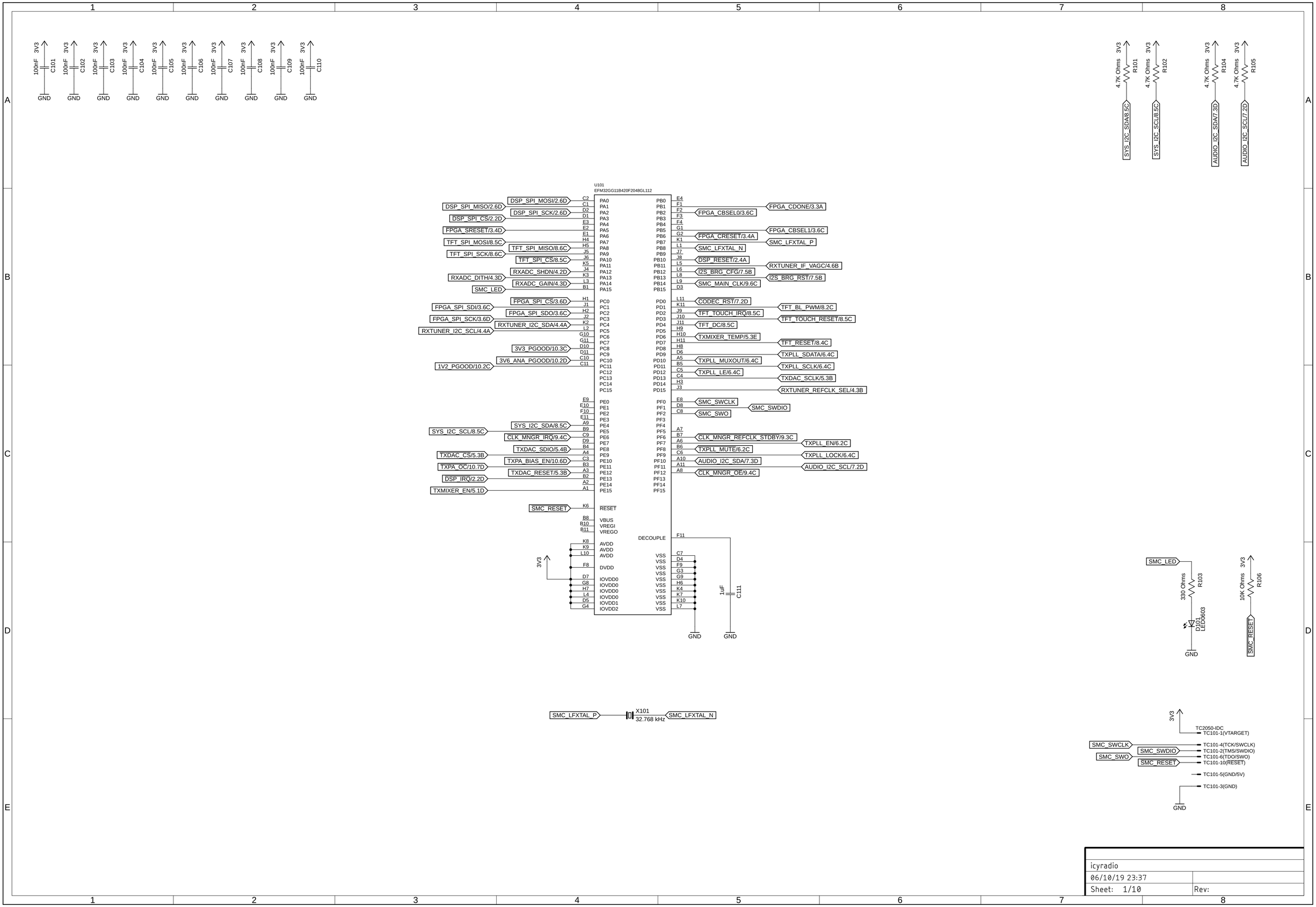

icyradio	
06/10/19 23:37	
Sheet: 1/10	Rev:

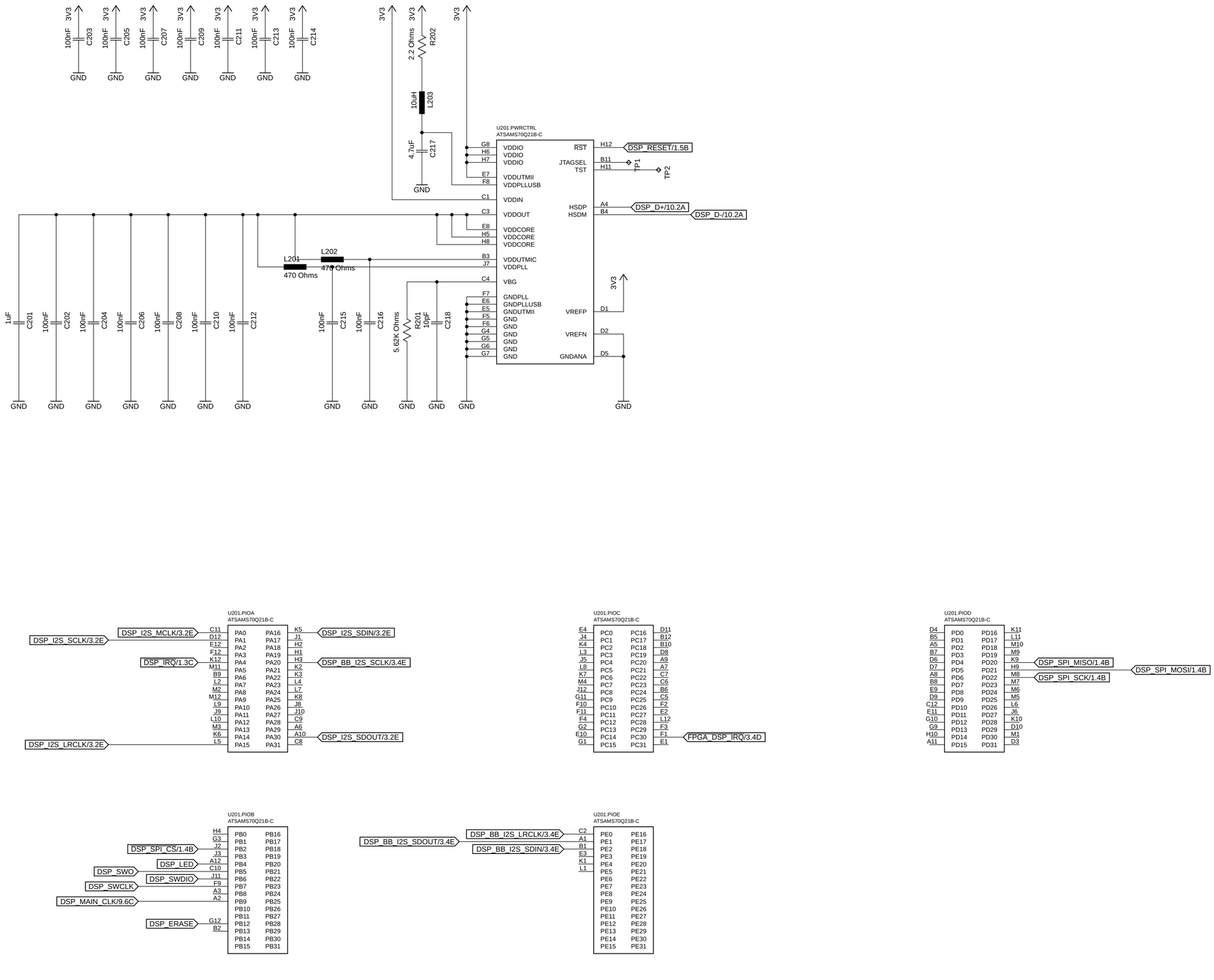

icyradio

06/10/19 23:37

Sheet: 2/10

Rev:

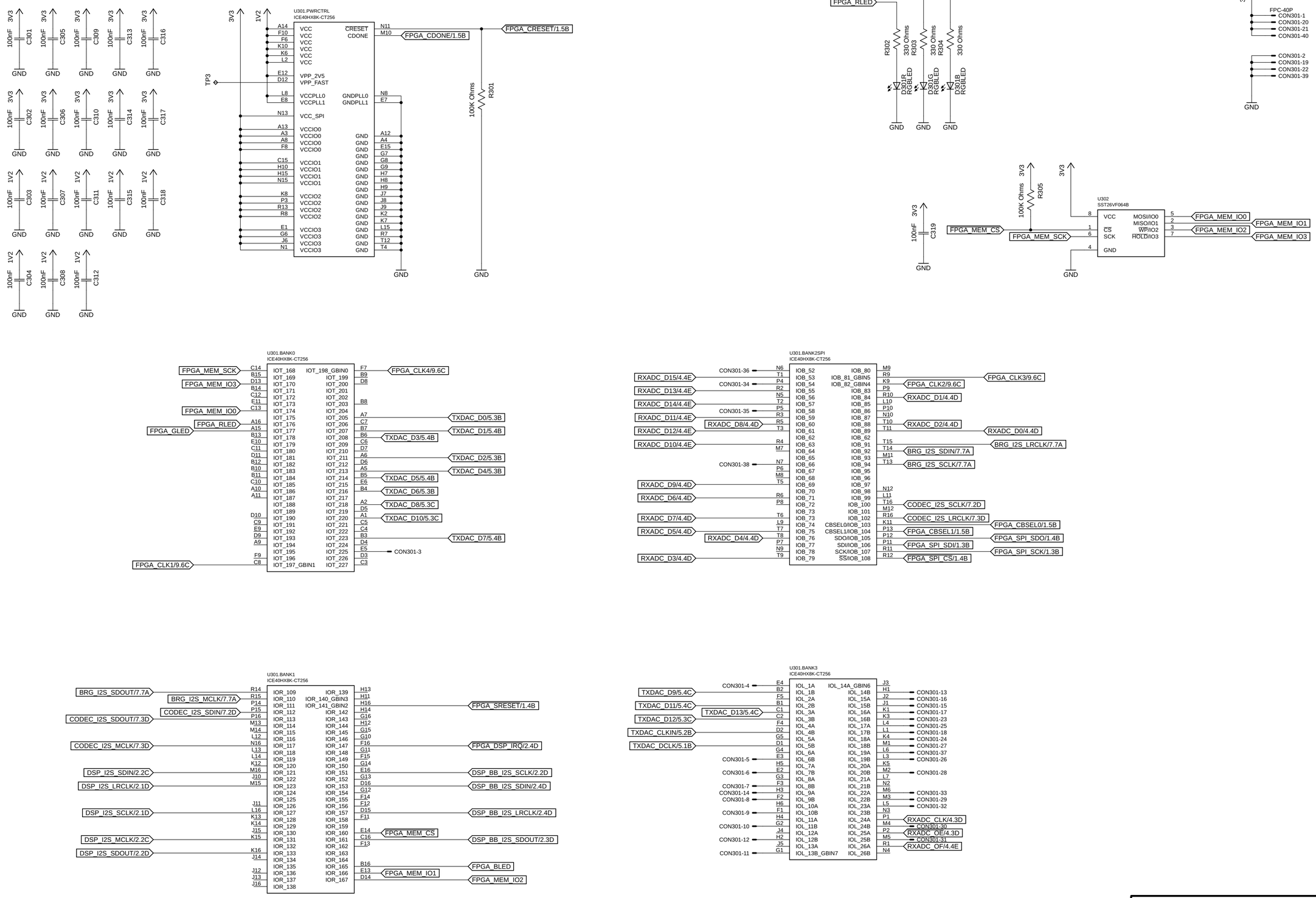

icyradio

06/10/19 23:37

Sheet: 3/10

Rev:

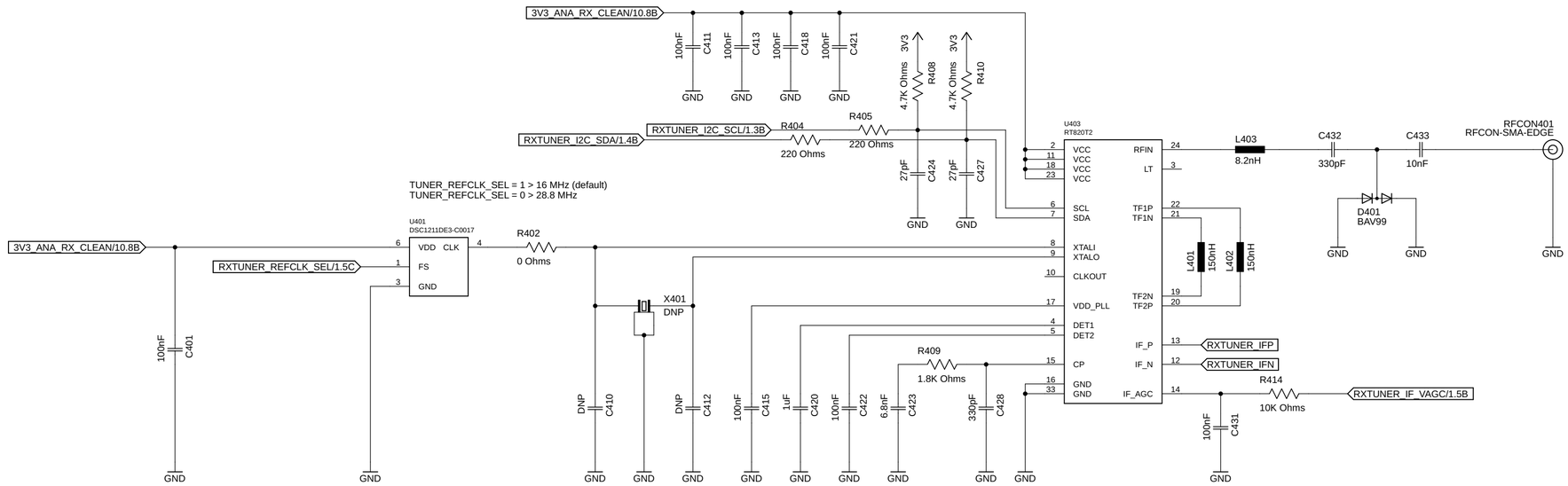

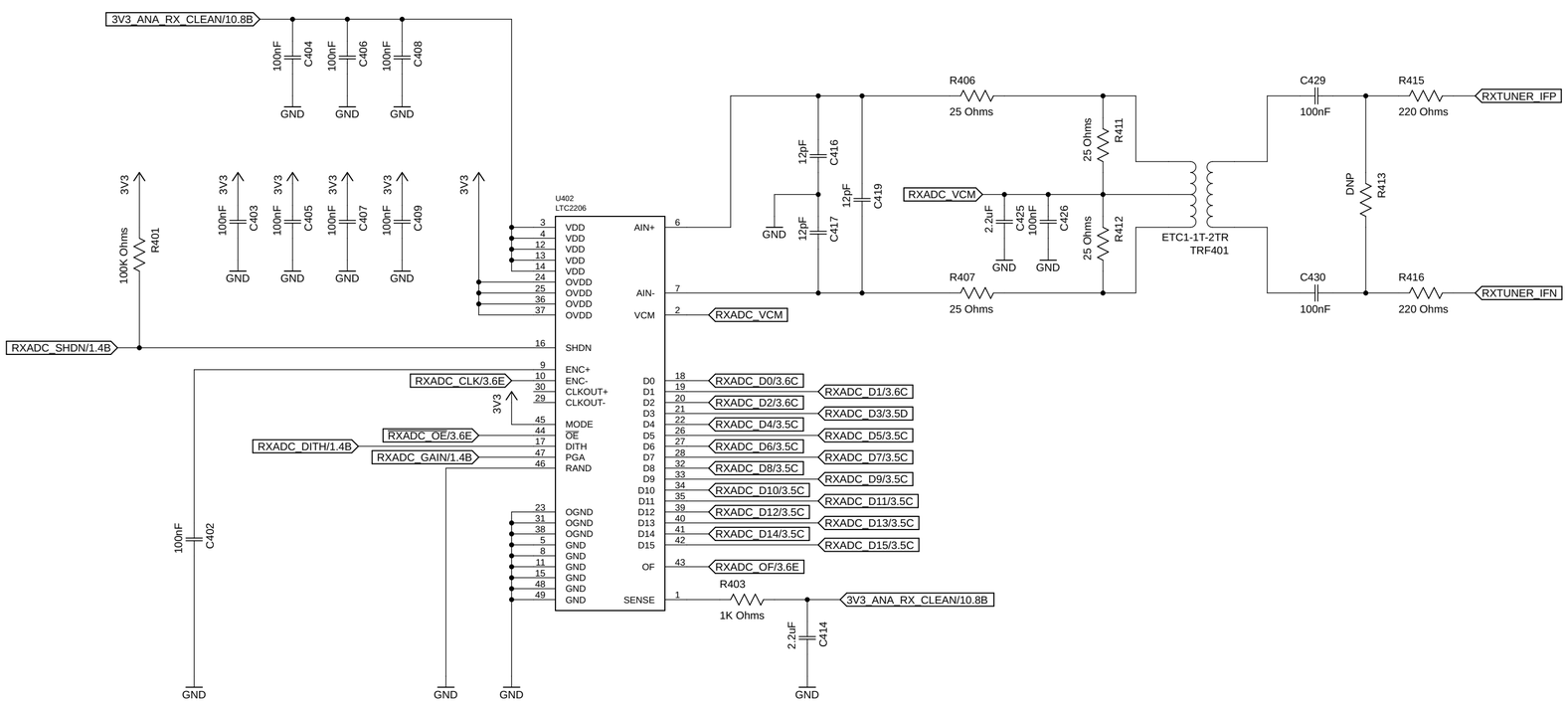

icyradio	
06/10/19 23:37	
Sheet: 4/10	Rev:

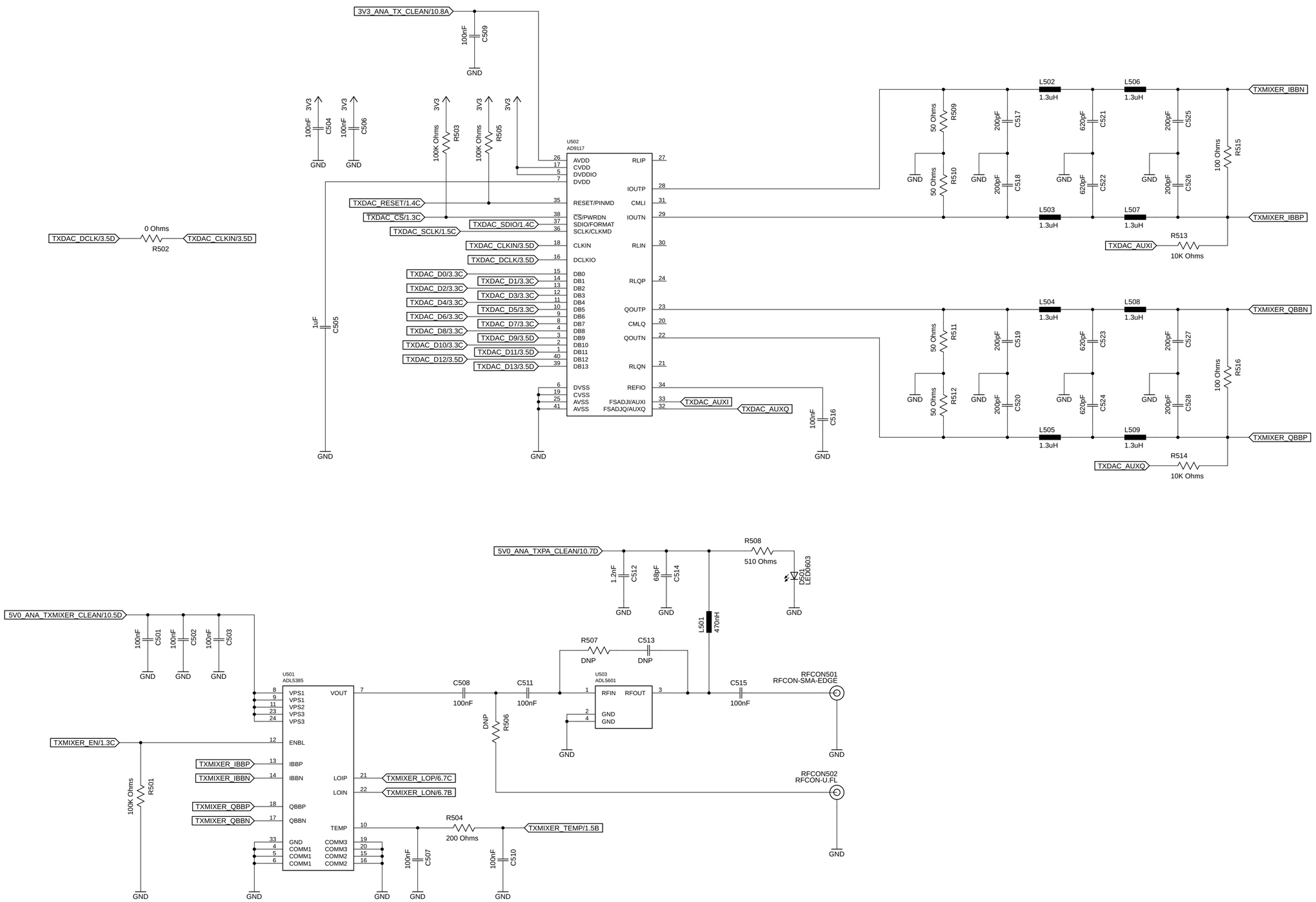

icyradio

06/10/19 23:37

Sheet: 5/10

Rev:

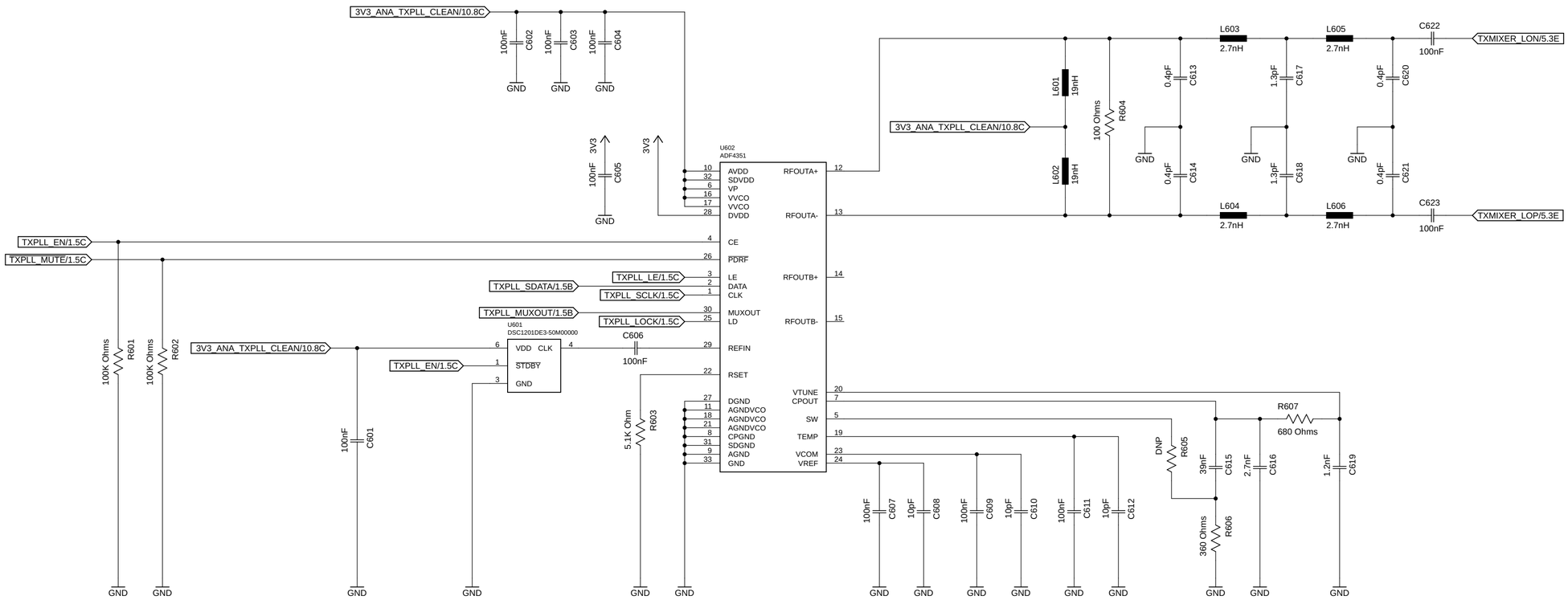

icyradio

06/10/19 23:37

Sheet: 6/10

Rev:

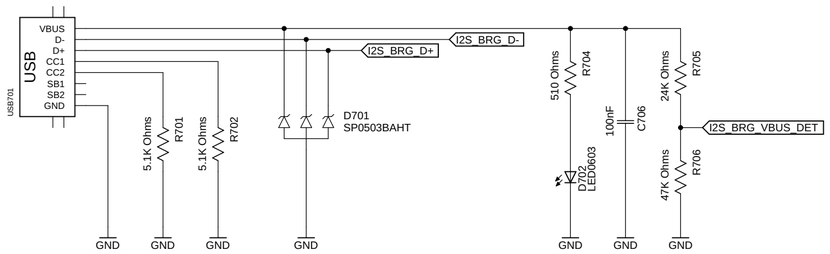

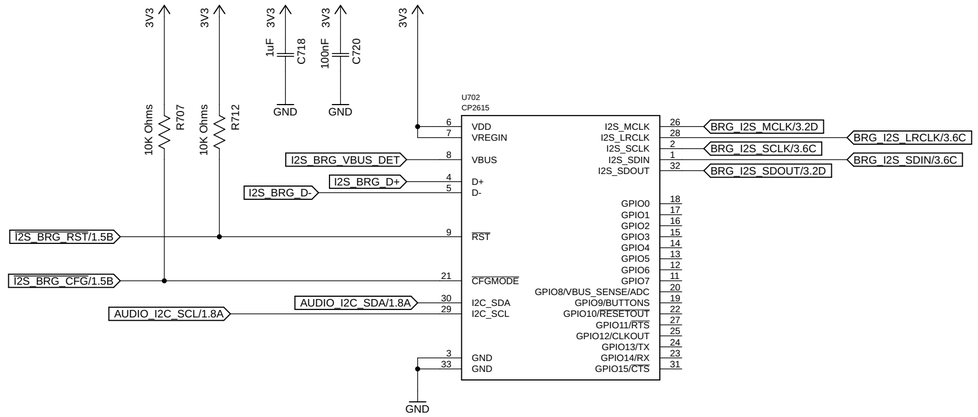

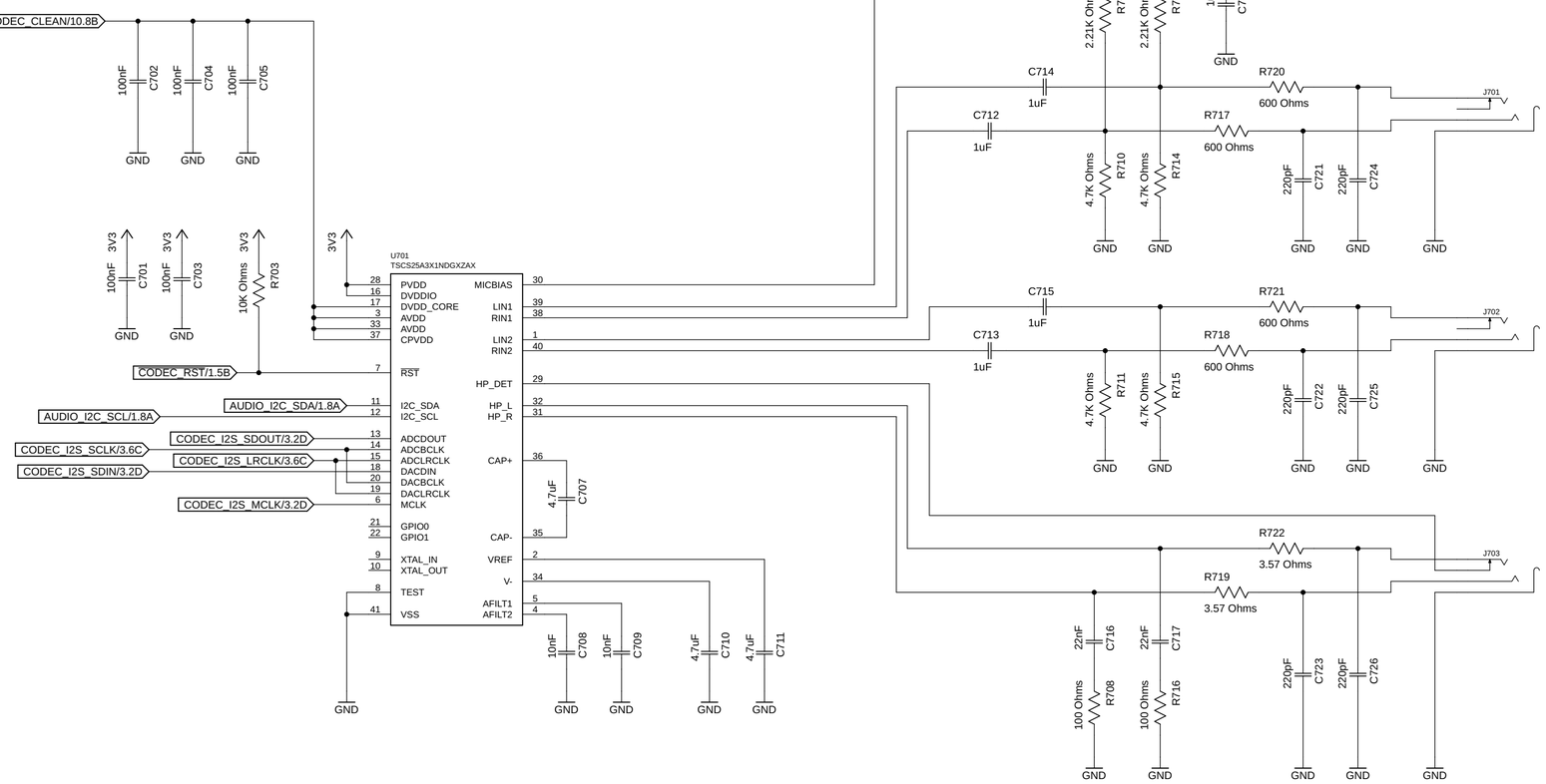

icyradio	
06/10/19 23:37	
Sheet: 7/10	Rev:

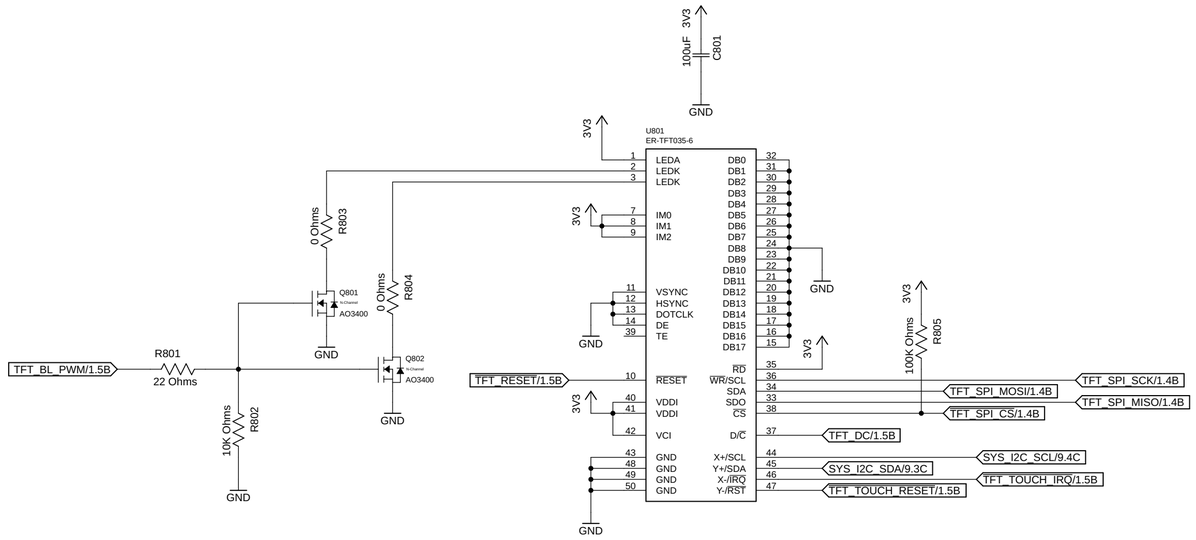

icyradio	
06/10/19 23:37	
Sheet: 8/10	Rev:

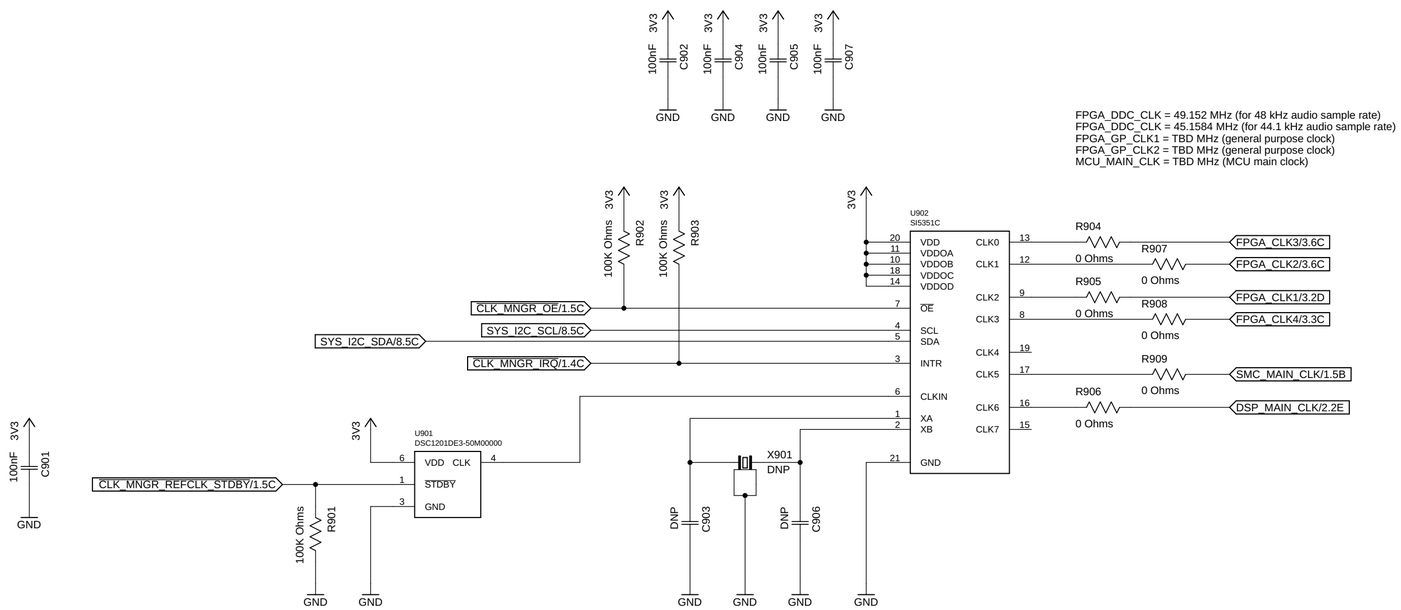

icyradio

06/10/19 23:37

Sheet: 9/10

Rev:

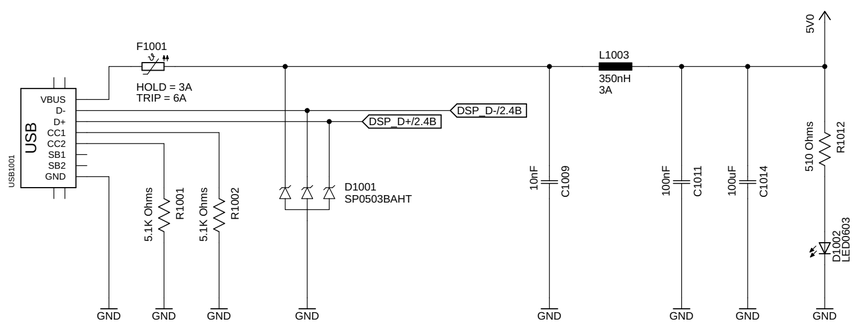

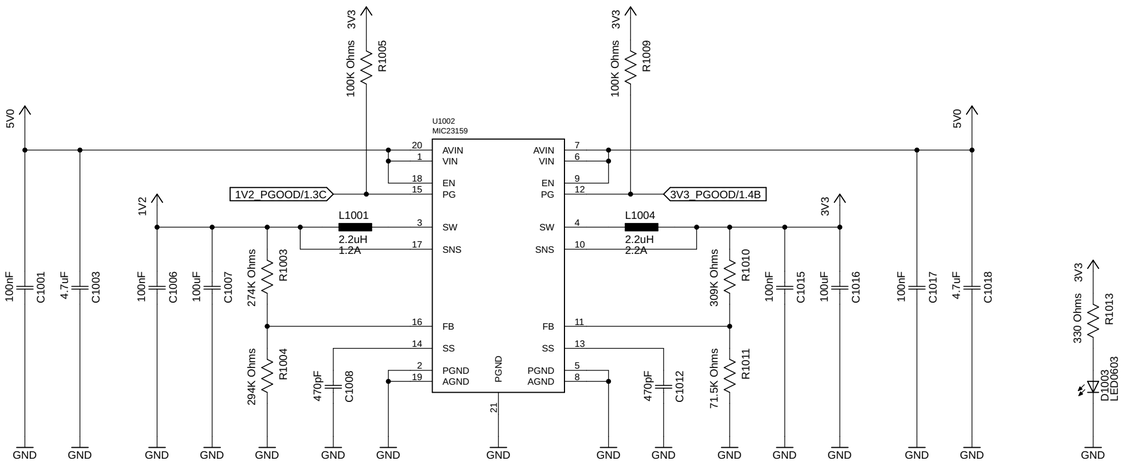

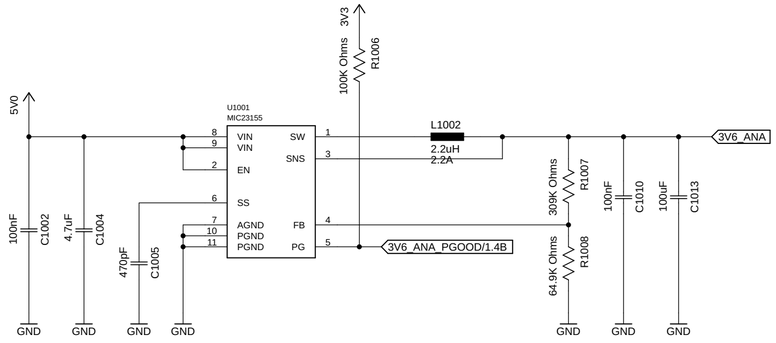

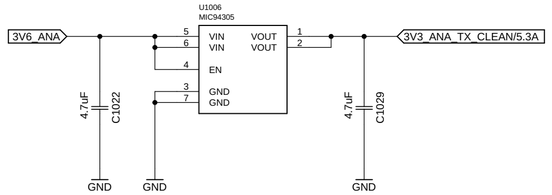

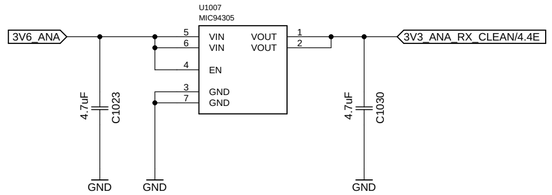

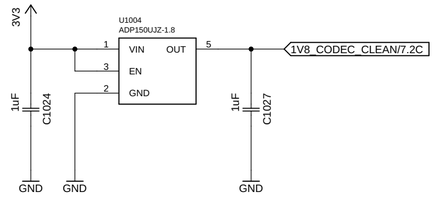

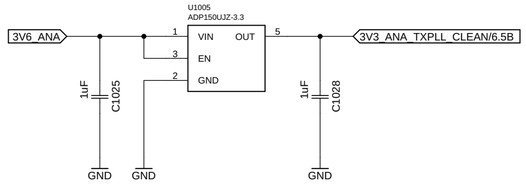

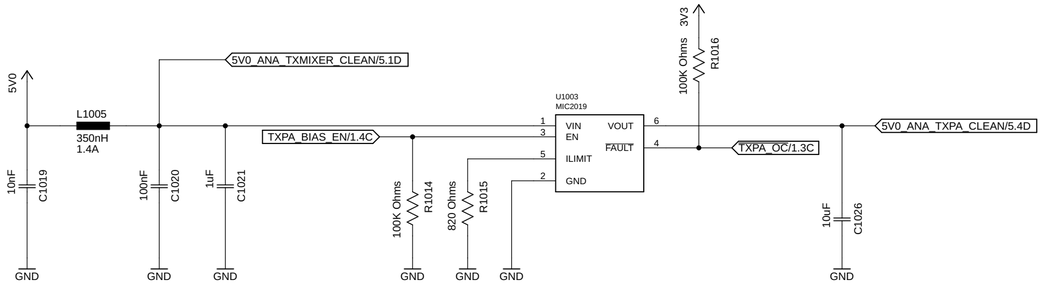

icyradio

06/10/19 23:37

Sheet: 10/10

Rev: