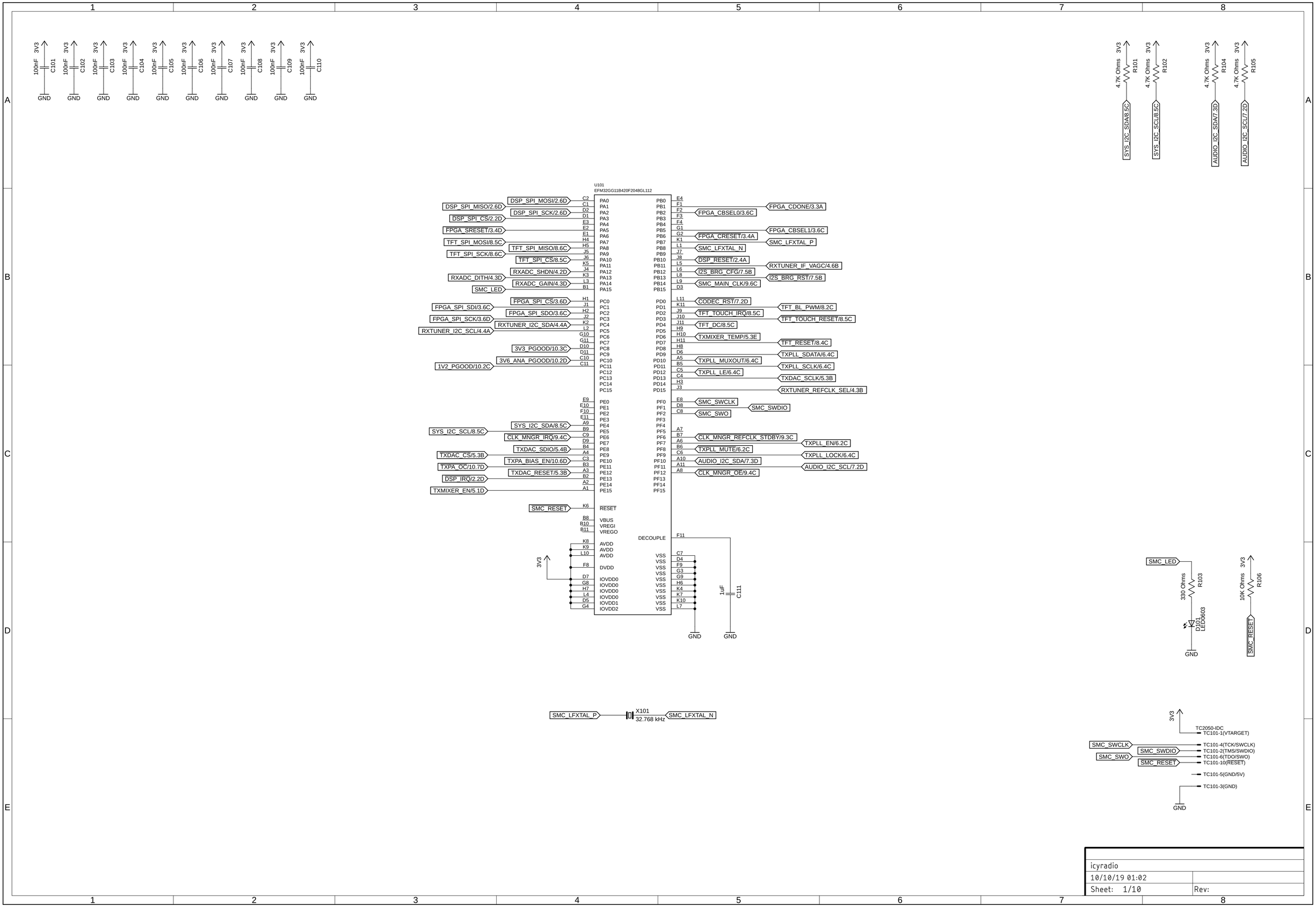

icyradio	
10/10/19 01:02	
Sheet: 1/10	Rev:

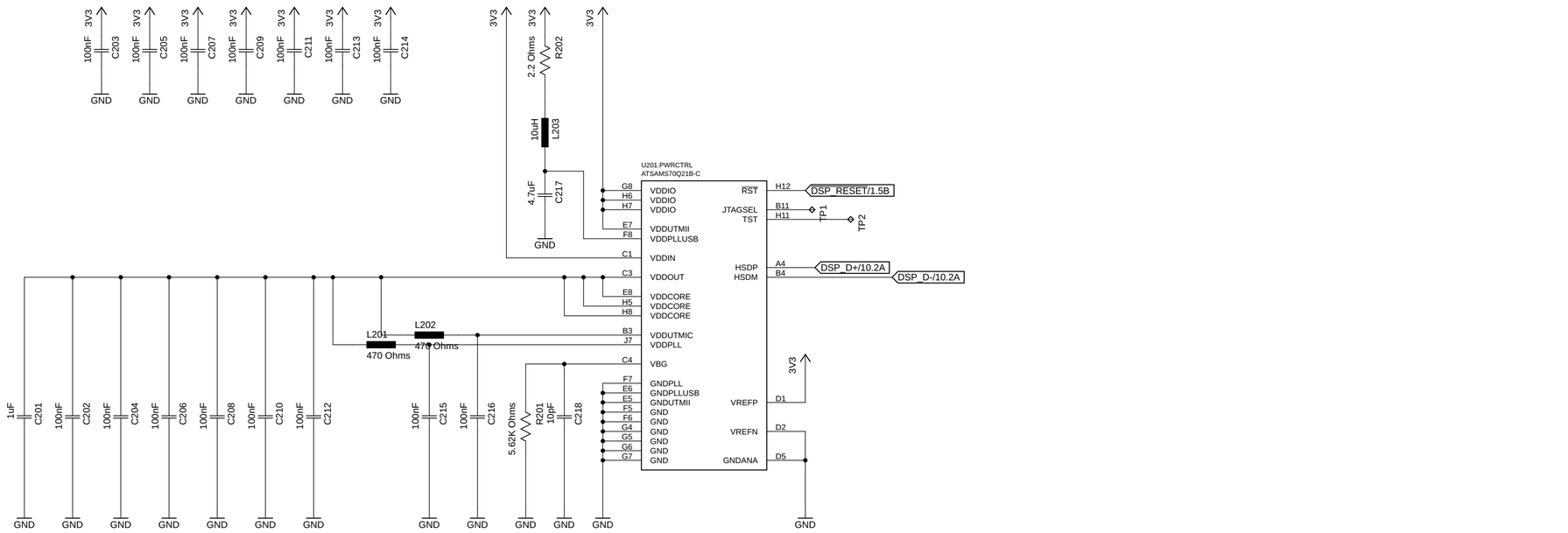

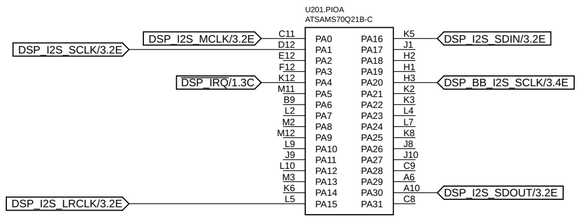

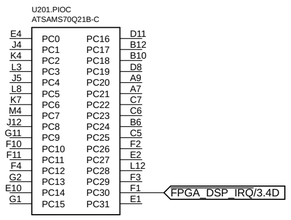

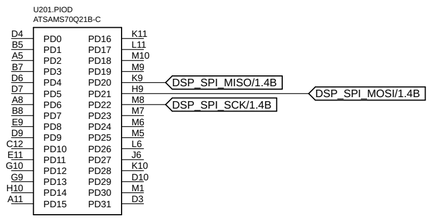

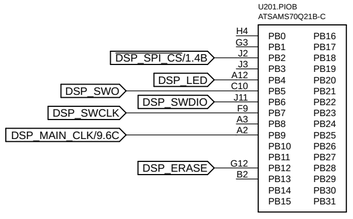

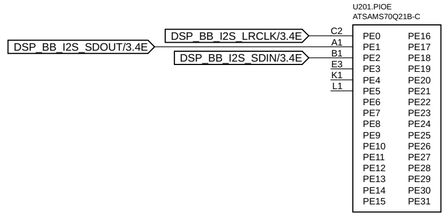

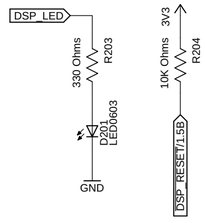

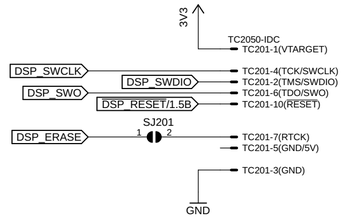

icyradio	
10/10/19 01:02	
Sheet: 2/10	Rev:

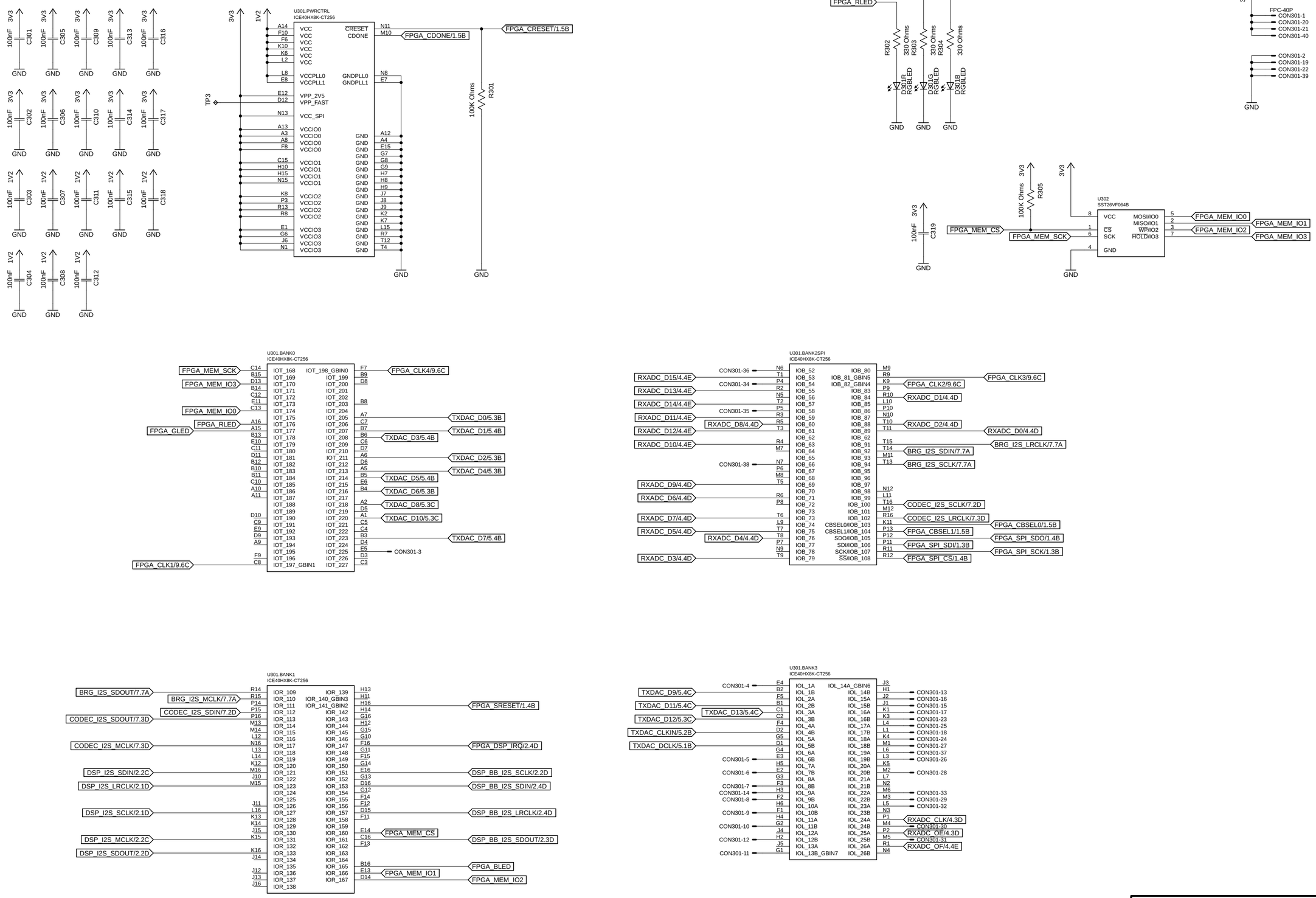

icyradio

10/10/19 01:02

Sheet: 3/10

Rev:

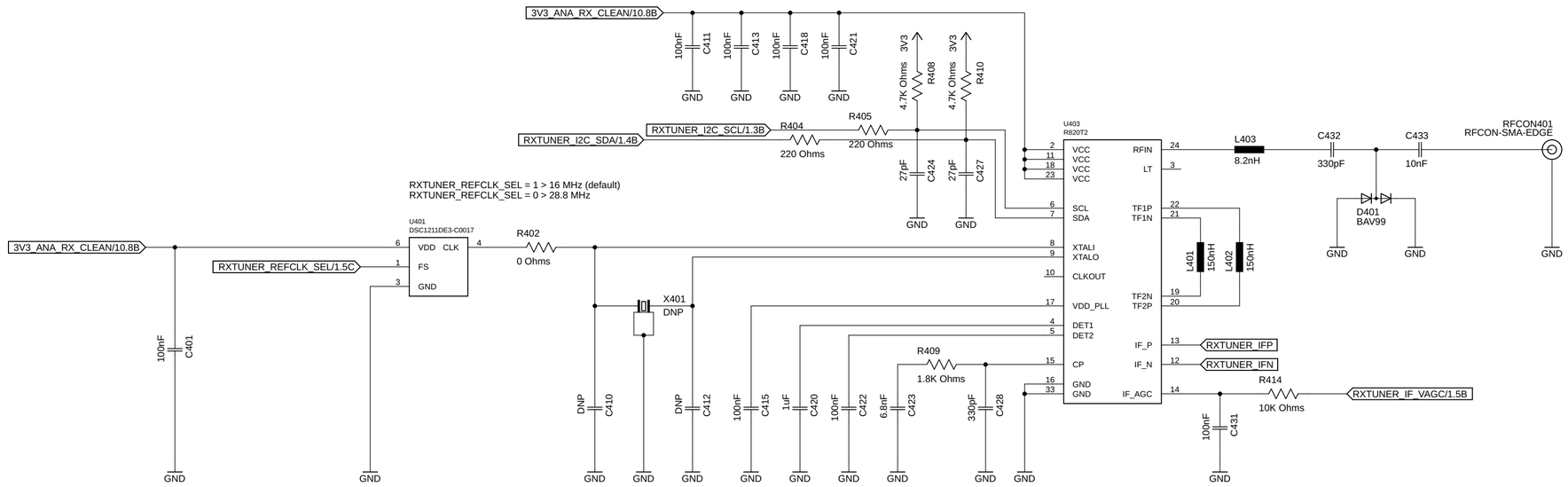

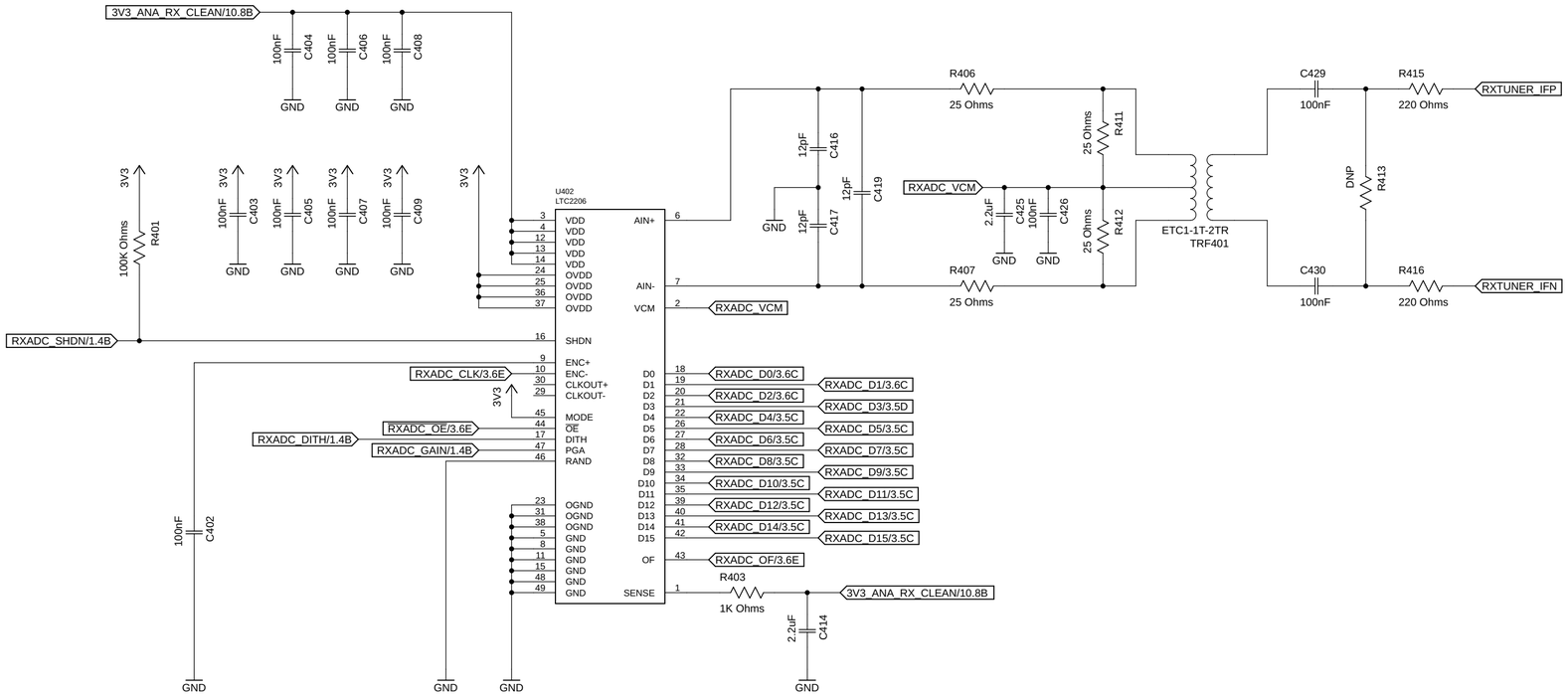

icyradio	
10/10/19 01:02	
Sheet: 4/10	Rev:

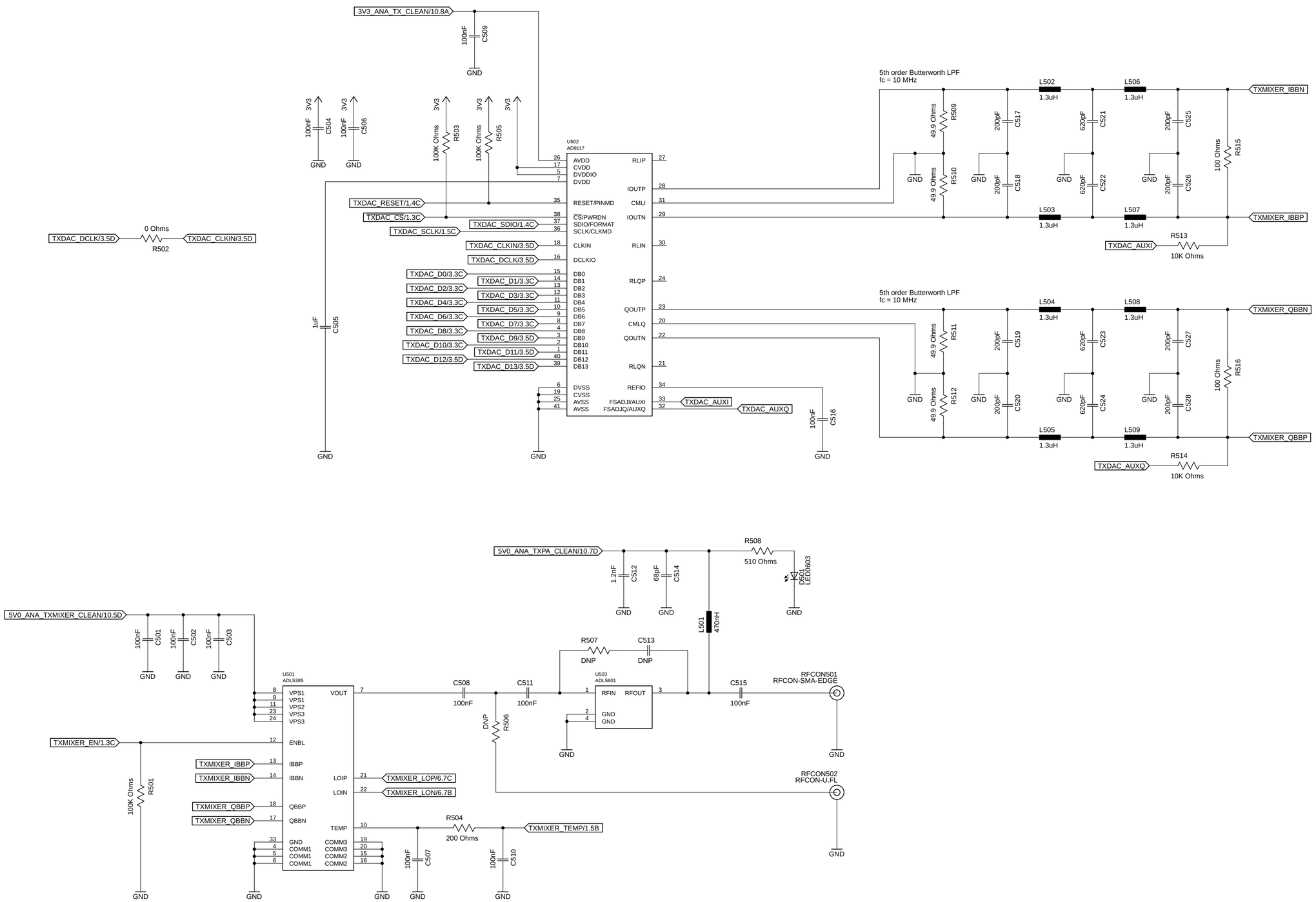

icyradio

10/10/19 01:02

Sheet: 5/10

Rev:

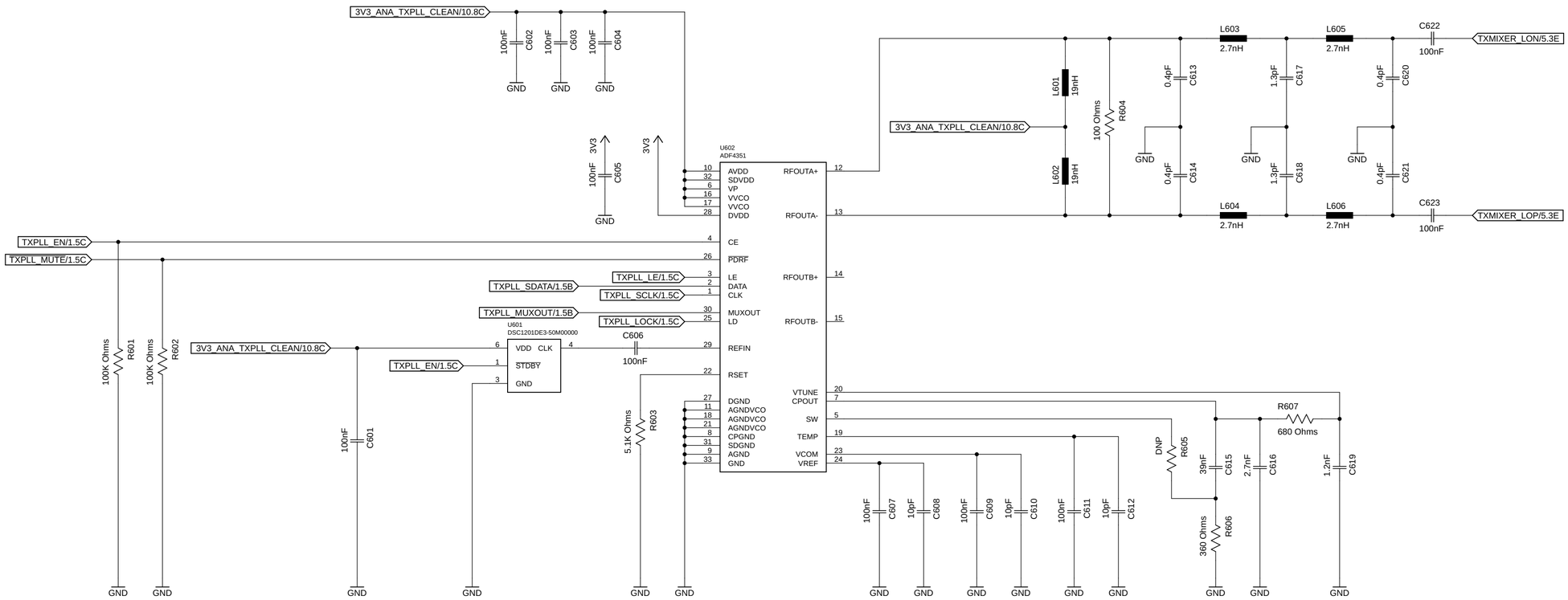

icyradio

10/10/19 01:02

Sheet: 6/10

Rev:

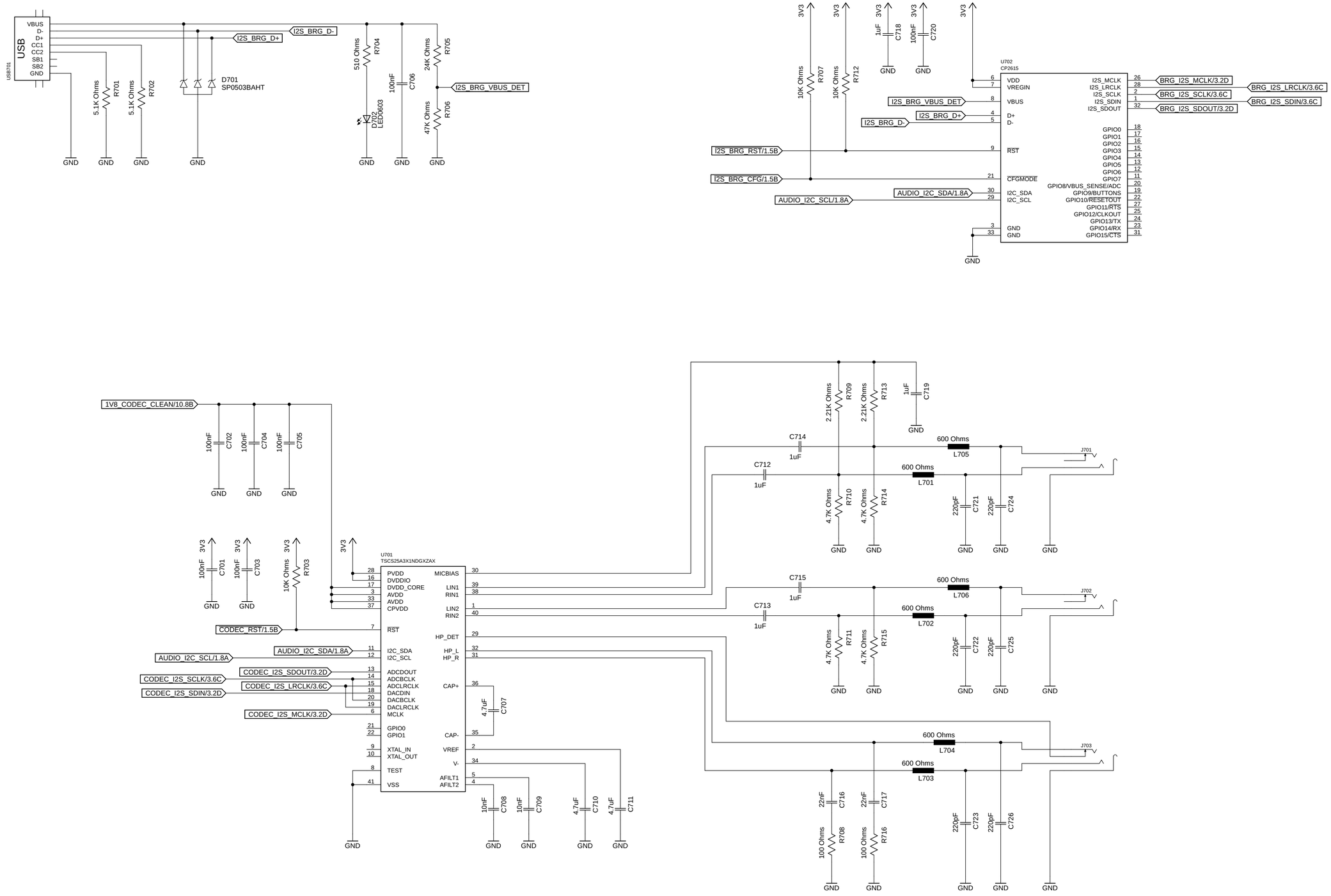

icyradio	
10/10/19 01:02	
Sheet: 7/10	Rev:

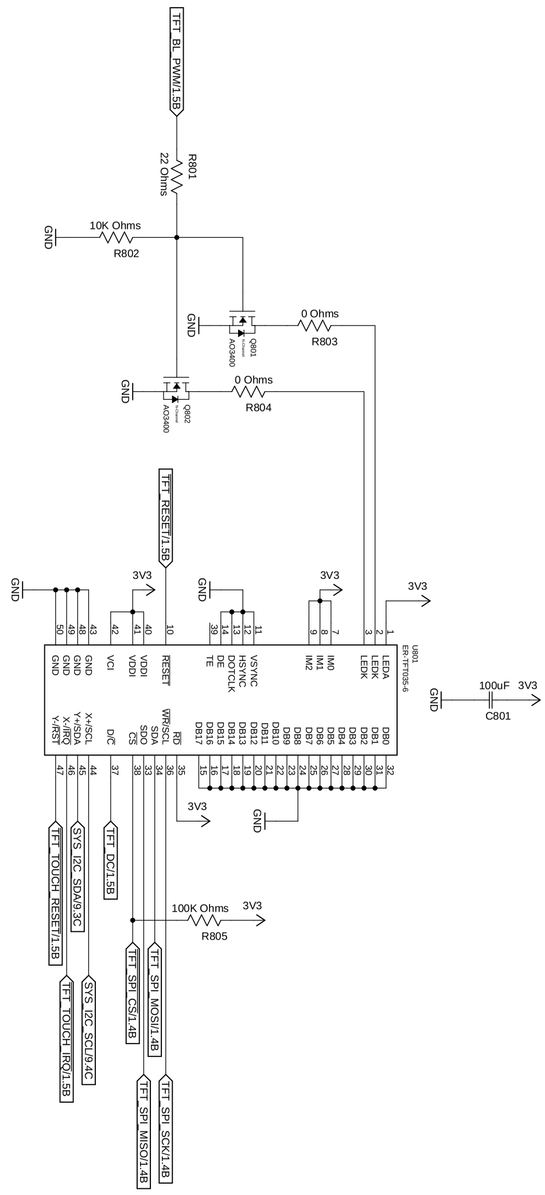

icyradio

10/10/19 01:02

Sheet: 8/10

Rev:

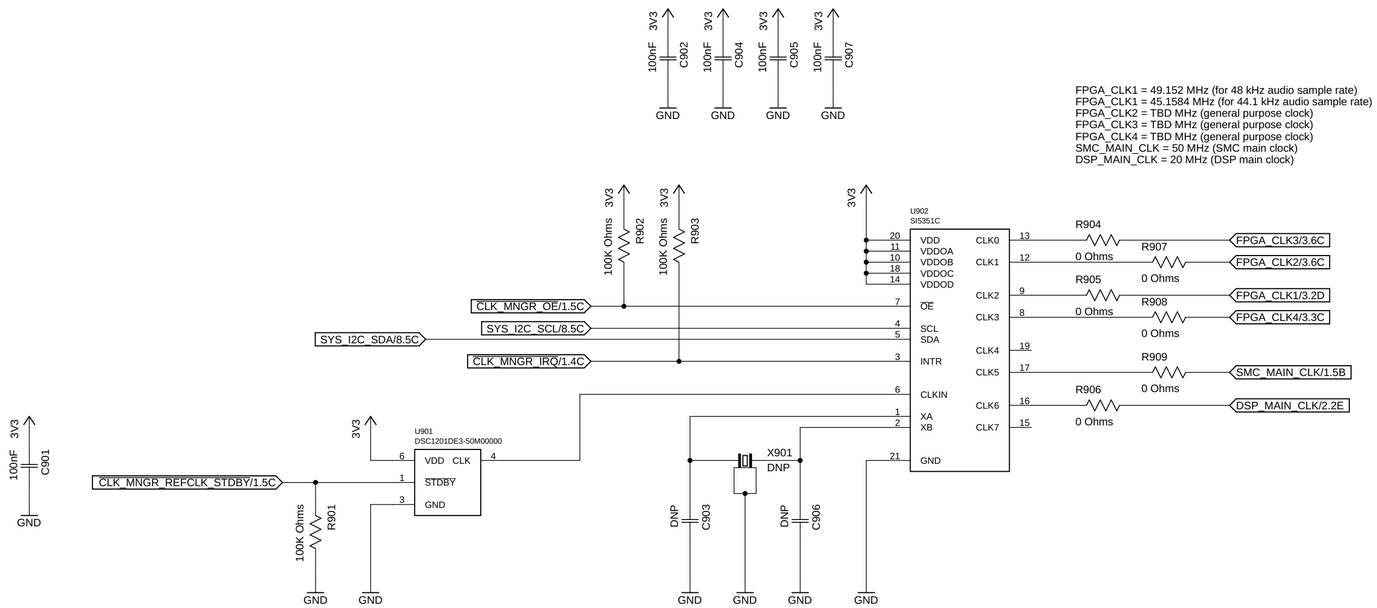

icyradio	
10/10/19 01:02	
Sheet: 9/10	Rev:

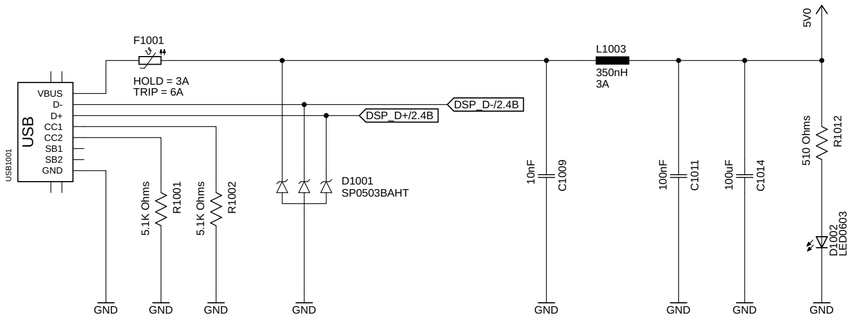

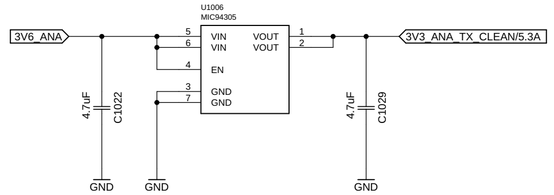

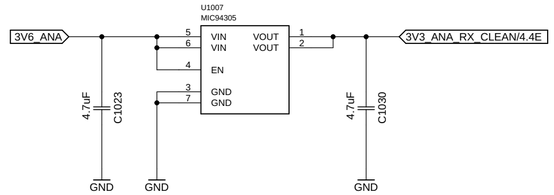

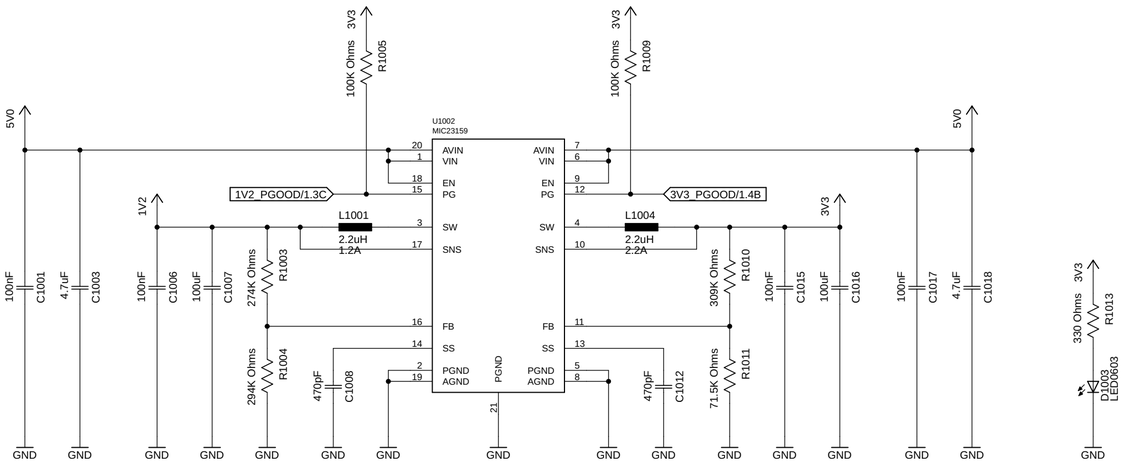

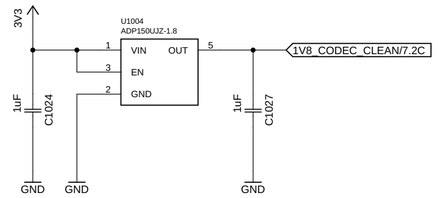

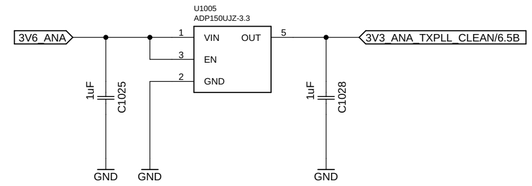

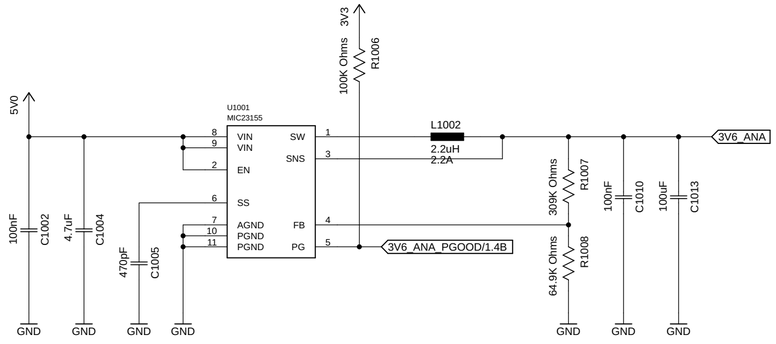

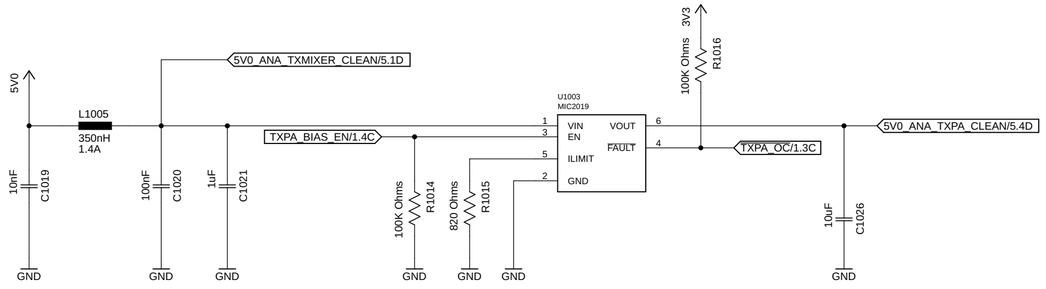

icyradio

10/10/19 01:02

Sheet: 10/10

Rev: