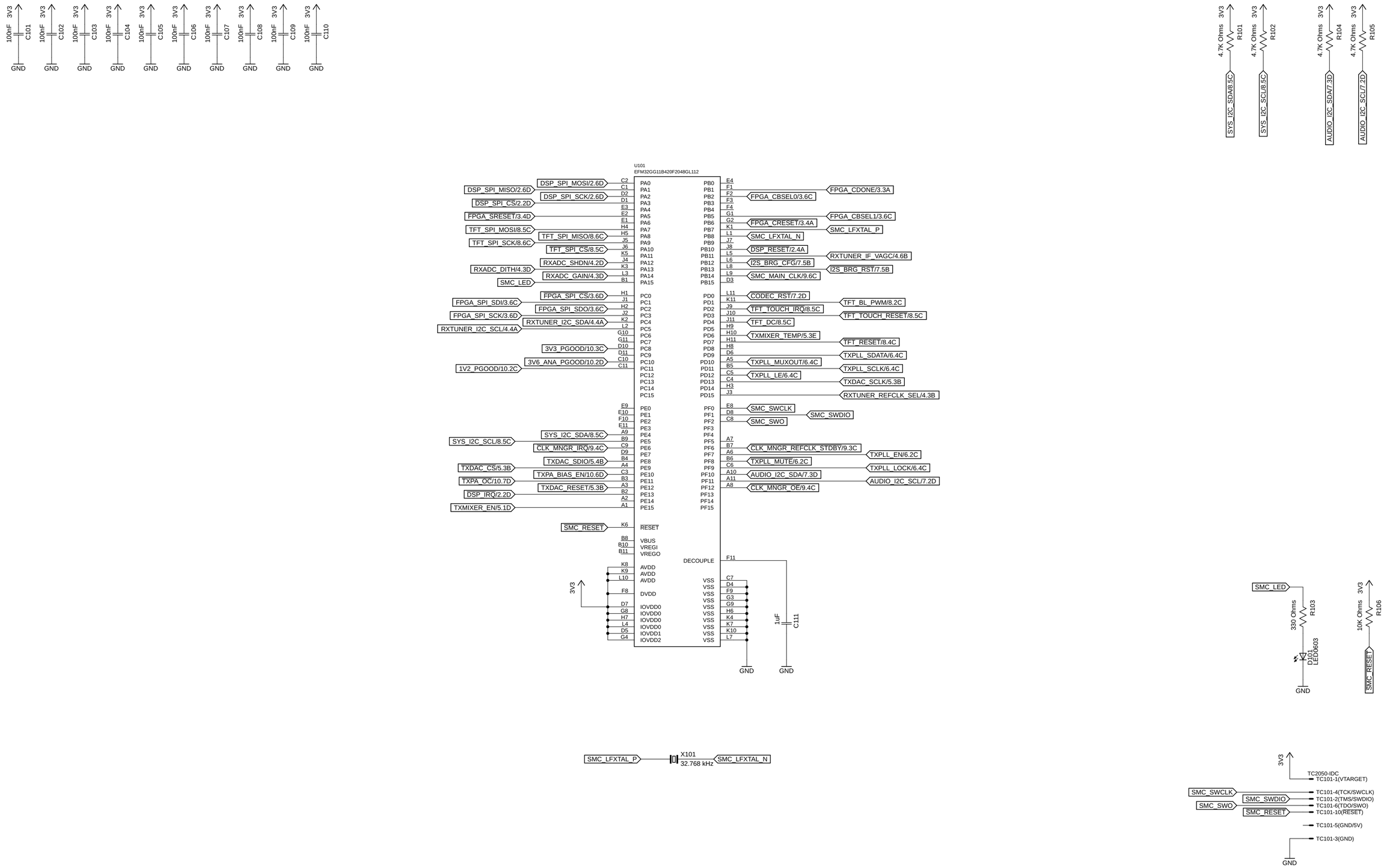

icyradio	
07/10/19 13:24	
Sheet: 1/10	Rev:

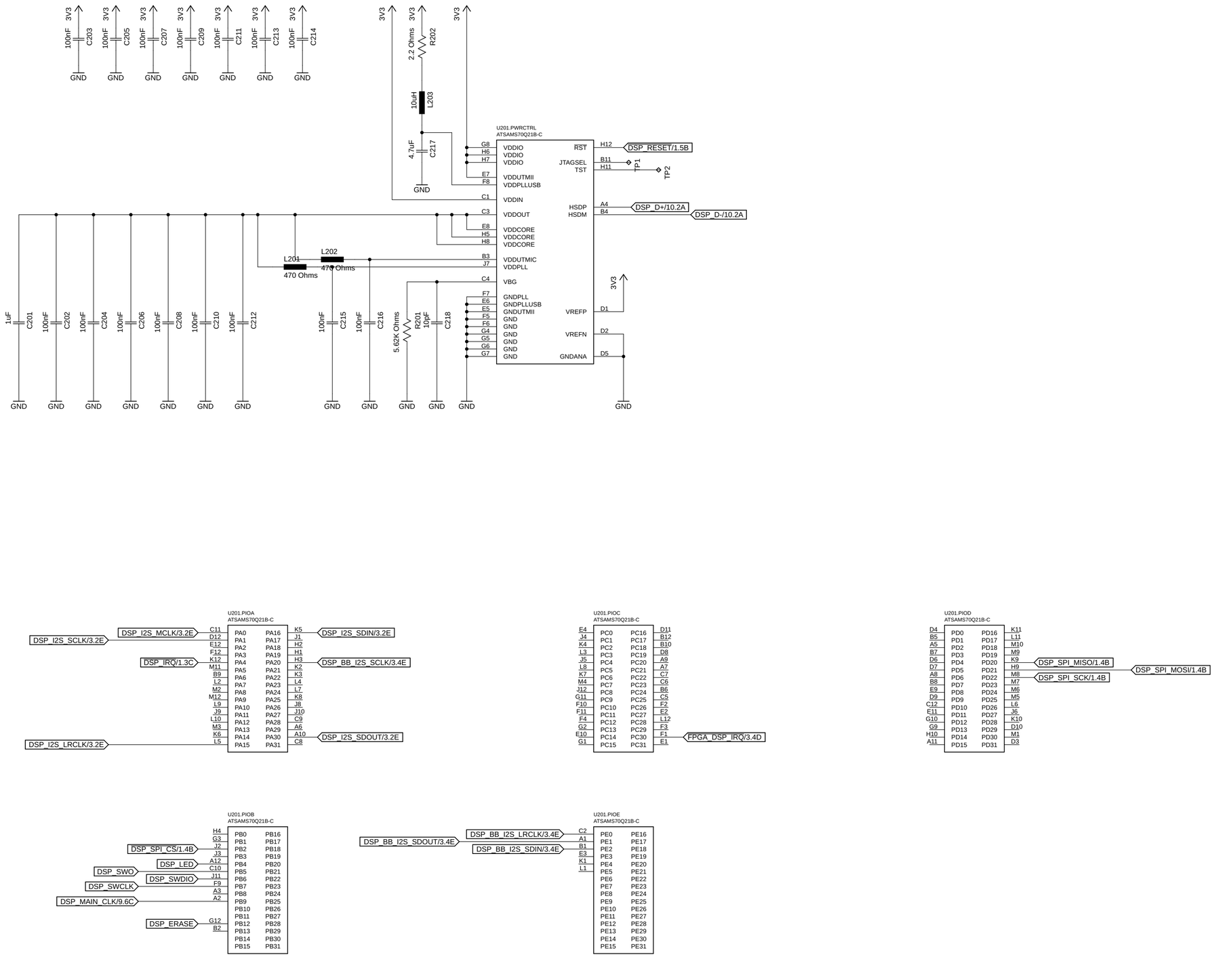

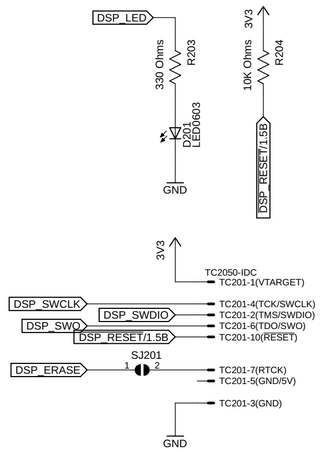

icyradio

07/10/19 13:24

Sheet: 2/10

Rev:

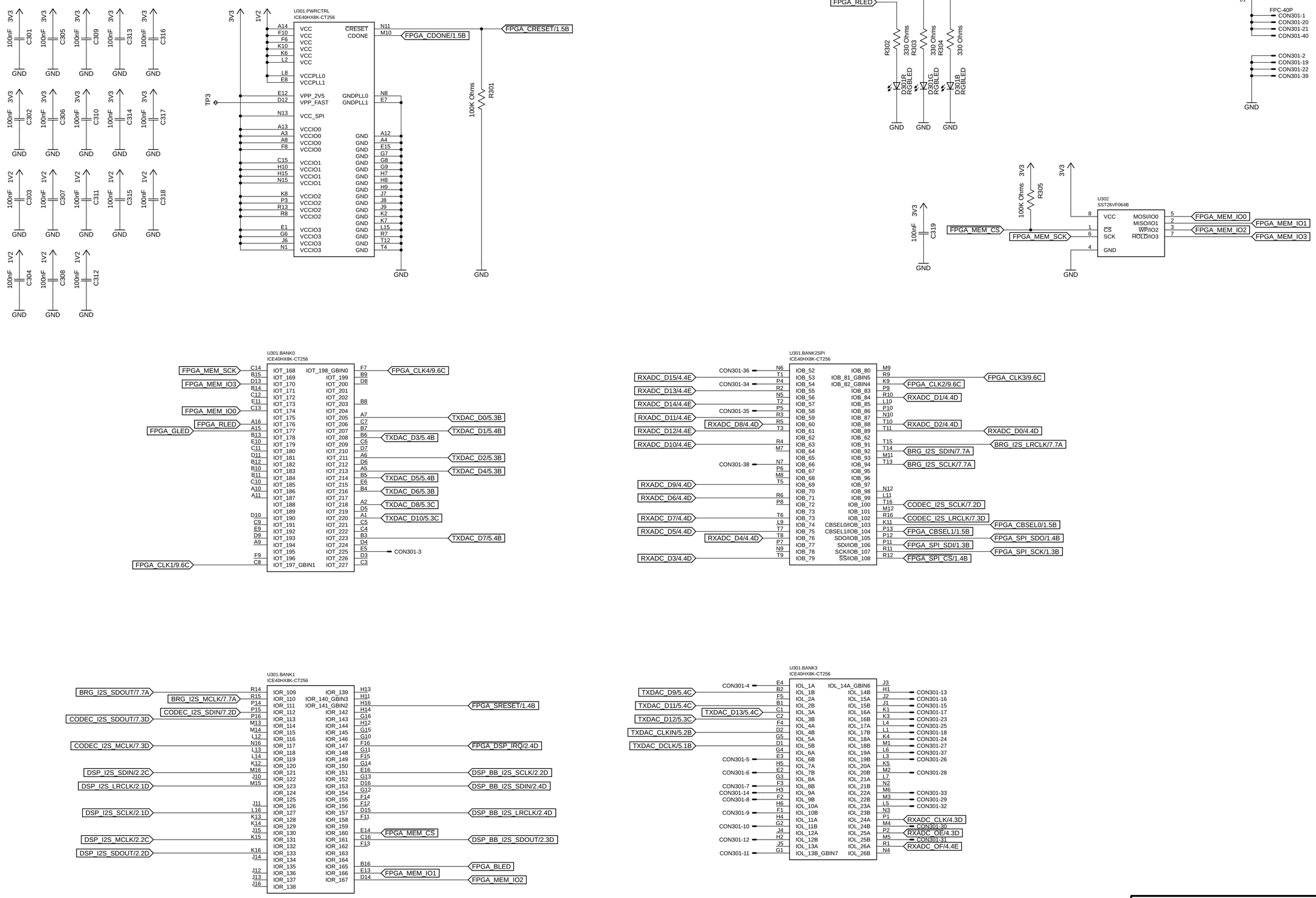

icyradio

07/10/19 13:24

Sheet: 3/10

Rev:

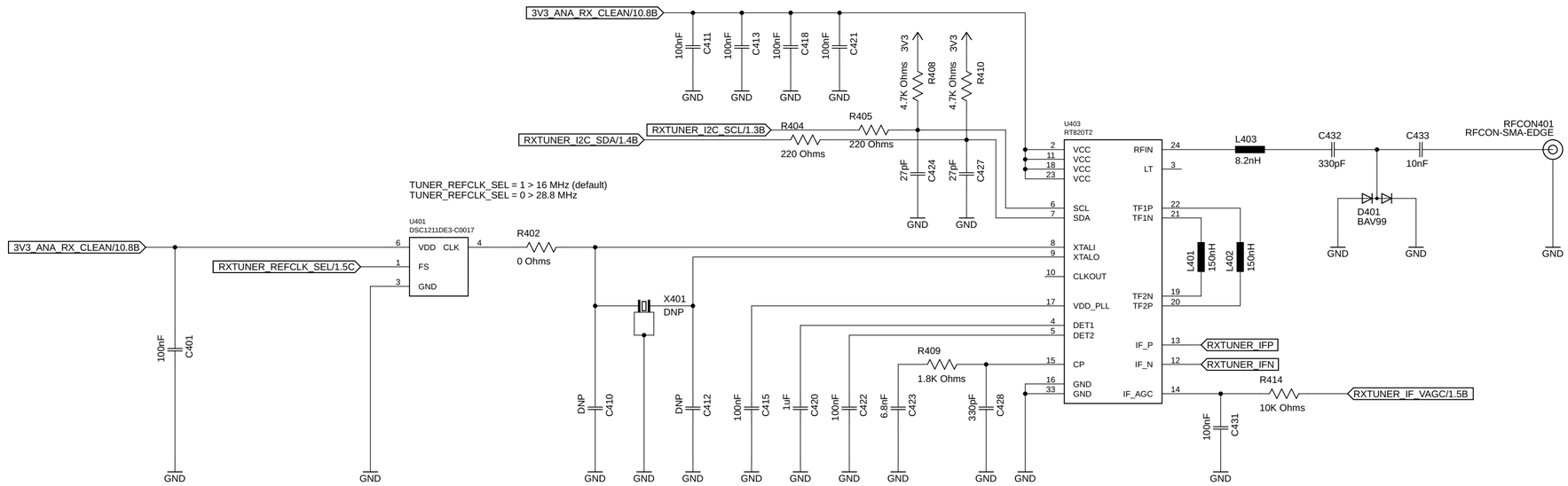

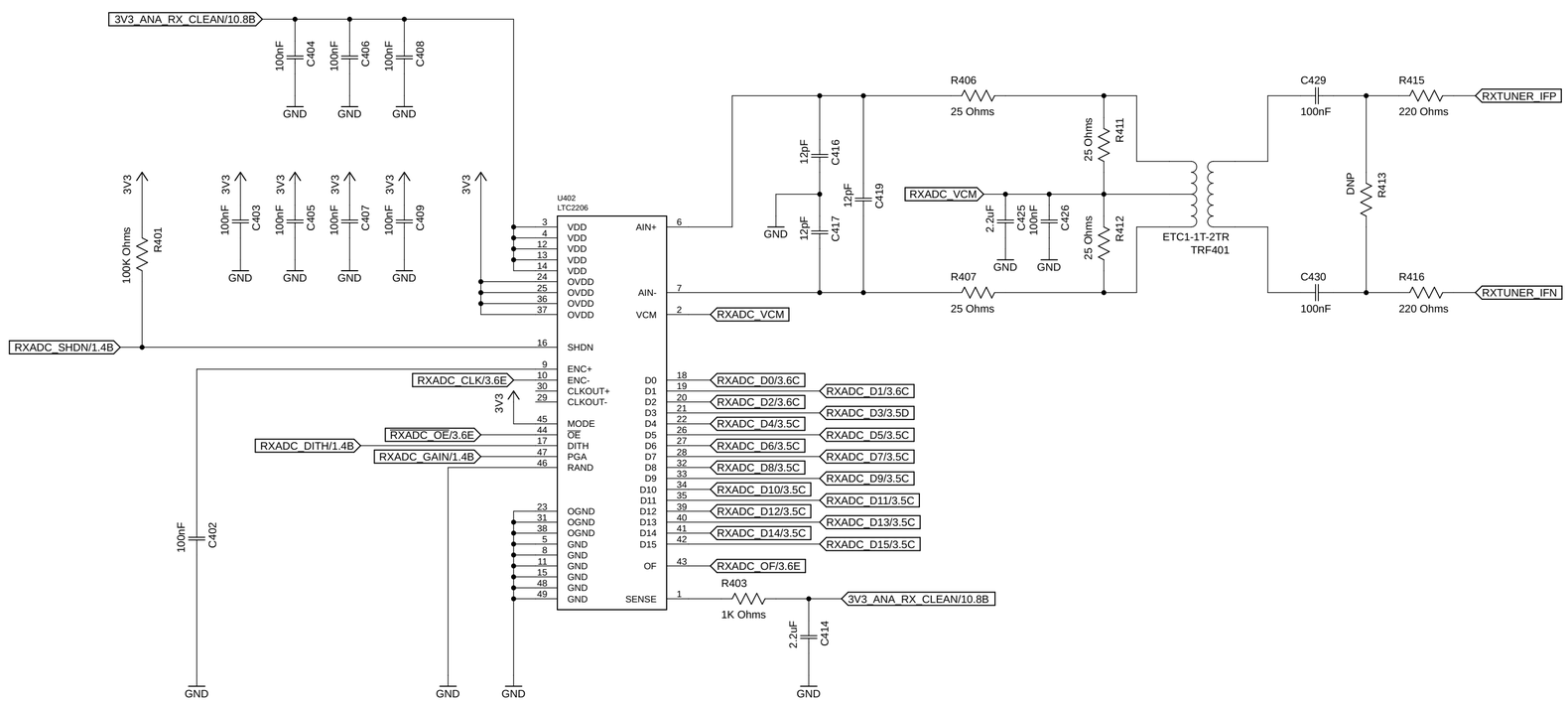

icyradio	
07/10/19 13:24	
Sheet: 4/10	Rev:

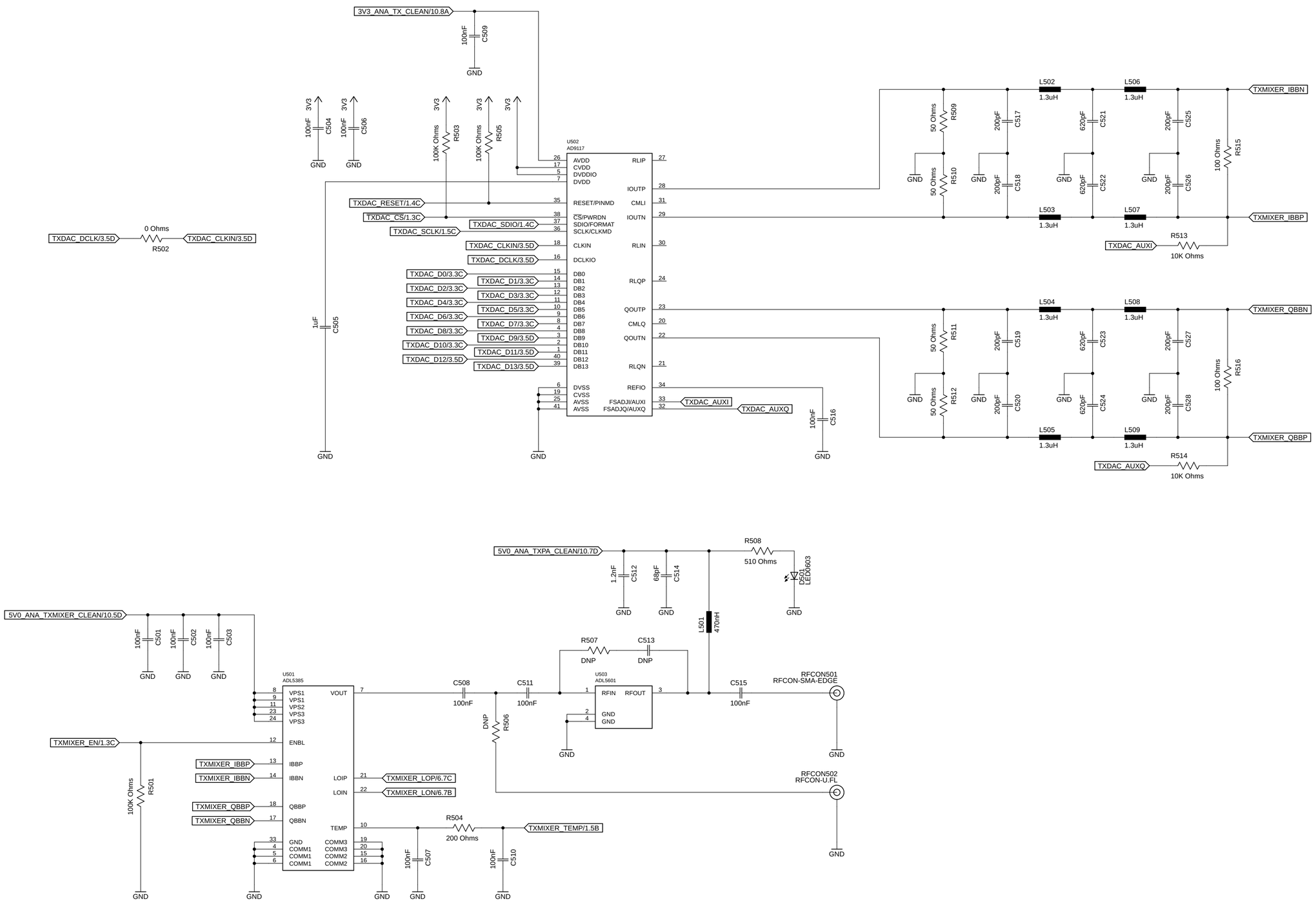

icyradio	
07/10/19 13:24	
Sheet: 5/10	Rev:

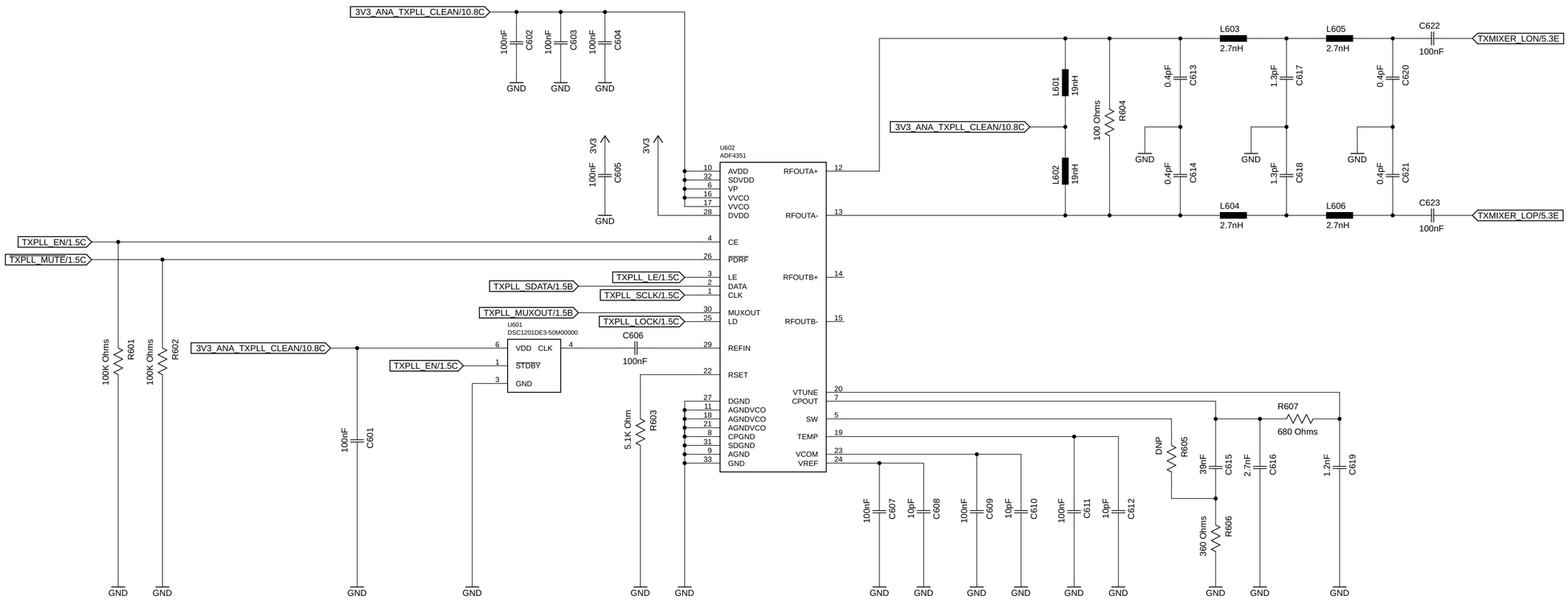

icyradio

07/10/19 13:24

Sheet: 6/10

Rev:

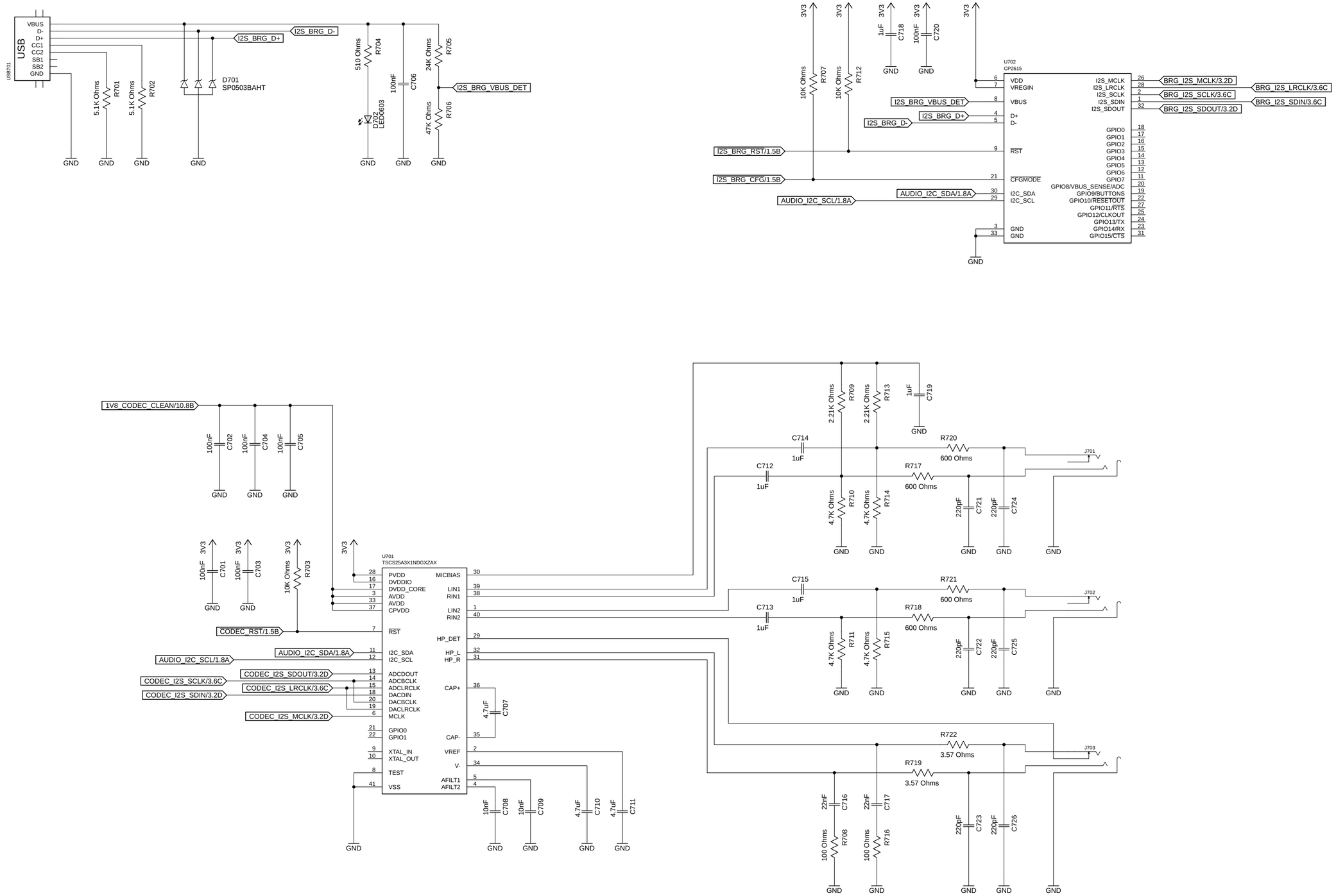

icyradio	
07/10/19 13:24	
Sheet: 7/10	Rev:

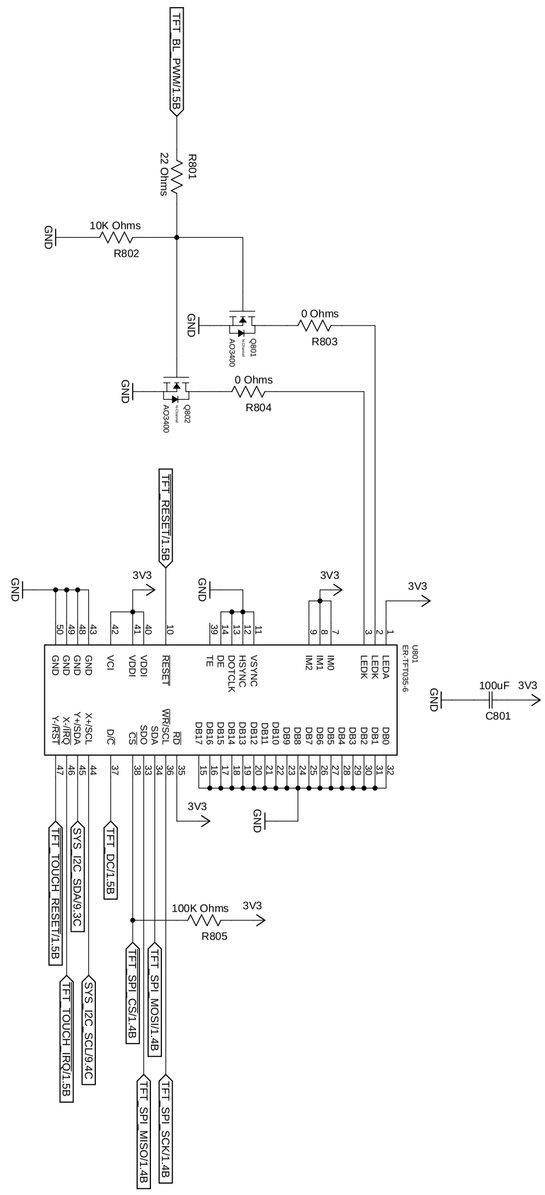

icyradio

07/10/19 13:24

Sheet: 8/10

Rev:

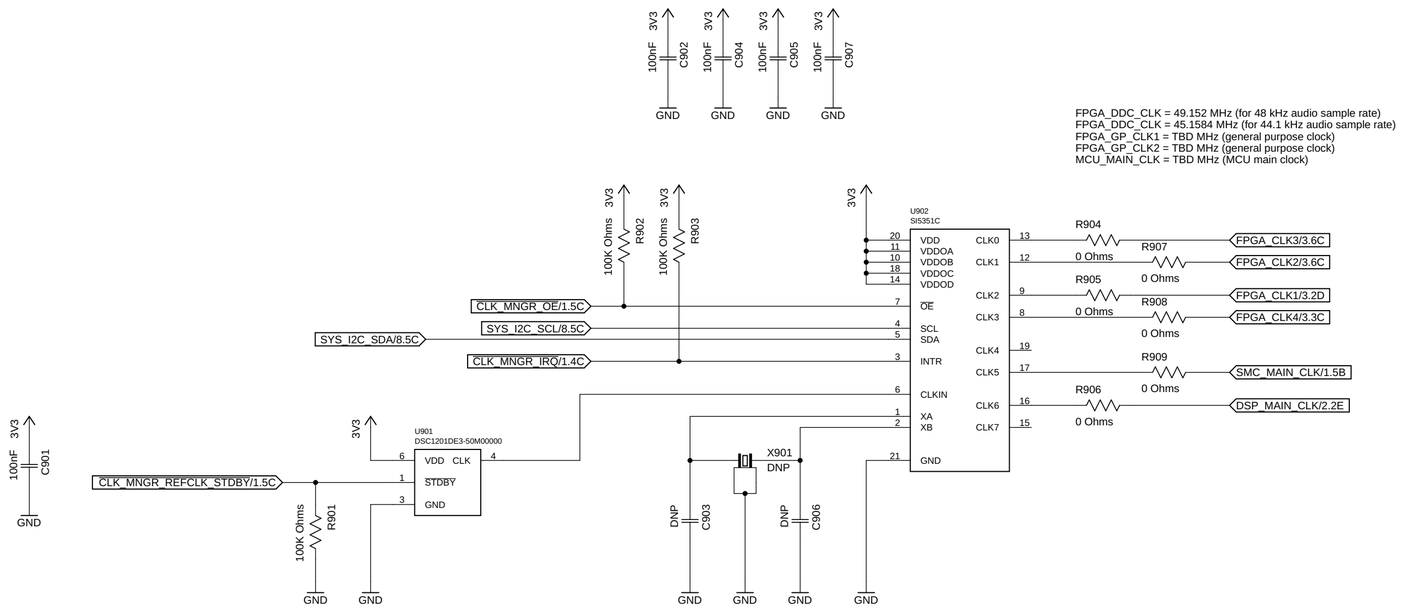

icyradio	
07/10/19 13:24	
Sheet: 9/10	Rev:

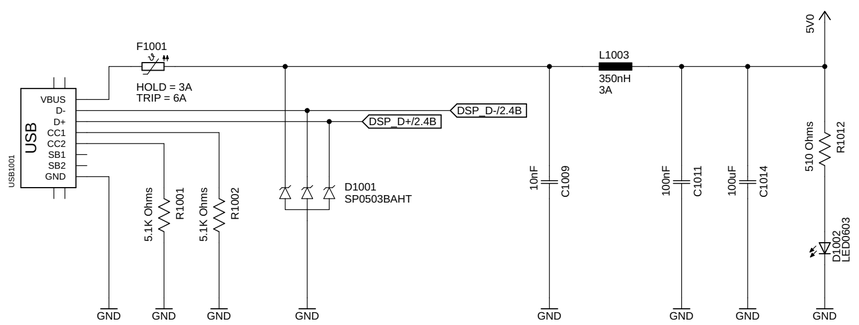

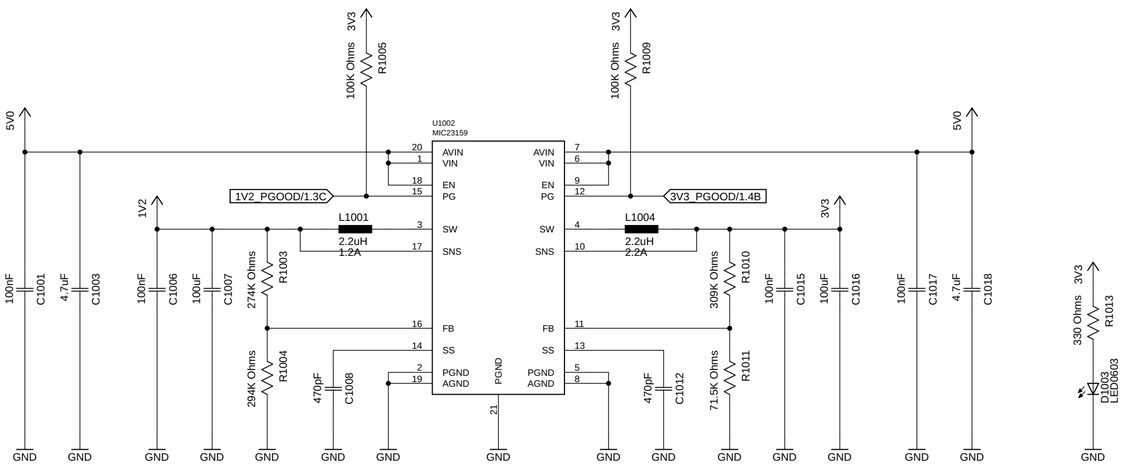

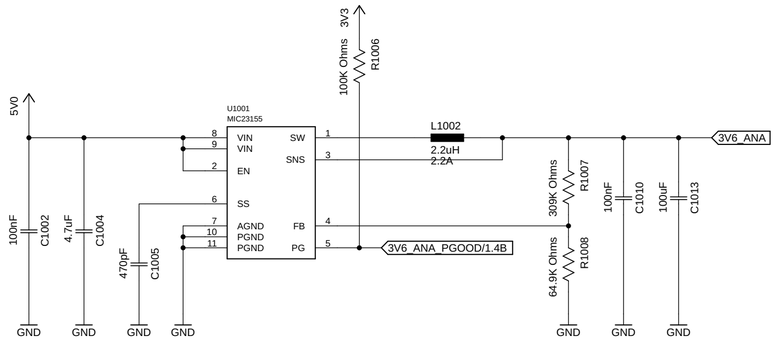

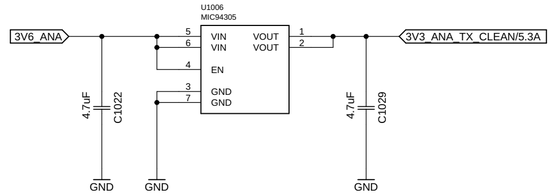

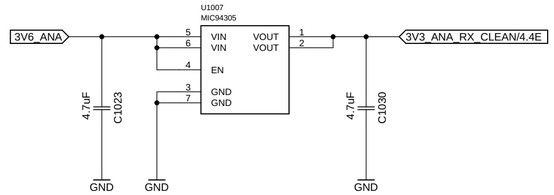

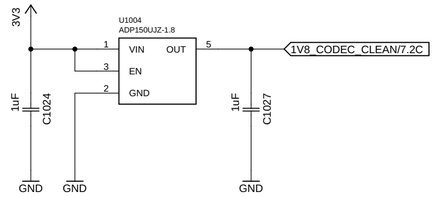

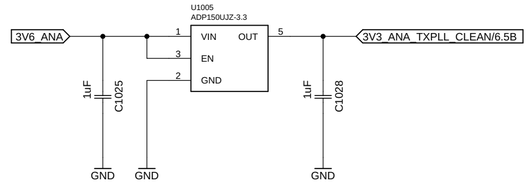

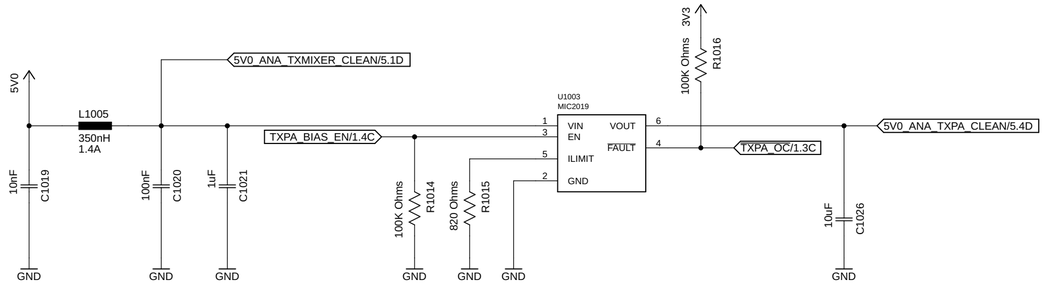

icyradio	
07/10/19 13:24	
Sheet: 10/10	Rev: