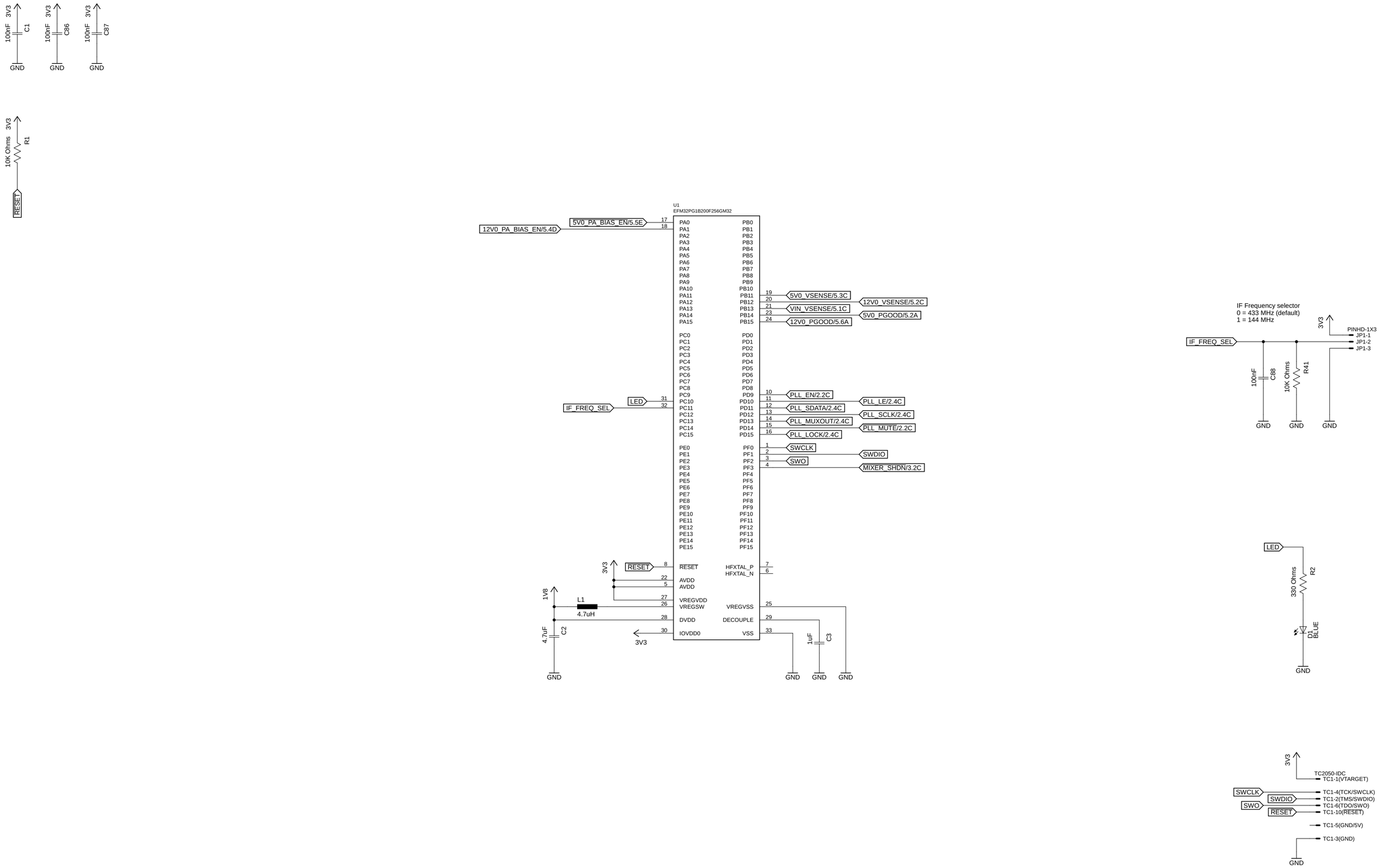

icyradio-upconverter	João Silva Logo
Joao Silva	
Sheet: 1/5	MCU
Date: 18/05/2020 01:36	Rev: 1

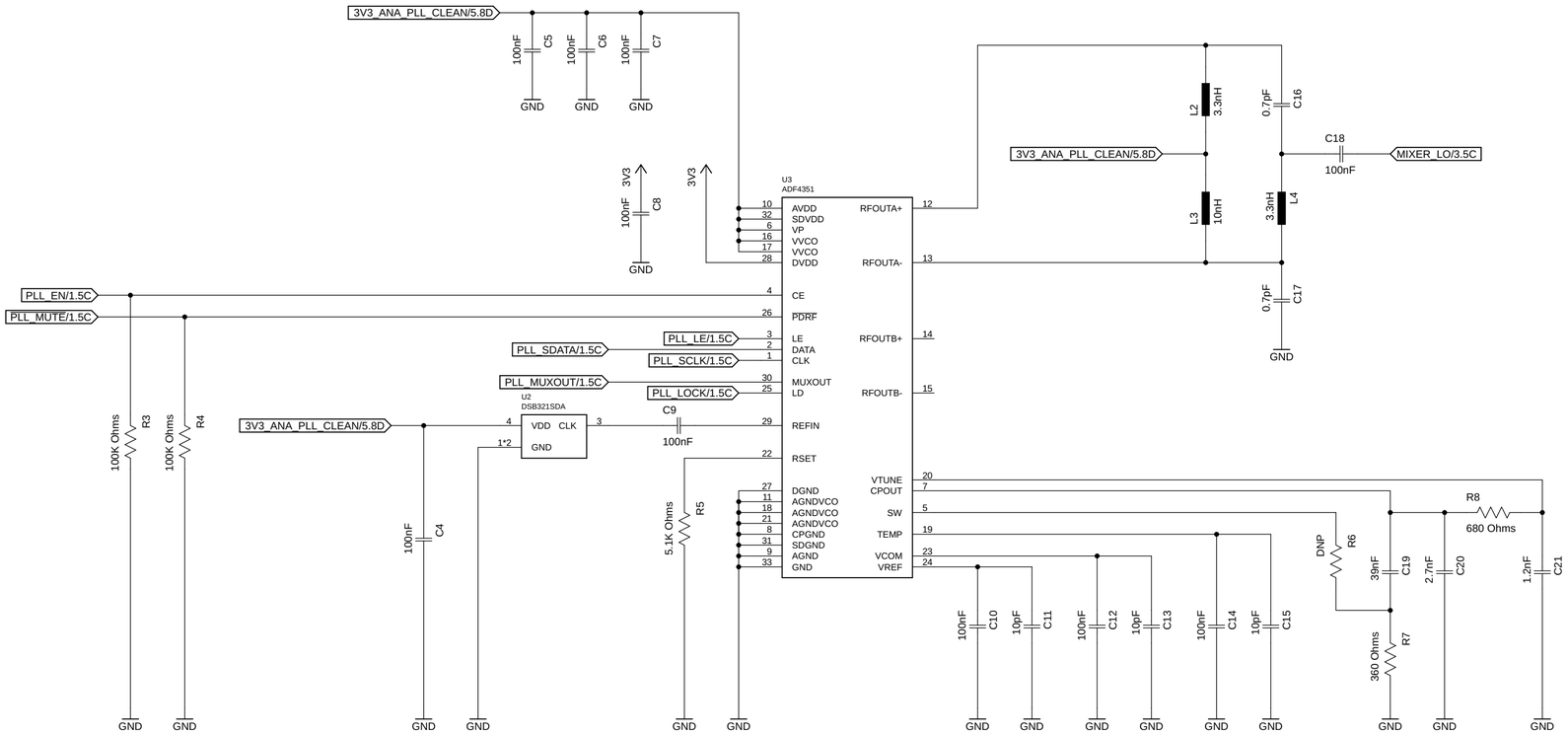

icyradio-upconverter	
Joao Silva	
Sheet: 2/5	LO Synthesizer
Date: 18/05/2020 01:36	Rev: 1

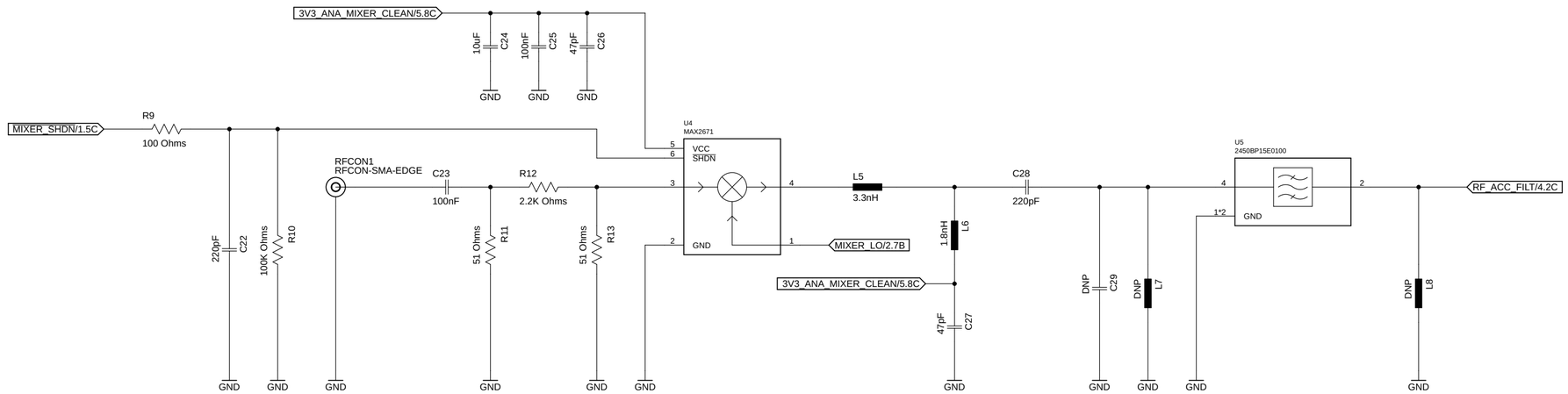

icyradio-upconverter

Joao Silva

Sheet: 3/5 | Mixer + Filter

Date: 18/05/2020 01:36 | Rev: 1

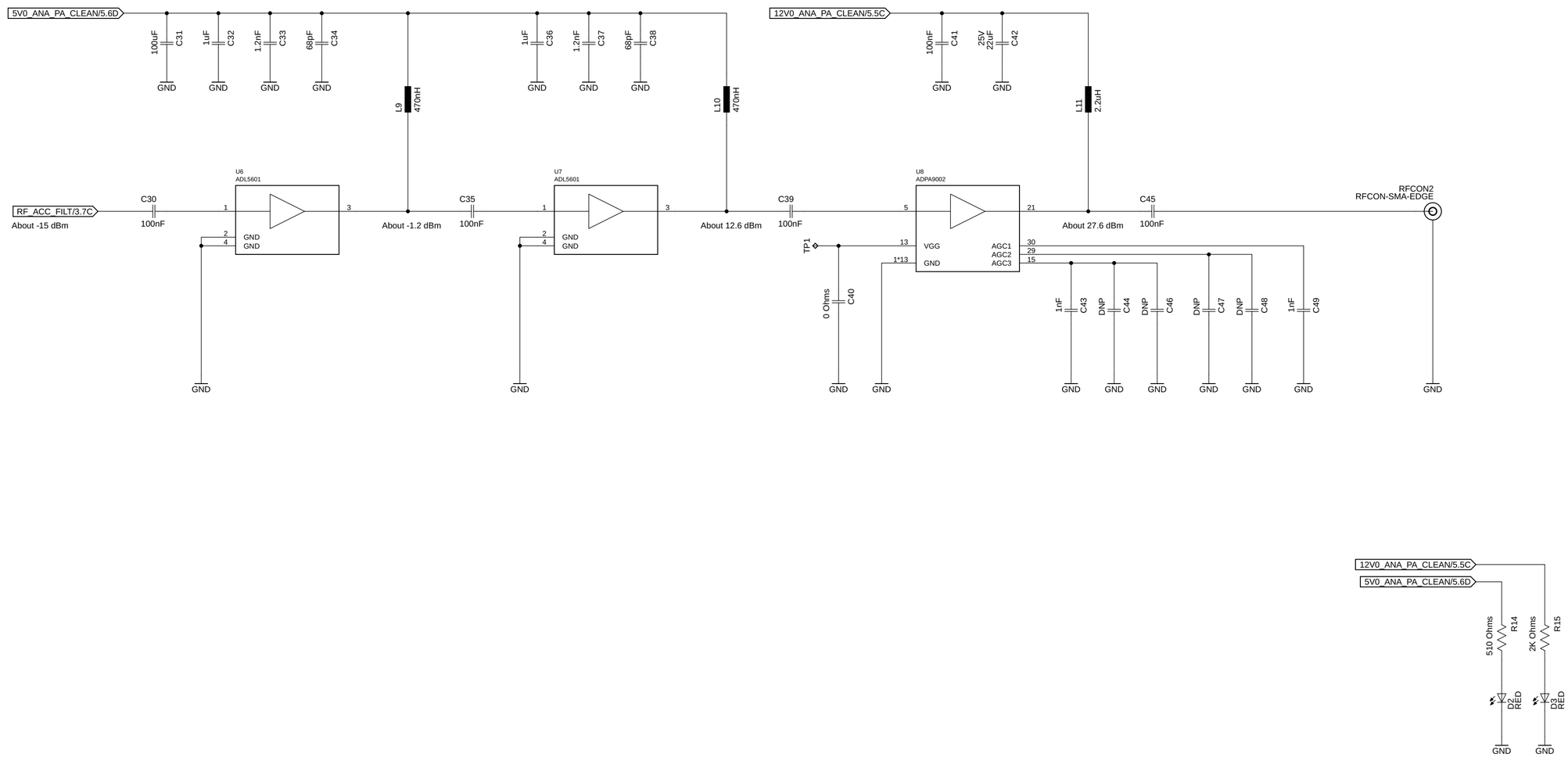

icyradio-upconverter	
Joao Silva	
Sheet: 4/5	Amplifiers
Date: 18/05/2020 01:36	Rev: 1

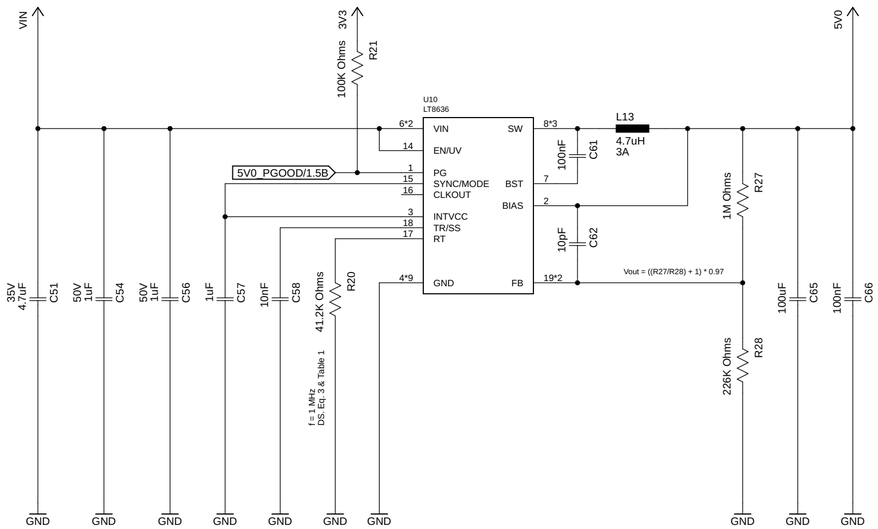

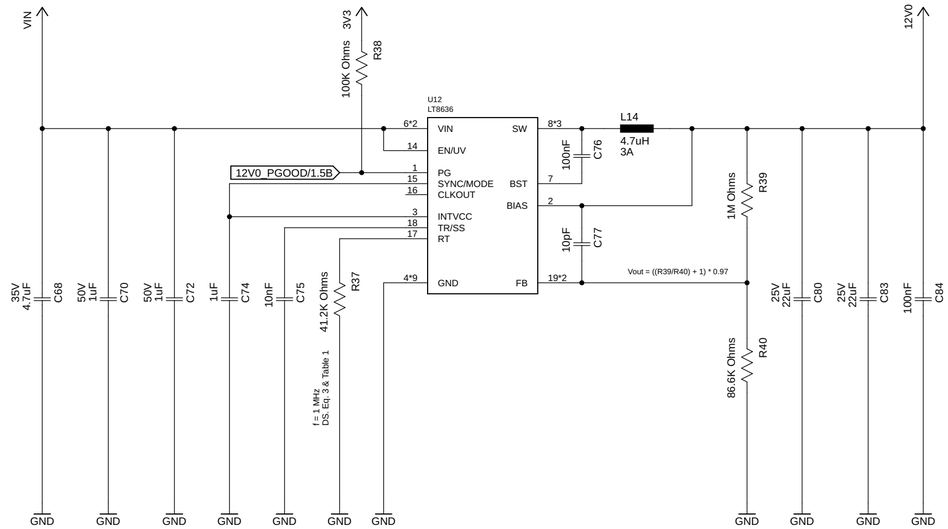

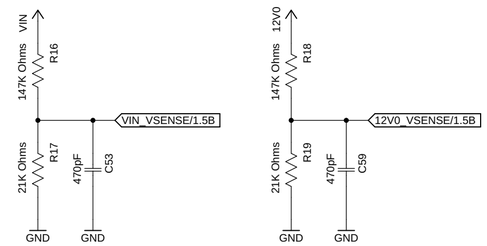

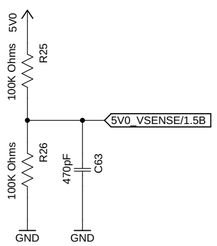

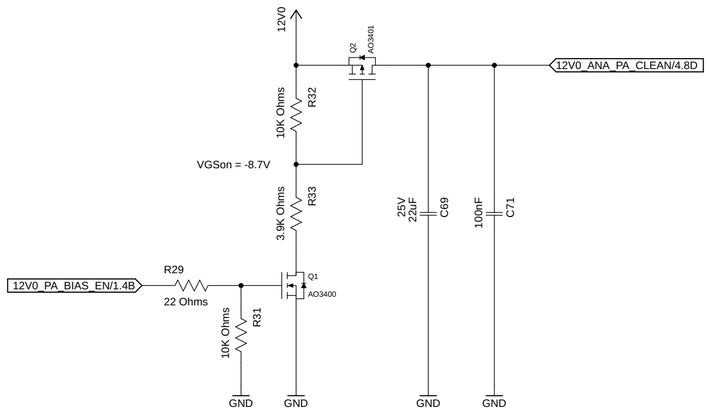

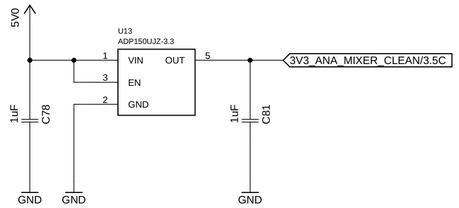

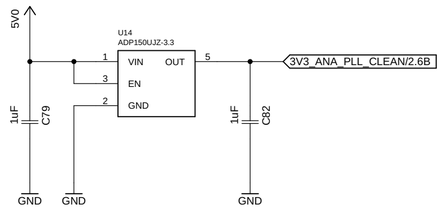

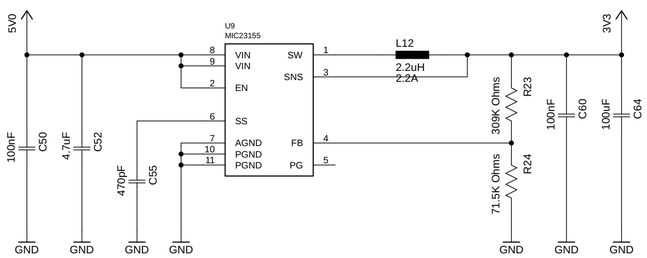

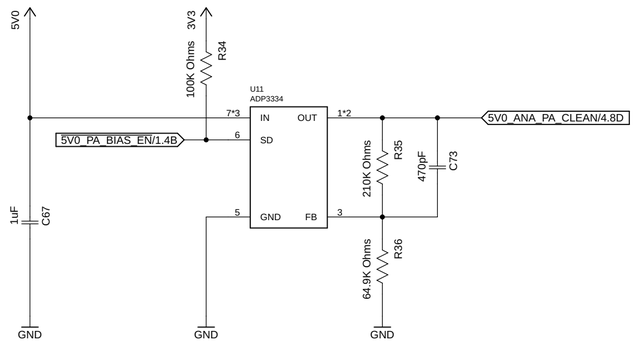

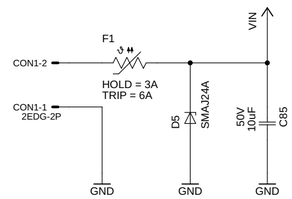

icyradio-upconverter	
Joao Silva	
Sheet: 5/5	Power
Date: 18/05/2020 01:36	Rev: 1