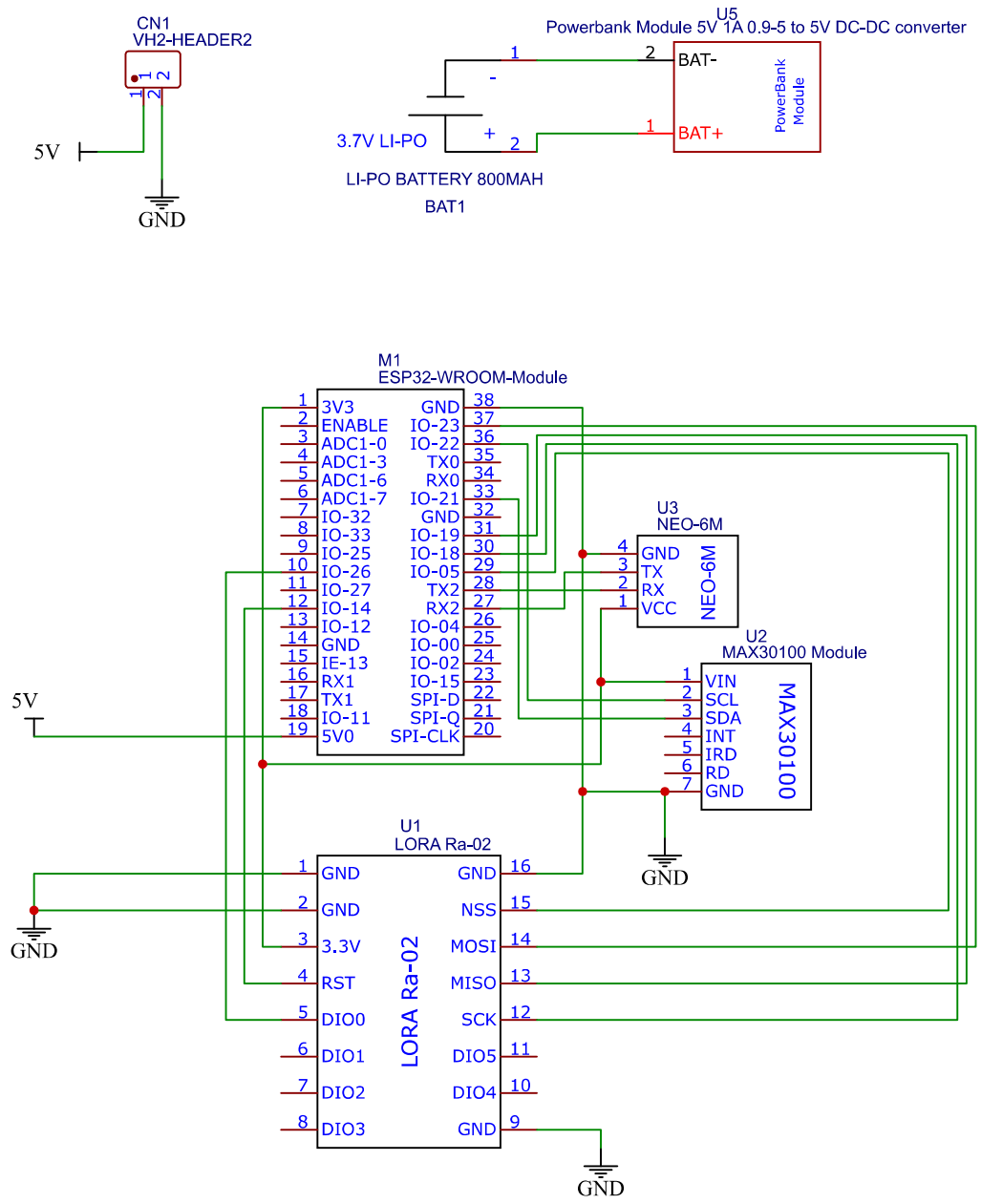

TITLE: Transmitter Circuit		REV: 1.0
EasyEDA	Company: EAT 2022 Batch - UOC	Sheet: 1/1
	Date: 2024-11-03 Drawn By: kanishka 22sea028	

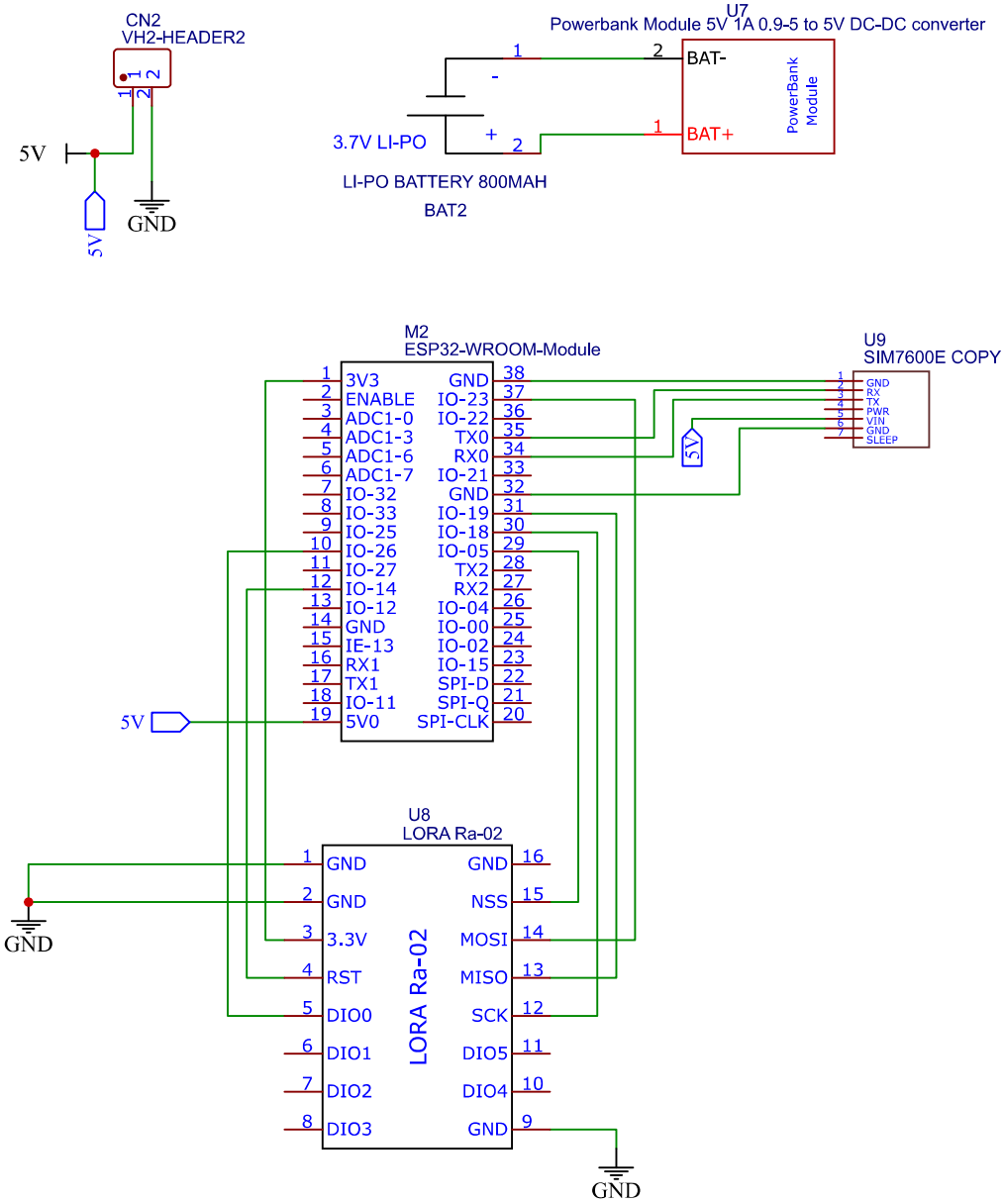

TITLE: Receiver Circuit		REV: 1.0
EasyEDA	Company: EAT 2022 Batch - UOC	Sheet: 1/1
	Date: 2024-11-12 Drawn By: kanishka 22sea028	