CIA 3 Report

Title: Smart Water Quality Monitoring and Contamination Prediction

Course Name: Introduction to Industrial Internet of Things

B. Tech Degree - 6BTCS AIML C

Adinath Praveen- 2362009
Adithya Shadevan - 2362012
Aleena Maria Shaji - 2362023
Alen Binu - 2362024

Github Link:

DEPARTMENT OF AI and DATA SCIENCE ENGINEERING

School of Engineering and Technology, CHRIST

(Deemed to be University), Kumbalagodu,

Bengaluru-560 074

February 2026

ABSTRACT

Water quality monitoring is essential to ensure safe and healthy water for domestic, industrial, and environmental purposes. Traditional water testing methods are often time-consuming and require manual sampling and laboratory analysis. To overcome these limitations, an IoT-Based Water Quality Monitoring System is developed to provide real-time monitoring and remote access to water quality parameters.

In this project, sensors are used to measure important parameters such as pH level and temperature of water. An ESP32 microcontroller is used as the main processing unit to collect data from the sensors. The measured values are displayed locally on an OLED display and simultaneously transmitted to the ThingSpeak cloud platform through Wi-Fi connectivity. This allows users to monitor water quality remotely through graphical visualization of sensor data.

The system continuously collects and uploads data at regular intervals, enabling efficient monitoring and early detection of abnormal water conditions. The proposed system is low-cost, reliable, and easy to implement, making it suitable for applications such as environmental monitoring, aquaculture, and water resource management.

Furthermore, the implementation of IoT technology allows continuous monitoring of water parameters without the need for frequent manual inspection. By storing the collected data on the cloud platform, users can analyze historical trends and identify variations in water quality over time. This capability helps in making informed decisions for maintaining safe water conditions and improving water resource management.

In addition, the system provides a scalable and flexible solution for future improvements. Additional sensors such as turbidity sensors, dissolved oxygen sensors, and conductivity sensors can be integrated to monitor more water quality parameters. With further enhancements, the system can contribute to the development of smart environmental monitoring systems that ensure sustainable water management and protection of aquatic ecosystems.

1. INTRODUCTION

Water is one of the most essential natural resources required for human survival, agriculture, and industrial activities. Maintaining good water quality is important for protecting human health, aquatic life, and the overall environment. However, due to rapid industrialization, urbanization, and environmental pollution, water sources are increasingly exposed to contamination. Therefore, continuous monitoring of water quality has become necessary to ensure that water remains safe for various uses.

Traditional water quality monitoring methods usually involve collecting water samples and analyzing them in laboratories. These methods are often time-consuming, costly, and do not provide real-time information about the condition of the water. As a result, sudden changes in water quality may not be detected immediately. To overcome these limitations, modern technologies such as the Internet of Things (IoT) are being used to develop automated and real-time monitoring systems.
The Internet of Things (IoT) enables devices and sensors to communicate with each other through the internet and share data in real time. By integrating sensors with microcontrollers and wireless communication modules, it is possible to continuously monitor environmental parameters and send the collected data to cloud platforms for remote access and analysis.

In this project, an IoT-Based Water Quality Monitoring System is developed using an ESP32 microcontroller, a pH sensor, and a DS18B20 temperature sensor. These sensors measure important water quality parameters such as acidity or alkalinity (pH) and temperature. The ESP32 processes the sensor data and displays the readings on an OLED display for local monitoring.

Additionally, the ESP32 uses its built-in Wi-Fi connectivity to transmit the collected data to the ThingSpeak cloud platform. ThingSpeak stores the data and displays it in graphical form, allowing users to monitor water quality remotely. This system provides a low-cost, efficient, and reliable solution for real-time water quality monitoring and can be applied in areas such as environmental monitoring, aquaculture, and water resource management.

2. SELECTED RESEARCH PAPER OVERVIEW

Recent research studies focus on developing **IoT-based water quality monitoring systems** to overcome the limitations of traditional water testing methods. These systems use various sensors and wireless communication technologies to continuously monitor water parameters and transmit the collected data to cloud platforms. This approach enables real-time monitoring and helps in identifying water contamination at an early stage.

Many research papers propose systems that use sensors such as **pH sensors, temperature sensors, turbidity sensors, and dissolved oxygen sensors** to measure different water quality parameters. The sensor data is processed using microcontrollers such as Arduino or ESP32 and transmitted through Wi-Fi or other communication technologies. The data is then stored and visualized on cloud platforms, allowing users to analyze water conditions remotely through graphs and dashboards.

Inspired by these research studies, the proposed project implements an **IoT-Based Water Quality Monitoring System** using an **ESP32 microcontroller, pH sensor, and temperature sensor**. The collected sensor data is displayed on an **OLED display** for local monitoring and uploaded to the **ThingSpeak cloud platform** for remote access. This approach demonstrates a simple, low-cost, and efficient method for monitoring water quality using IoT technology.

2.1 Research Paper Details

The selected research paper discusses the development of an IoT based water quality monitoring system that enables real time monitoring of important water parameters using sensors and wireless communication. The system uses sensors such as pH, temperature, turbidity, and dissolved oxygen sensors to measure the quality of water continuously. A microcontroller is used to collect the sensor data and transmit it to a cloud platform through internet connectivity. The data stored in the cloud can be visualized using graphs and dashboards, allowing users to monitor water conditions remotely. The research highlights that IoT technology provides a cost effective and efficient solution for continuous water quality monitoring in applications such as environmental monitoring, aquaculture, and drinking water management.

.

2.2 Objective of the Research Paper

The primary objective of the research paper is to develop an efficient system for monitoring water quality using Internet of Things (IoT) technology. The study aims to measure important water parameters continuously using sensors and transmit the collected data to a cloud platform. This helps in providing real time information about the condition of water.

Another objective of the research is to overcome the limitations of traditional water quality monitoring methods, which require manual sampling and laboratory testing. By using sensors and wireless communication, the system can automatically collect and transmit data, reducing the time and effort required for monitoring. This approach allows users to observe water conditions remotely through internet connected devices.

The research also aims to create a low cost and reliable monitoring system that can be used in different applications such as environmental monitoring, aquaculture, and drinking water management. Continuous monitoring helps in detecting abnormal changes in water parameters early and supports better decision making for maintaining safe and sustainable water resources.

2.3 Methodology Used in the Paper

The methodology described in the research paper involves the use of sensors and IoT technology to monitor water quality parameters in real time. Various sensors are used to measure important parameters such as pH, temperature, turbidity, and dissolved oxygen. These sensors are connected to a microcontroller that collects the sensor readings and processes the data. The microcontroller acts as the central unit that manages the data acquisition from all the sensors and ensures proper communication between the hardware components.

After collecting the sensor data, the microcontroller transmits the information to a cloud platform using wireless communication such as Wi-Fi. The cloud platform stores the data and displays it in the form of graphs and charts so that users can easily monitor water conditions remotely. This approach allows continuous monitoring and helps in identifying changes in water quality over time, making it easier to detect contamination or abnormal conditions at an early stage.

2.4 Outcomes of the Research Paper

The research paper demonstrates that the use of IoT technology can significantly improve the efficiency of water quality monitoring systems. By integrating sensors with a microcontroller and cloud platform, the system is able to continuously measure important water parameters and transmit the collected data for remote monitoring. This approach provides real time information about water conditions and reduces the need for manual testing.

Another outcome of the research is the successful implementation of a system that can monitor multiple water quality parameters simultaneously. The use of sensors such as pH, temperature, turbidity, and dissolved oxygen allows a more comprehensive analysis of water quality. The system is capable of collecting accurate sensor readings and sending them to a cloud platform for visualization and analysis.

The research also shows that IoT based monitoring systems are cost effective and easy to deploy compared to traditional laboratory testing methods. Since the data is transmitted automatically through the internet, users can access water quality information from any location. This improves the efficiency of monitoring and helps authorities and researchers make faster decisions regarding water management.

Finally, the study highlights that continuous monitoring helps in detecting abnormal changes in water parameters at an early stage. Early detection of contamination or pollution allows timely action to be taken to prevent environmental damage and protect public health. Therefore, the proposed IoT based system provides a practical and reliable solution for modern water quality monitoring applications.

3. ANALYSIS OF RESEARCH PAPER

The research paper presents a detailed study on the use of IoT technology for monitoring water quality parameters. It explains how sensors can be integrated with microcontrollers to collect environmental data and transmit it to cloud platforms for remote monitoring. The paper highlights the importance of continuous monitoring to ensure safe water conditions and reduce the limitations of traditional manual testing methods.

The analysis of the research shows that using sensors such as pH, temperature, turbidity, and dissolved oxygen provides a comprehensive understanding of water quality. These parameters help in determining whether the water is suitable for drinking, agriculture, or industrial use. The use of wireless communication and cloud storage allows the collected data to be visualized through graphs and dashboards, making it easier for users to interpret the results.

Another important aspect identified in the research is the efficiency and cost effectiveness of IoT based monitoring systems. Compared to conventional laboratory testing, IoT systems provide faster data collection and real time monitoring. This reduces human effort and allows users to detect changes in water quality immediately. The ability to monitor water remotely also improves accessibility and convenience.

Overall, the research paper demonstrates that IoT based water quality monitoring systems are reliable and effective for environmental monitoring applications. The integration of sensors, microcontrollers, and cloud platforms creates a smart monitoring system that can help in early detection of pollution and better management of water resources. The findings of the research support the development of practical IoT solutions for maintaining water quality.

4. REDESIGNED SYSTEM DESCRIPTION

4.1 Objective of the Redesigned System

• Develop an efficient IoT-based system to monitor water quality in real time.
• Measure important water parameters such as pH level and temperature using sensors connected to ESP32 microcontroller.
• Provide continuous monitoring of water conditions to detect abnormal changes.
• Display water quality parameters locally using an OLED display.
• Send sensor data to the cloud platform ThingSpeak for remote monitoring and data visualization.
• Store and analyze water quality data over time using the cloud platform.
• Generate alerts when water parameters move beyond the safe range.
• Enable users to monitor water quality remotely through internet-connected devices.
• Reduce the need for manual water testing and laboratory analysis.
• Support environmental monitoring and smart water management systems.

4.2 Block Diagram & Description

The redesigned system consists of a pH sensor and a temperature sensor interfaced with a microcontroller that acts as the central processing unit. In this project, the microcontroller used is the ESP32, which enables both sensor data processing and wireless communication. The pH sensor is used to measure the acidity or alkalinity of the water, while the DS18B20 temperature sensor measures the temperature of the water sample. The system also includes an OLED display to show the measured values locally.

The operational flow is as follows:

• The pH sensor is placed in the water sample to measure the hydrogen ion concentration of the water.

• The sensor produces an analog voltage signal corresponding to the pH level of the water.

• The ESP32 reads the analog signal from the pH sensor and converts it into a pH value using a predefined formula.

• The DS18B20 temperature sensor measures the temperature of the water and sends the digital data to the ESP32 using the OneWire communication protocol.

• The ESP32 processes both the pH and temperature values and determines the current water condition.

• The measured pH and temperature values are displayed on an OLED display for real-time local monitoring.

• The processed sensor data is transmitted through Wi-Fi to the cloud platform ThingSpeak for remote monitoring and data visualization.

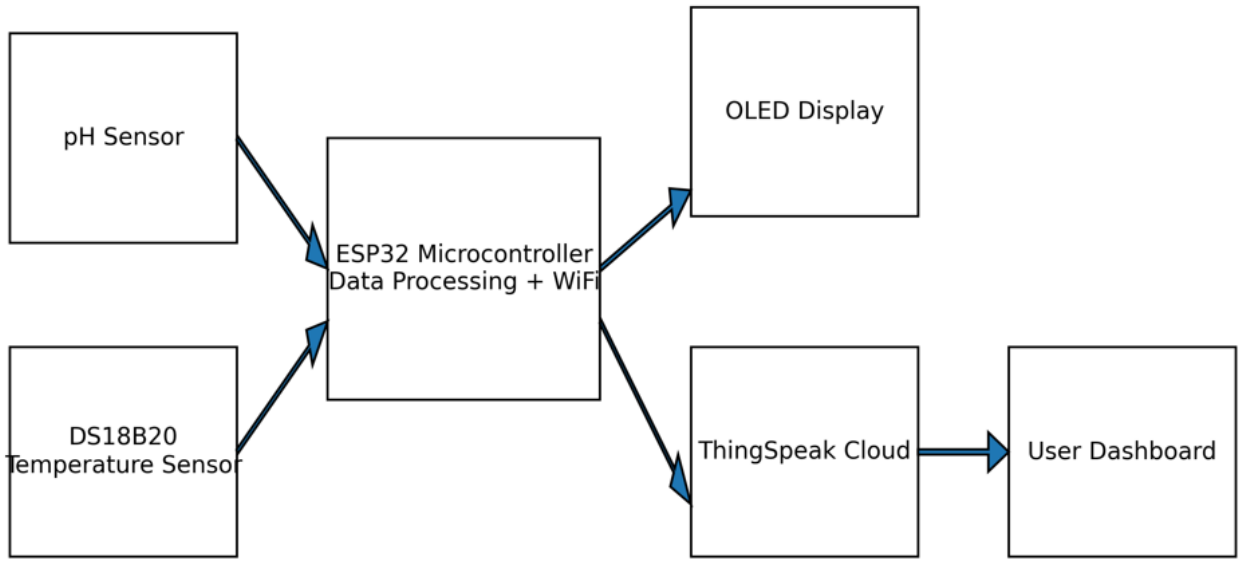

4.3 Hardware / Component Selection

• ESP32 Microcontroller

The ESP32 microcontroller acts as the main processing unit of the system. It reads data from the connected sensors, processes the information, and manages communication with other components. The ESP32 also has built-in Wi-Fi capability, which allows it to transmit sensor data to the cloud platform for remote monitoring.

• pH Sensor

The pH sensor is used to measure the acidity or alkalinity of the water. It detects the hydrogen ion concentration present in the water and produces an analog voltage signal corresponding to the pH value. This signal is read by the ESP32 and converted into an actual pH value to determine the water condition.

• DS18B20 Temperature Sensor

The DS18B20 sensor is used to measure the temperature of the water. It is a digital temperature sensor that communicates with the ESP32 using the OneWire protocol. The sensor provides accurate temperature readings, which are important for understanding environmental conditions that may affect water quality.

• **OLED Display (SSD1306)**

The OLED display is used to show the real-time values of water parameters locally. It displays information such as the pH level, temperature, and water status. This allows users to monitor the water condition directly from the device without needing to access the cloud platform.

• **Wi-Fi Network**

The Wi-Fi network enables the ESP32 to connect to the internet and send sensor data to the cloud. Through this connection, the measured pH and temperature values are transmitted to the ThingSpeak platform for storage, visualization, and remote monitoring.

• **ThingSpeak Cloud Platform**

ThingSpeak is an IoT cloud platform used to store, analyze, and visualize the sensor data. The ESP32 sends the collected data to ThingSpeak, where it is displayed in the form of graphs. This allows users to monitor water quality remotely and observe changes in water parameters over time.

• **Power Supply**

A stable power supply is required to operate the ESP32 microcontroller, sensors, and OLED display. The system can be powered using a USB power adapter or other regulated power source to ensure continuous operation of the water quality monitoring system.

4.4 Software Logic

The software logic of the IoT-Based Water Quality Monitoring System controls how the sensor data is collected, processed, displayed, and transmitted to the cloud. The system is programmed using Embedded C in the Arduino IDE and runs on the ESP32 microcontroller. The logic ensures continuous monitoring of water parameters and periodic uploading of the collected data to the cloud platform ThingSpeak.

The overall software logic flow is as follows:

• **System Initialization**

Initialize serial communication for debugging and monitoring.

Configure the pH sensor analog input pin.

Initialize the DS18B20 temperature sensor using the OneWire communication protocol.

Initialize the OLED display for local data visualization.

Connect the ESP32 to the Wi-Fi network.

Initialize the ThingSpeak cloud communication.

- **Sensor Data Acquisition**

Read the analog value from the pH sensor.

Convert the analog value into voltage.

Calculate the pH value using the calibration formula.

Request temperature data from the DS18B20 sensor.

Read the temperature value from the sensor.

- **Water Quality Evaluation**

Compare the pH value with the acceptable range for normal water conditions.

Determine the water status based on the measured pH value.

Prepare the sensor data for display and cloud transmission.

- **Local Display Update**

Display the pH value on the OLED screen.

Display the temperature value in degrees Celsius.

Show the water status such as normal or check pH.

- **Cloud Data Upload**

Every fixed time interval (for example 15 seconds), send:

- `Field 1` → `pH value`
- `Field 2` → `Temperature value`

Upload the data to the ThingSpeak cloud platform through Wi-Fi.

Handle Wi-Fi reconnection if the network connection is lost.

- **Continuous Monitoring Loop**

Repeat sensor reading, data processing, display update, and cloud upload.

Maintain continuous real-time monitoring of water quality.

5. IMPLEMENTATION DETAILS

5.1 Implementation Platform

The implementation of the IoT-Based Water Quality Monitoring System is carried out using both hardware and software components that work together to monitor water parameters in real time. The hardware platform is based on the ESP32 microcontroller, which acts as the central processing unit of the system. Sensors such as the pH sensor and DS18B20 temperature sensor are connected to the ESP32 to measure water quality parameters. An OLED display is also interfaced with the microcontroller to show real-time values of pH and temperature locally.

The software implementation is developed using the Arduino IDE with Embedded C programming. The ESP32 program reads the sensor values, processes the data, and displays the results on the OLED screen. In addition, the ESP32 uses its built-in Wi-Fi capability to connect to the internet and send the collected data to the ThingSpeak cloud platform. This allows the sensor data to be stored, visualized, and monitored remotely through graphical dashboards.

5.2 Implementation Steps

• Install the Arduino IDE and required libraries for ESP32, OLED display, temperature sensor, and ThingSpeak communication.
• Connect the pH sensor to the analog input pin of the ESP32 microcontroller.
• Connect the DS18B20 temperature sensor to the ESP32 using the OneWire communication pin.
• Interface the OLED display with the ESP32 using the I2C communication pins.
• Configure the Wi-Fi network credentials in the program to enable internet connectivity.
• Initialize the sensors, OLED display, and Wi-Fi connection in the program.
• Read the pH sensor values from the analog input and convert them into pH values using the appropriate formula.
• Read the temperature values from the DS18B20 sensor.
• Display the pH value and temperature on the OLED display for local monitoring.
• Send the sensor data to the ThingSpeak cloud platform through Wi-Fi.
• Continuously repeat the process to ensure real-time monitoring of water quality parameters.

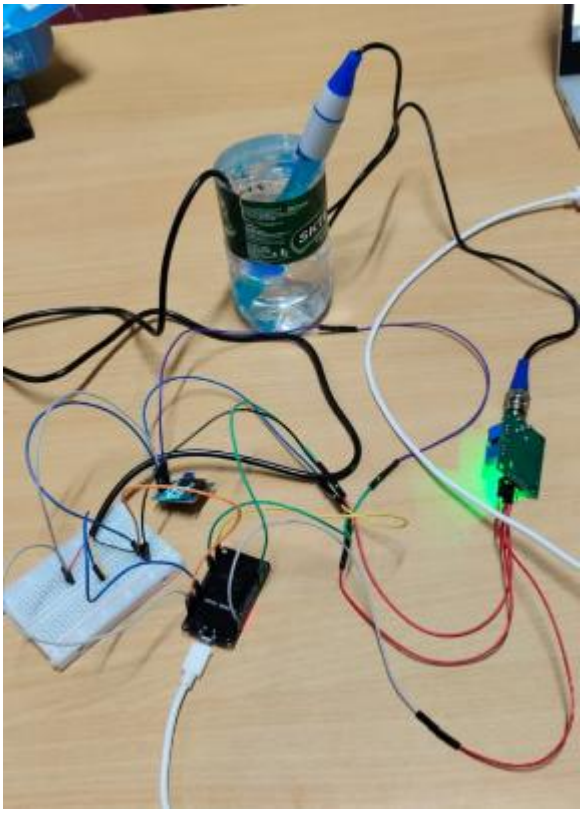

Fig 5.2: Experimental Setup of IoT-Based Water Quality Monitoring System

5.2.1 Outputs :

Fig 5.2.1.1 : OLED Display Output of Water Quality Monitoring System

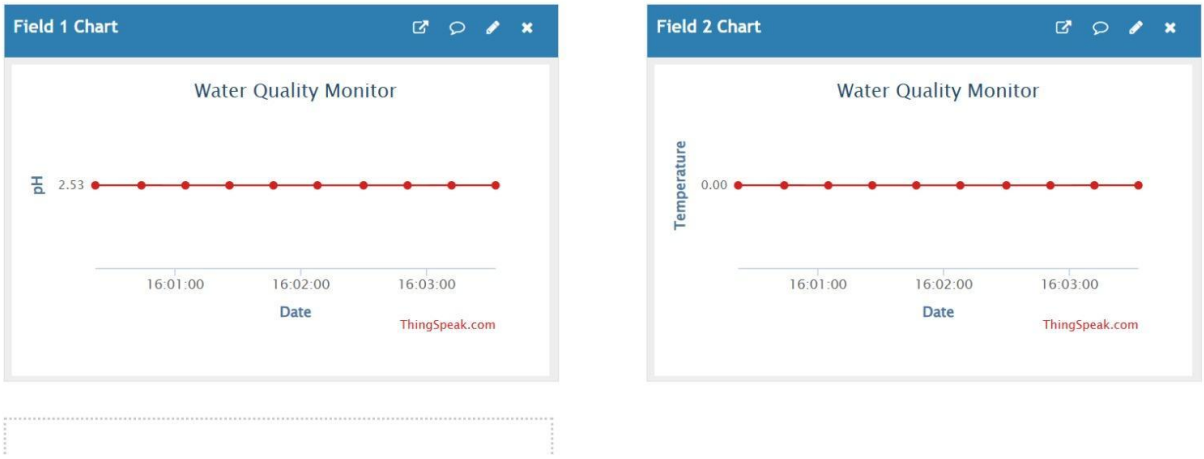

Fig 5.2.1.2 : ThingSpeak Cloud Monitoring Interface

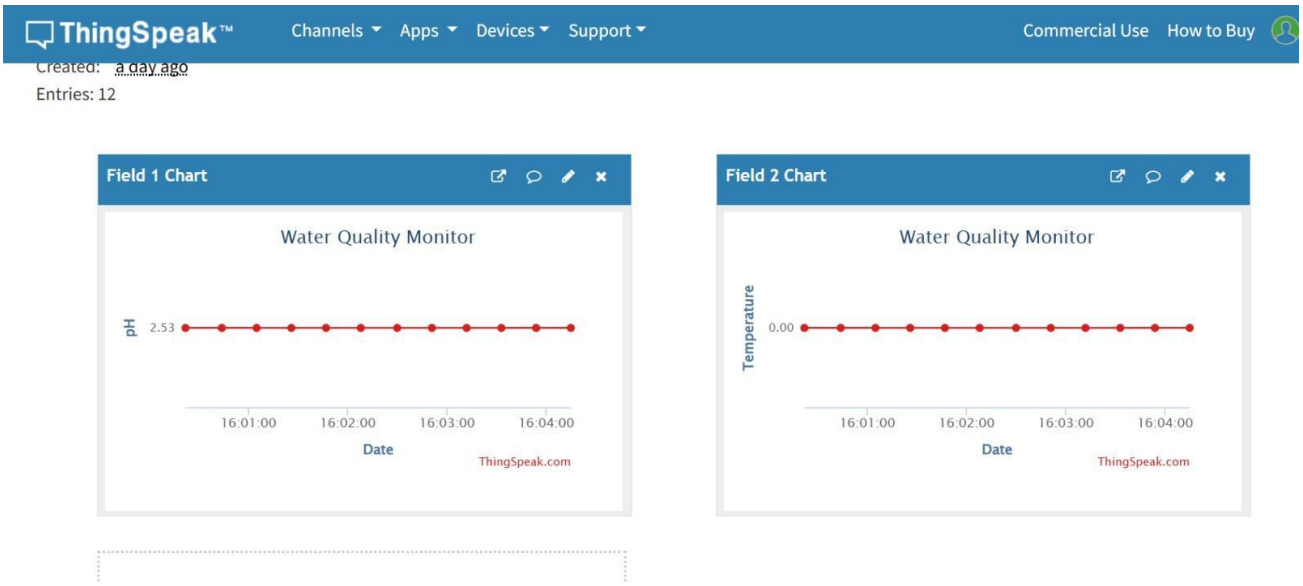

Fig 5.2.1.3 : ThingSpeak Dashboard Showing Water Quality Data

5.3 Working Principle

The working principle of the IoT-Based Water Quality Monitoring System is based on collecting water parameter data using sensors and transmitting the information to a cloud platform for monitoring. The pH sensor and DS18B20 temperature sensor are used to measure the acidity level and temperature of the water sample. These sensors are connected to the ESP32 microcontroller, which acts as the central processing unit of the system. The

pH sensor produces an analog signal corresponding to the pH level of the water, while the DS18B20 sensor provides digital temperature readings.

The ESP32 reads the sensor values, processes the data, and displays the measured pH and temperature on the OLED display for local monitoring. Using its built-in Wi-Fi capability, the ESP32 also transmits the sensor data to the ThingSpeak cloud platform at regular intervals. The cloud platform stores the data and presents it in graphical form, allowing users to monitor water quality remotely and observe variations in the measured parameters over time.

6. COMPARISON BETWEEN RESEARCH PAPER AND IMPLEMENTED SYSTEM

Feature / Aspect	Research Paper System	Implemented System
System Objective	Develop an advanced IoT-based water quality monitoring system capable of monitoring multiple water parameters for large-scale environmental applications.	Develop a practical IoT-based water quality monitoring prototype with real-time monitoring and cloud integration.
Controller Used	Arduino, ESP8266, or similar IoT microcontrollers.	ESP32 Microcontroller.
Sensors Used	Multiple sensors such as pH, turbidity, temperature, dissolved oxygen, and conductivity sensors.	pH sensor and DS18B20 temperature sensor.
Cloud Integration	Yes. Uses IoT cloud platforms for monitoring and data analysis.	Yes. Sensor data is uploaded to ThingSpeak for monitoring.
User Interface	Web-based dashboards and remote monitoring systems.	OLED display for local monitoring and ThingSpeak dashboard for remote monitoring.
Parameter Monitoring	Monitors several water quality parameters simultaneously.	Monitors pH and temperature of water.
System Complexity	High – involves multiple sensors, networking modules, and complex data processing.	Moderate – includes basic sensors, Wi-Fi communication, and cloud monitoring.
Cost of Implementation	Higher due to multiple sensors and complex system design.	Lower due to fewer hardware components and prototype implementation.
Processing Location	Combination of local processing and cloud-based analytics.	Local processing on ESP32 with cloud storage on ThingSpeak.
Real-Time Monitoring	Mostly through cloud-based monitoring systems.	Provides both local display on OLED and cloud monitoring.
Scalability	Designed for large-scale environmental monitoring systems.	Suitable for prototype and small-scale monitoring applications.
Power Consumption	Higher due to multiple sensors and large network deployment.	Lower due to single-node implementation with limited sensors.
Primary Advantage	Comprehensive monitoring with advanced analytics.	Simple, low-cost, and practical real-time water quality monitoring system.

7. **Modifications Made**

The implemented system includes several modifications compared to the system described in the research paper in order to make the project simpler, cost-effective, and suitable for a prototype demonstration. The research paper proposes a large-scale water quality monitoring system that uses multiple sensors and complex cloud analytics. In this project, the system was simplified by selecting only the essential sensors required for basic water quality monitoring, such as the pH sensor and the DS18B20 temperature sensor.

Another modification made in the implemented system is the use of the ESP32 microcontroller as the main processing unit. The ESP32 provides built-in Wi-Fi connectivity, which simplifies the hardware design and enables direct communication with the cloud platform. The system was also designed to display the measured values locally using an OLED display so that users can view the water parameters without relying entirely on cloud access.

In addition, the system uses the ThingSpeak cloud platform to upload and visualize sensor data. The ESP32 periodically sends the measured pH and temperature values to ThingSpeak, where the data is stored and displayed in graphical form. These modifications make the system easier to implement while still demonstrating the key concept of IoT-based water quality monitoring.

8. Simplifications Performed

The implemented system includes several simplifications to make the project easier to develop and demonstrate as a prototype. In the research paper, the proposed system monitors multiple water quality parameters using several sensors. In this project, the system is simplified by focusing on two important parameters: pH and temperature. This reduces the complexity of the hardware setup while still allowing effective monitoring of basic water quality conditions.

Another simplification is the use of a single microcontroller, the ESP32, to handle sensor data processing and wireless communication. The ESP32 integrates Wi-Fi capability, eliminating the need for additional communication modules. This makes the system more compact, cost-effective, and easier to implement.

Additionally, the system uses a simple cloud platform, ThingSpeak, for data storage and visualization. Instead of implementing complex data analytics or large-scale monitoring networks, the project focuses on demonstrating real-time data upload and graphical visualization of sensor readings. These simplifications help in developing a practical and functional prototype of an IoT-based water quality monitoring system.

9. Limitations of the Implemented System

The implemented IoT-Based Water Quality Monitoring System has some limitations due to the use of limited hardware components and its prototype-level design. The system currently measures only two water quality parameters, pH and temperature. Other important parameters such as turbidity, dissolved oxygen, and conductivity are not included, which limits the ability to perform a complete water quality analysis.

Another limitation of the system is its dependence on a stable Wi-Fi connection for cloud communication. If the internet connection is unavailable or unstable, the system cannot upload data to the ThingSpeak platform for remote monitoring. Although local values can still be viewed on the OLED display, remote access to the data becomes unavailable during connectivity issues.

The accuracy of the system also depends on proper sensor calibration and environmental conditions. The pH sensor may require periodic calibration to maintain accurate readings, and incorrect calibration can lead to measurement errors. Additionally, since the system is designed as a small-scale prototype, it is more suitable for demonstration and educational purposes rather than large-scale industrial or environmental monitoring applications.

10. Conclusion

The IoT-Based Water Quality Monitoring System developed in this project demonstrates an effective method for monitoring important water parameters using sensor technology and cloud connectivity. The system uses a pH sensor and a DS18B20 temperature sensor connected to the ESP32 microcontroller to measure water quality parameters. The collected data is processed by the ESP32 and displayed locally on an OLED display for real-time monitoring.

In addition to local monitoring, the system uses Wi-Fi connectivity to transmit the sensor data to the ThingSpeak cloud platform. The uploaded data is stored and visualized in the form of graphs, allowing users to monitor water quality remotely. This feature makes it possible to observe variations in water parameters over time and detect abnormal conditions.

Overall, the implemented system provides a simple, low-cost, and efficient solution for real-time water quality monitoring. Although the system currently measures only a limited number of parameters, it successfully demonstrates the concept of IoT-based environmental monitoring and can be further expanded by adding additional sensors and advanced data analysis features in the future.

11. Future Enhancements

The proposed IoT-Based Water Quality Monitoring System can be further improved by adding additional sensors to measure more water quality parameters. Sensors such as turbidity sensors, dissolved oxygen sensors, and conductivity sensors can be integrated into the system to provide a more comprehensive analysis of water quality. Monitoring multiple parameters will help in better understanding the condition of water and detecting different types of contamination.

Another possible enhancement is the development of a mobile application or web-based interface for easier access to the monitoring system. Instead of relying only on the cloud dashboard, users could receive real-time notifications and alerts through a mobile application when abnormal water conditions are detected. This would improve the usability and accessibility of the system.

The system can also be improved by implementing data analysis and prediction techniques. By using machine learning algorithms, historical sensor data stored in the cloud can be analyzed to predict changes in water quality over time. This would help in identifying potential risks and taking preventive actions before water conditions become unsafe.

In addition, the system can be expanded for large-scale environmental monitoring applications. Multiple sensor nodes can be deployed at different water sources such as rivers, lakes, and reservoirs. These nodes can send data to a centralized monitoring system, enabling authorities to monitor water quality across larger areas and support the development of smart environmental monitoring systems.

12. References

1. Kumar, A., & Hancke, G. P. (2014). A ZigBee-based animal health monitoring system. This study discusses the use of wireless sensor networks for environmental and health monitoring applications, including water quality monitoring.

2. Geetha, S., & Gouthami, S. (2017). Internet of Things enabled real time water quality monitoring system. The paper proposes an IoT-based system that monitors water parameters such as pH, turbidity, and temperature using sensors and cloud connectivity.

3. Vijayakumar, N., & Ramya, A. (2015). The real-time monitoring of water quality in IoT environment. This research presents a system that uses sensors and microcontrollers to continuously monitor water quality and transmit data through IoT platforms.

4. Pasika, S., & Gandla, S. T. (2020). Smart water quality monitoring system with cost-effective using IoT. The study describes an IoT-based system that measures parameters such as pH, turbidity, and temperature and sends the data to cloud platforms for remote monitoring.

5. Khatri, N., & Tyagi, S. (2015). Influences of natural and anthropogenic factors on surface and groundwater quality in rural and urban areas. The paper discusses factors affecting water quality and highlights the importance of continuous monitoring systems.

6. MathWorks. ThingSpeak IoT Analytics Platform Documentation. This documentation explains how ThingSpeak is used to collect, analyze, and visualize sensor data using cloud technology.

7. Espressif Systems. ESP32 Technical Reference Manual. This document provides detailed information about the architecture, Wi-Fi connectivity, and features of the ESP32 microcontroller used in IoT applications.