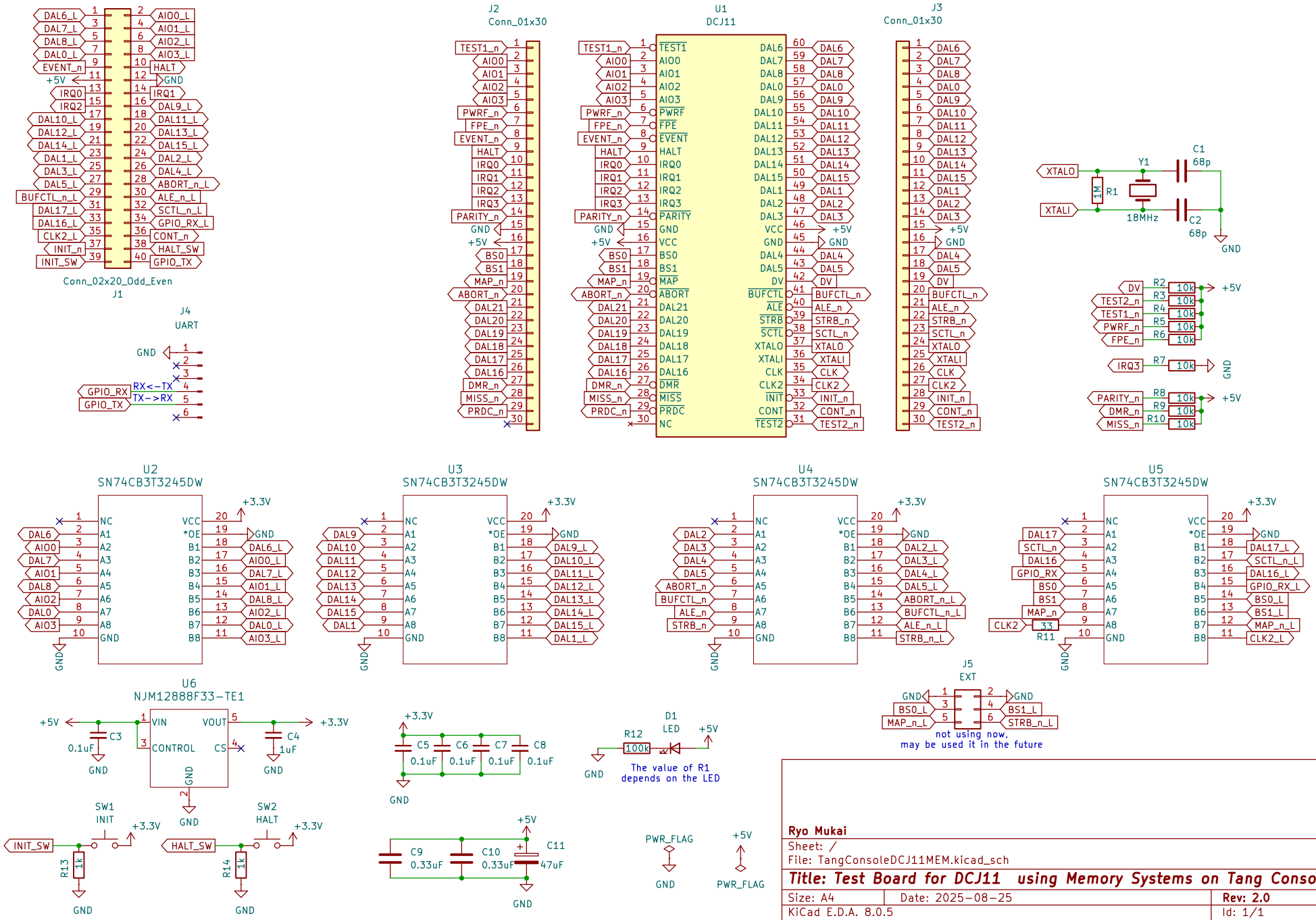

Ryo Mukai

Sheet: /

File: TangConsoleDCJ11MEM.kicad_sch

Title: Test Board for DCJ11 using Memory Systems on Tang Console

Size: A4	Date: 2025-08-25	Rev: 2.0
KiCad E.D.A. 8.0.5		Id: 1/1