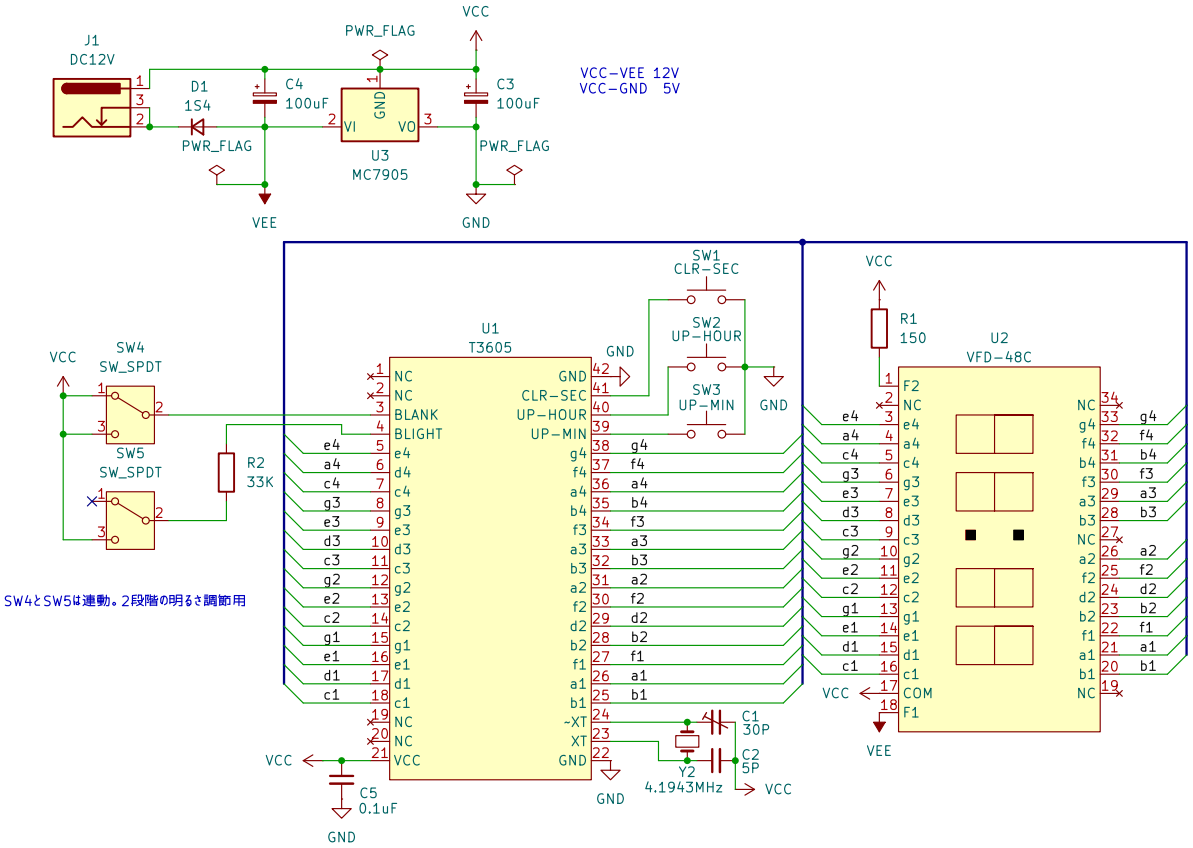

kanpapa.com

Sheet: /

File: vfdclock.kicad_sch

Title: VFD Clock

Size: A4	Date: 2025-01-22	Rev: 1.1
KiCad E.D.A. 8.0.8		Id: 1/1