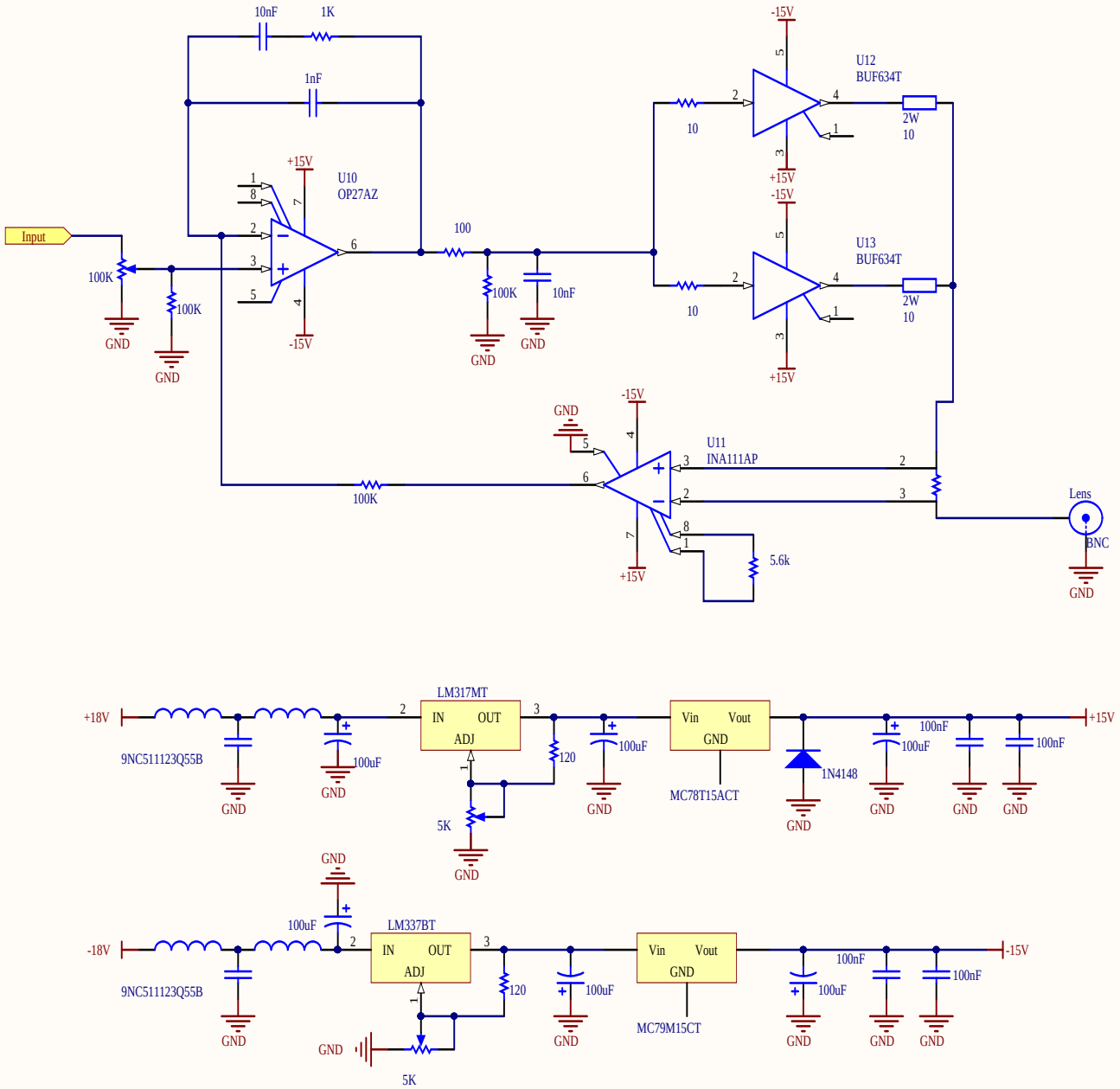

Title		
Size A4	Number	Revision
Date: 25/08/2018		Sheet of
File: C:\Users\..\currentdriver.SchDoc		Drawn By: