SCOAP: SANDIA CONTROLLABILITY/OBSERVABILITY ANALYSIS PROGRAM*

Lawrence H. Goldstein
and
Evelyn L. Thigpen
Sandia National Laboratories
Albuquerque, NM 87185

Abstract

SCOAP is a program developed at Sandia National Laboratories for the analysis of digital circuit testability. Testability is related to the difficulty of controlling and observing the logical values of internal nodes from circuit inputs and outputs, respectively. This paper reviews the testability analysis algorithms and describes their implementation in the SCOAP program.

Introduction

A method for analyzing the testability of digital circuits was described in detail in Refs. [1 and 2]. Six functions were developed to characterize the controllability/observability (C/O) properties of the internal nodes of a digital circuit. They provide a quantitative measure of the difficulty of controlling and observing the logical values of internal nodes from consideration of circuit topology alone, without analyzing particular sequences of input and state vectors. The measures derived are easy to compute and accurately characterize the C/O properties of interest. Correlation of these measures with intrinsic characteristics of the structure of a circuit, such as memory separability, was discussed at the 1979 Design for Testability Workshop [3].

This paper describes the SCOAP program implementation of the testability analysis algorithms at Sandia Laboratories. First, related work in the area of design for testability is summarized. Next, the testability analysis method is reviewed. Digital circuit models are presented, the controllability and observability measures are discussed, procedures for analyzing the testability of logic modules and larger circuits are described, and examples are used to illustrate the concepts. Finally, the SCOAP program implementation of the testability analysis algorithms and their use in the Sandia design environment are discussed.

Summary of Related Work

Two major approaches have emerged in recent years to facilitate the development of testable designs: structured design for testability and testability measure analysis. The adoption of a testable design style will impose some constraints upon the designer. However, the advantage of this approach is a guarantee that the resulting digital circuit will possess features to facilitate the test sequence generation and testing processes. An example of structured design for testability is the IBM Level Sensitive Scan Design (LSSD) technique [4].

The testability measure approach attempts to quantify the testability properties of an arbitrary unstructured circuit. The SCOAP program falls into this category. Testability measures can be used to identify poorly controllable or poorly observable sections of a circuit, suggest locations for testpoints, assist in system partitioning, and evaluate more sweeping modifications of circuit architecture. Desirable characteristics of a testability measure are accuracy and ease of computation.

As discussed by Keiner [5], testability measures can be divided into intrinsic and extrinsic types. Extrinsic measures such as fault coverage and fault resolution require consideration of both a circuit and its associated test sequence. Intrinsic or inherent testability is a deterministic property of a circuit that excludes test stimulus/response considerations. SCOAP attempts to measure aspects of the inherent testability of a circuit.

Such testability measures as gate count, number of I/O pins, and controllability/observability (C/O) matrices for linear sequential machines have been considered and compared for consistency by Dejka [6]. Unfortunately, these measures are either too crude or too specialized to be useful in general.

Stephenson and Grason [7] developed testability measures normalized between 0 and 1 for register transfer level digital circuits. Their approach is based on the relationship between testability and the uniformity of mapping inputs to outputs through logic modules. TMEAS is a computer program developed at Bell Laboratories that implements this measure [8]. Several examples tend to indicate a good correlation between testability values and actual test generation effort.

Breuer [9] worked on characterizing the costs associated with setting lines internal to a digital circuit to specified logical values and driving these values to primary outputs. These measures are not normalized, and their values tend to increase as circuit testability decreases. They were developed to improve the efficiency of automated test sequence generation by providing estimates of the difficulty of node justification and propagation operations. The testability measures implemented in SCOAP are more closely related philosophically to Breuer's cost functions than to Stephenson and Grason's measures. Another related approach was described by Kovijanic [10] and implemented in the program TESTSCREEN.

A variety of additional techniques have been proposed for dealing with testability problems. They include information theoretic testability measures [11], analysis and system reorganization to enhance testability using COMET [12], and diagnosability theory for digital systems [13].

SCOAP Analysis

The Sandia Controllability/Observability Analysis Program (SCOAP) calculates six functions which characterize the controllability/observability properties of a digital circuit. These functions can be computed efficiently, and they accurately measure the difficulty of controlling and observing the logical

*This work supported by the U.S. Department of Energy.

values of internal nodes from consideration of circuit topology alone. Vector generation and simulation algorithms are not used.

Digital Circuit Description

A digital circuit is described to SCOAP as the interconnection of standard cells from a standard cell library. These cells are divided into two types: combinational and sequential where the output of a combinational standard cell at a specified time depends only upon its inputs at that time, and the output of a sequential standard cell depends upon both its inputs and internal state. That is, a sequential cell has memory and a combinational cell does not. The SCOAP standard cell library includes such basic combinational elements as AND gates, OR gates, inverters, buffers, such basic sequential elements as flip-flops, and more complex logical functions created by combining basic elements. Utilization of a standard cell library incurs no loss of generality in the circuits that can be described since no restriction is placed by the SCOAP program upon the contents of the library.

As an example of a SCOAP circuit description, consider the three-stage feedback shift register circuit in Figure 1. A standard cell net list description of this circuit, suitable for input to the SCOAP program, is presented in Figure 2. Within this standard cell net list, the line beginning with the word "INPUT" contains a list of the primary input nodes of the circuit. The line starting with "OUTPUT" is a list of primary circuit outputs. Three types of standard cells are used: where C1470 is a positive-edge-triggered D-flip-flop, C1720 is a 2-input OR gate, and C2310 is an exclusive-OR. Each standard cell name is followed by a list of circuit node names corresponding with the outputs, then inputs of the cell. The net list is terminated with the word "END."

Controllability/Observability Measures

The controllability/observability functions computed by SCOAP are divided into two classes: combinational and sequential. They associate with each node in the circuit six nonnegative integers measuring, respectively, the node's combinational 0-controllability, combinational 1-controllability, combinational observability, sequential 0-controllability, sequential 1-controllability, and sequential observability.

Combinational 0- and 1-controllabilities of an internal node N, $CC^0(N)$ and $CC^1(N)$, are related to the the minimum number of combinational node assignments in the circuit required to justify a 0 or 1, respectively, on node N. A "combinational node" is defined as either a primary input node or an output node of a combinational standard cell. The combinational observability of N, CO(N), is related to both the number of combinational standard cells between node N and a primary output terminal and the minimum number of combinational node assignments required to propagate the logical value on node N to a primary output of the circuit. These combinational testability measures can be viewed as cost functions measuring the difficulty in a spatial sense of accomplishing the complete set of node justifications required to control or observe a specified node in the circuit. The more difficult a particular operation is, the larger its associated combinational testability measures will be.

Sequential 0- and 1-controllabilities of a node N, $SC^0(N)$ and $SC^1(N)$, estimate the minimum number of sequential nodes that must be set to specified logical values in order to justify a 0 or 1, respectively, on node N. A "sequential node" is an output node of a sequential standard cell. Sequential controllabilities provide a measure of the number of time frames required to control nodes that are deeply embedded in a digital network from the primary inputs. If it is possible to exploit parallelism inherent in the circuit to simultaneously control groups of sequential nodes, the actual number of time frames needed to set a node of the circuit to a specified logical value may be less than the estimate provided by the sequential controllability measures. The sequential observability of a node N, SO(N), is related to both the number of sequential standard cells between node N and a primary circuit output and the number of sequential standard cells that must be controlled in order to propagate the logical value of N to an output. Additional information and discussion about these combinational and sequential testability measures can be found in Ref. [2].

Controllability/Observability Analysis of Standard Cells

In analyzing the controllability of standard cells, we are interested in determining the difficulty of setting cell output nodes to specified logical values in terms of the corresponding quantities for cell input nodes. The observability of standard cell input nodes depends upon both the cell output node observabilities and the controllabilities of the input nodes and output nodes.

To compute the controllability of a standard cell output node, all possible input assignments that accomplish the desired output node justification are examined, and a number equal to the sum of the controllabilities associated with each of the input assignments considered is computed. The minimum of these numbers, incremented by the cell depth, is defined to be the output node controllability.

Cell depth is a mechanism that can be used to adjust the numbers produced by SCOAP to reflect various properties of interest of the circuit under consideration. In the current implementation of the SCOAP program, all cell depths are defined to be either 0 or 1. The "combinational depth" of a combinational standard cell is defined to be 1, and its "sequential depth" is defined to 0. The combinational depth of a sequential standard cell is defined to be 0, and its sequential depth is defined to be 1. Under these conditions, the interpretations of combinational and sequential controllability and observability numbers in terms of combinational and sequential node assignments discussed in the previous section are valid. If all cell depths were defined to be zero, the combinational controllability numbers, for example, would measure the minimum number of primary input assignments required to control an internal node of a circuit. If one desires to use the SCOAP measures as more general cost functions, cell depths can be assigned to reflect a fairly arbitrary difficulty of propagating controllability or observability information through a cell. Additional discussion about cell depths and their significance can be found in Ref [2].

In order to determine the observabilities of a standard cell input node, all of the cell input assignments that sensitize one or more cell outputs to changes in the specified input are considered. The observability of the input node is defined as the observability of the easiest to observe sensitized output plus the sum of the controllabilities of the minimum cost sensitizing input assignment plus the cell depth.

As an example, consider the C1720, a 2-input OR combinational standard cell used in the three-stage feedback shift register circuit in Figure 1. The C1720 with output Y and inputs X_1 and X_2 realizes the logical function $Y = X_1 + X_2$. In order to assign Y to 0, it is necessary to set both inputs to 0. Therefore,

$$CC^0(Y) = CC^0(X_1) + CC^0(X_2) + 1 \tag{1}$$

and

$$SC^0(Y) = SC^0(X_1) + SC^0(X_2) \quad . \tag{2}$$

Notice that the combinational depth of C1720 equals 1, and its sequential depth equals 0. Y can be set to 1 by either setting X_1 to 1 or by setting X_2 to 1. Hence,

$$CC^1(Y) = \min\left[CC^1(X_1),\ CC^1(X_2)\right] + 1 \tag{3}$$

and

$$SC^1(Y) = \min\left[SC^1(X_1),\ SC^1(X_2)\right] \quad . \tag{4}$$

Observing input X_i, $i \in \{1,2\}$, requires the observation of output Y while the other input is maintained at logical 0. Thus, the C1720 observability equations can be written

$$CO(X_i) = CO(Y) + CC^0(X_{3-i}) + 1,\ i \in \{1,2\} \tag{5}$$

and

$$SO(X_i) = SO(Y) + SC^0(X_{3-i}) \quad . \tag{6}$$

The C1720 combinational controllability equations in (1) and (3) can be written in matrix form as follows:

$$\begin{bmatrix} CC^0(Y) \\ \\ CC^1(Y) \end{bmatrix} = \begin{bmatrix} 1 & 0 & 1 & 0 & 1 \\ 0 & 1 & 0 & 0 & 1 \\ & & \min & & \\ 0 & 0 & 0 & 1 & 1 \end{bmatrix} \begin{bmatrix} CC^0(X_1) \\ CC^1(X_1) \\ CC^0(X_2) \\ CC^1(X_2) \\ 1 \end{bmatrix} \tag{7}$$

The output controllability vector on the left is computed by multiplying the input controllability vector by the combinational controllability matrix. Whenever a "min" is encountered, the scalar product of the next row of the matrix with the input vector is formed, and the minimum of that result and the previously computed result becomes the entry for the current component of the controllability output vector. Multiple minima are handled in an analogous fashion. If no "min" word is encountered, the next output vector component is computed.

Since the matrix in Eq. (7) consists entirely of 0's, 1's, and "min's," it can be represented compactly in a cell library by writing each binary line as an octal number and each "min" line as an M. The resulting library entry line for the C1720 combinational controllability (CC) matrix has the form:

$$25 \quad 11 \quad M \quad 3 \quad . \tag{8}$$

Comparable analyses can be performed for the combinational observability (CO), sequential controllability (SC), and sequential observability (SO) properties of cell C1720, resulting in a complete controllability/observability library entry of the form:

```
NAME C1720
CC  25  11  M  3
CO  205  221                    (9)
SC  24  10  M  2
SO  204  220
END
```

Each combinational and sequential standard cell can be analyzed in the manner indicated above, and entries of the form presented in Eq. (9) can be made in CONLIB, the SCOAP standard cell controllability/observability library.

Controllability/Observability Analysis of Digital Circuits

Using the standard cell controllability/observability information preserved in the CONLIB library mentioned in the previous section and the information about cell interconnections contained in the circuit net list, the following algorithm computes controllability/observability numbers for each node in the digital circuit under consideration.

Phase I: Calculate circuit node controllabilities.

Initializations: For each primary input node I, set

$$CC^0(I) = CC^1(I) = 1$$

and

$$SC^0(I) = SC^1(I) = 0 \quad .$$

For any other node N, set

$$CC^0(N) = CC^1(N) = \infty$$

and

$$SC^0(N) = SC^1(N) = \infty \quad .$$

Working from primary inputs to circuit outputs, use standard cell controllability equations to map cell input node controllabilities into cell output node controllabilities.

Iterate on the above step until the controllability numbers stabilize (to handle feedback loops external to standard cells, etc.).

Phase II: Calculate circuit node observabilities.

Initializations: For each primary output node U, set

$$CO(U) = 0$$

and

$$SO(U) = 0 \quad .$$

For any other node N, set

$$CO(N) = SO(N) = \infty \quad .$$

Working from primary outputs to circuit inputs, use standard cell observability equations together with the previously computed node controllabilities to map cell output node observabilities into cell input node observabilities. The observability of a fanout point is defined to be equal to the minimum of the observabilities of the nodes to which it fans out.

Iterate on the above step until the observability numbers stabilize.

Ref. [2] contains additional discussion relating to the stability and computational characteristics of the algorithm.

As an example of the application of the SCOAP algorithm to a digital circuit, consider the three-stage feedback shift register in Figure 1. With the standard cell net list in Figure 2 as input, SCOAP produces seven sorted controllability/observability (C/O) lists as output. The first list contains circuit node names sorted alphabetically, with each of the C/O numbers associated with a particular node written across the line corresponding to that node. The next six lists contain the node names successively sorted by each C/O parameter, with the appropriate parameter value written next to its associated node name. This method of presentation conveniently summarizes both the characteristics of the complete set of circuit nodes with respect to each C/O parameter and the complete set of C/O parameters associated with each circuit node.

For the circuit in Figure 1, the SCOAP output sorted alphabetically by node name is presented in Figure 3. Lists of node names sorted by combinational 0- and 1-controllability, respectively, are presented in Figure 4. This combinational controllability information can be summarized graphically, as in the combinational controllability profiles in Figure 5. The profiles summarize circuit controllability information by plotting combinational 0- and 1-controllability on the x-axis against the number of nodes possessing that controllability on the y-axis. The result is a controllability density plot which can be used to characterize the overall controllability of the circuit, pinpoint the least controllable nodes, and suggest circuit modifications to enhance controllability. Automatic generation of controllability and observability profiles is supported in the postprocessor module of the production version of the SCOAP program.

For the feedback shift register circuit in Figure 1, the lists in Figure 4 and the profiles in Figure 5 indicate that it is generally more difficult to set nodes to a logical 0 than a logical 1. Examination of the circuit diagram reveals a mechanism for injecting 1's into the shift register through the use of the I-input. No analogous capability exists for the injection of 0's. It is therefore necessary to utilize the circuit's feedback mode in order to set most internal nodes to logical 0. The increased difficulty of this process over the injection of 1's through an OR gate is reflected by the shifting of a group of 0-controllability peaks to the right of their 1-controllability counterparts in Figure 5. The sequence of peaks themselves indicates that the difficulty of controlling a node increases with distance down the line of flip-flops. This location-dependent control difficulty combines with the increased difficulty of justifying most internal nodes to a logical 0 to create a situation within which the most difficult operation is setting the feedback line FB to a logical 1. Indeed, $CC^1(FB) = 26$, the largest combinational controllability number in the Figure 5 profile.

Figure 6 contains the lists of node names sorted by sequential 0- and 1-controllability, respectively. The corresponding sequential controllability profiles are illustrated in Figure 7. These profiles provide an indication of the number of time frames required to accomplish various node justifications in the Figure 1 circuit. They reinforce the observation that it is generally more difficult to set internal nodes to a logical 0 than a logical 1. The series of flip-flops in the feedback shift register circuit maps into a plateau between 1 and 3 on the sequential 1-controllability profile and a plateau between 5 and 7 on the sequential 0-controllability profile. Again, the most difficult operation is setting feedback line FB to a logical 1, with $SC^1(FB) = 8$.

The list of node names sorted by combinational observability numbers is presented in Figure 8. Figure 9 contains the combinational observability profile. Since the node OUT3 is a primary output of the Figure 1 circuit, its combinational observability number is equal to 0. As distance from the primary output increases down the line of flip-flops and gates, the difficulty of propagating a logical value to the output increases and the combinational observability numbers increase correspondingly. This behavior is reflected by the series of peaks between 2 and 8 in the combinational observability profile. While it is not always true that the primary inputs of a circuit are the most difficult nodes to observe, for the circuit in Figure 1 this is indeed the case. The combinational observability peaks at 20 and 25 correspond to the primary inputs I and CLK, respectively.

Figure 10 contains the list of node names sorted by sequential observability. This information is represented graphically in the sequential observability profile in Figure 11. The plateau and peak between 0 and 3 correspond to the same section of circuitry represented by the series of peaks between 0 and 8 in Figure 9. The region of Figure 11 between 7 and 8 reinforces the conclusion that the least observable nodes in the Figure 1 circuit are the primary inputs.

SCOAP Implementation

SCOAP has been implemented on the DEC System 10 computer at Sandia Laboratories. It is written primarily in structured FORTRAN and is designed to be reasonably portable. The source code consists of approximately 3000 lines, 35 percent of which are comments.

Program Structure

SCOAP consists of six modules: a control program, preprocessor, translation module, calculation module, and two postprocessors which provide sorting and graphing capabilities. The program also uses two specialized libraries. The current version of SCOAP can process inputs containing up to 10,000 standard cells; provision has been made to extend this capability if necessary. CPU time varies with circuit size and structure, but is so short for designs currently being analyzed at Sandia that the program has been implemented in an interactive mode.

As was mentioned in the SCOAP Analysis section, all cells contained in the net list must also be contained in the two SCOAP libraries, GATLIB and CONLIB. Both libraries are accessed randomly by SCOAP, but also exist in sequential form for ease in modifying with a standard text editor. A special program, SALLIB, is then used to recreate the random libraries from the updated sequential files.

The preprocessor module interactively obtains input and output file names from the designer, checks the designer's directory for the presence of the files, and guards against accidental deletion of a pre-existing output file with the same name. The translation module then reads the net list, and using data obtained from the gate level library, expands the cells, producing both a functional level net list and a fundamental gate net list. In addition, it generates new names for the nodes to avoid possible duplication between user-defined cell names and internal node names from the library.

The calculation module utilizes the controllability/observability data from the C/O library, CONLIB, and the functional level net list to calculate and assign the four controllability and two observability values to each cell. This information is passed to the sorting program, which outputs the original net list and C/O values in alphabetical order by cell name, and a list for each of the six controllability/observability functions sorted by cell name within C/O value. This file may be output on either the line printer or the designer's terminal.

The graphing module automatically produces controllability/observability profiles of the type defined in the SCOAP Analysis section. The axes of each profile are variable to provide the maximum resolution compatible with the data. A windowing capability has also been included to support even greater resolution over subsections of the graphs. In addition to the default terminal output, a designer may request line printer hard copies. Instructions are provided within the program for both experienced and novice users, and the level of instruction may be changed by the user during program execution.

Run Time Characteristics

CPU time for a SCOAP run varies with the size and ordering of the net list. Execution time statistics presented here refer to runs producing the six basic graphs without windowing. Windowing adds approximately 0.5 sec of CPU time per graph, depending upon the length of the net list.

A seven-stage feedback shift register containing 32 cells can be processed in approximately 7 CPU seconds. An optimally structured circuit of 250 cells takes 27.72 CPU seconds, while a worst-case structure of the same size takes 1:30.80. When the net lists are well ordered, CPU time is linearly proportional to input size. Some consideration was given to automatically preordering the net lists. However, experience has indicated that designers tend to order their input in a near optimal fashion. This factor, coupled with the present circuit size range, indicated that preordering would not be cost effective at this time.

SCOAP has been written to be easy for the designer to use. An input file may be created with any text editor. Running SCOAP does not call for knowledge of any special programming language. The input from the user is either the name of a file or a one-word answer to a straightforward question such as, "Do you want a copy of your graph?" A user's manual is available to provide detailed information on creating input files and interpreting the results.

Use in Sandia's Design Environment

SCOAP is now a working program, and it has been integrated into Sandia Laboratories' CAD system. It has been used in the design of several LSI complexity digital circuits to identify potential problems and suggest circuit modifications to enhance testability. The two most common types of circuit design problems encountered to date that are amenable to correction through SCOAP analysis are uncontrollable loops and hanging nodes. In an uncontrollable loop, the logical values of nodes in the loop depend only upon the logical values of other nodes in the loop and cannot be controlled from primary inputs of the circuit. SCOAP will flag each of the nodes in a loop of this type as uncontrollable, allowing the designer to identify the problem area on the circuit schematic and take corrective action. SCOAP impacts the problem of hanging nodes by flagging each hanging node as unobservable, reminding the designer to connect it to its proper destination. After uncontrollability and unobservability problems in a digital circuit design have been corrected, SCOAP is typically used to identify areas of poor testability, suggest possible testpoints, and evaluate the impact of design modifications on testability. Design engineers appear satisfied with the user interface to SCOAP.

Conclusions

This paper has described the implementation of the testability analysis algorithms in the SCOAP program at Sandia Laboratories. The testability measures were reviewed, and their relationship to other work in the field of design for testability was discussed. The structure of the SCOAP program itself was described, as well as its run-time characteristics and use in the Sandia design environment. Experience to date has indicated that SCOAP is a valuable tool for testability analysis of LSI complexity digital circuits throughout the design process.

References

[1] L. H. Goldstein, "Controllability/Observability Analysis of Digital Circuits," CANDE Workshop, Mt. Hood, Oregon (1978).

[2] L. H. Goldstein, "Controllability/Observability Analysis of Digital Circuits," IEEE Trans. Circuits and Systems, Vol. 26, No. 9, (1979).

[3] L. H. Goldstein, "Controllability/Observability Analysis of Separable Logic Structures," Design for Testability Workshop, Boulder, Colorado (1979).

[4] E. B. Eichelberger and T. W. Williams, "A Logic Design Structure for LSI Testability," Proc. 14th Design Automation Conf., pp 462-468 (1977).

[5] W. Keiner and R. West, "Testability Measures," AUTOTESTCON, pp 49-55 (1977).

[6] W. J. Dejka, "Measure of Testability in Device and System Design," Proc. 20th Midwest Symposium on Circuits and Systems," pp 39-52 (1977).

[7] J. E. Stephenson and J. Grason, "A Testability Measure for Register Transfer Level Digital Circuits," Proc. 6th Fault-Tolerant Computing Symposium, pp 101-107 (1976).

[8] J. Grason, "TMEAS, A Testability Measurement Program," Proc. 16th Design Automation Conference, pp 156-161 (1979).

[9] Breuer and Associates, TEST/80--An Advanced ATG System for Digital Circuits, Report 1-77.

[10] P. G. Kovijanic, "Testability Analysis," 1979 Semiconductor Test Conference, October 1979.

[11] J. A. Dussault, "A Testability Measure," Proc. 1978 Semiconductor Test Conference, pp 113-116 (1978).

[12] H. Y. Chang and G. H. Heimbigner, "LAMP: Controllability, Observability, and Maintenance Engineering Technique (COMET)," Bell System Tech. J., Vol. 53, No. 8, pp 1505-1534 (1974).

[13] F. Barsi, F. Grandoni and P. Maestrini, "A Theory of Diagnosability of Digital Systems," IEEE Trans. Comput., Vol. C-25, pp 585-593 (1976).

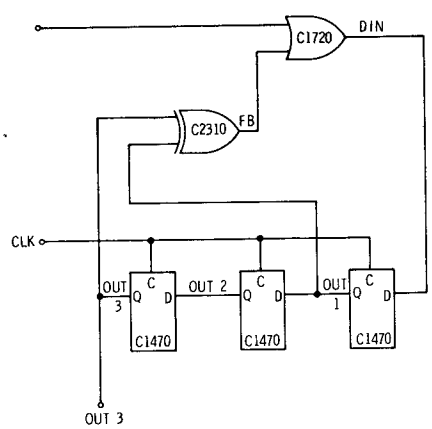

FIGURE 1. THREE-STAGE FEEDBACK SHIFT REGISTER CIRCUIT.

INPUT	I	CLK	
OUTPUT	OUT3		
C1720	DIN	I	FB
C2310	FB	OUT1	OUT3
C1470	OUT1	DIN	CLK
C1470	OUT2	OUT1	CLK
C1470	OUT3	OUT2	CLK
END			

Figure 2. Standard Cell Net List for the Circuit in Figure 1.

NAME	CCNTL0	CCNTL1	COBSRV	SCNTL0	SCNTL1	SOBSRV
CLK	1	1	25	0	0	8
DIN	15	2	6	4	0	3
FB	13	26	8	4	8	3
I	1	1	20	0	0	7
OUT1	17	4	4	5	1	2
OUT2	19	6	2	6	2	1
OUT3	21	8	0	7	3	0

Figure 3. SCOAP Output for the Circuit in Figure 1, Sorted Alphabetically by Node Name

COMBINATIONAL 0-CONTROLLABILITY

CLK	1
I	1
FB	13
DIN	15
OUT1	17
OUT2	19
OUT3	21

COMBINATIONAL 1-CONTROLLABILITY

CLK	1
I	1
DIN	2
OUT1	4
OUT2	6
OUT3	8
FB	26

Figure 4. SCOAP Output for the Circuit in Figure 1, Sorted by Combinational 0- and 1- Controllability, Respectively.

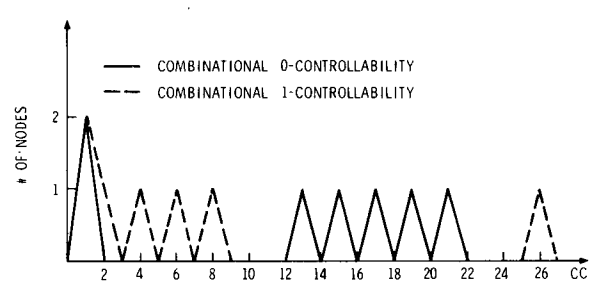

FIGURE 5. COMBINATIONAL CONTROLLABILITY PROFILES FOR THE CIRCUIT IN FIGURE 1.

SEQUENTIAL 0-CONTROLLABILITY

CLK	0
I	0
DIN	4
FB	4
OUT1	5
OUT2	6
OUT3	7

SEQUENTIAL 1-CONTROLLABILITY

CLK	0
DIN	0
I	0
OUT1	1
OUT2	2
OUT3	3
FB	8

Figure 6. SCOAP Output for the Circuit in Figure 1, Sorted by Sequential 0- and 1- Controllability, Respectively.

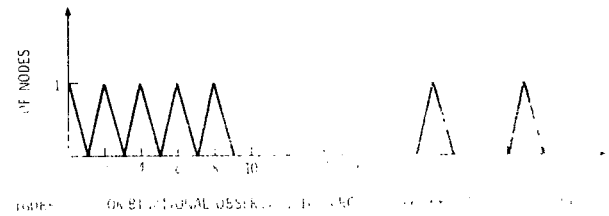

FIGURE 7. SEQUENTIAL CONTROLLABILITY PROFILES FOR THE CIRCUIT IN FIGURE 1.

SEQUENTIAL OBSERVABILITY

OUT3	0
OUT2	1
OUT1	2
DIN	3
FB	3
I	7
CLK	8

Figure 10. SCOAP Output for the Circuit in Figure 1, Sorted by Sequential Observability.

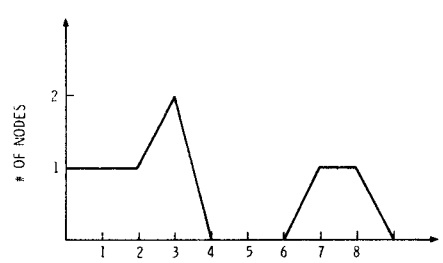

FIGURE 11. SEQUENTIAL OBSERVABILITY PROFILE FOR THE CIRCUIT IN FIGURE 1.

COMBINATIONAL OBSERVABILITY

OUT3	0
OUT2	2
OUT1	4
DIN	6
FB	8
I	20
CLK	25

Figure 8. SCOAP Output for the Circuit in Figure 1, Sorted by Combinational Observability.