Experiment 1: I-V Characteristics of PMOS and NMOS Transistor

***Aim*:** To plot I-V characteristics of PMOS and NMOS Transistor and compute region of operation using LTspice.

***Apparatus Required*:**

- LTspice Software
- NMOS model
- PMOS model
- Voltage sources
- Resistors

***Theory*:**

MOSFET transistors are three-terminal devices controlled by gate voltage. Their operation is divided into regions: Cutoff, Triode, and Saturation. By sweeping VDS for different VGS values, the output characteristics can be obtained. PMOS works similarly but with reversed polarity. These characteristics are essential to understand device behavior in digital and analog design.

Procedure:

1. Open LTspice and create a new schematic.
2. Place NMOS and PMOS transistors using the component library.
3. Connect a DC supply as VDS and another DC source as VGS.
4. Run a DC sweep analysis for VDS from 0V to 5V and VGS with different steps.
5. Plot ID vs VDS for both NMOS and PMOS transistors.

***Observation*:**

For NMOS, ID increases with VDS in saturation region for VGS > Vth. For PMOS, similar trend observed with negative voltages.

***Result*:** I-V characteristics plotted successfully. Operating regions of NMOS and PMOS were identified.

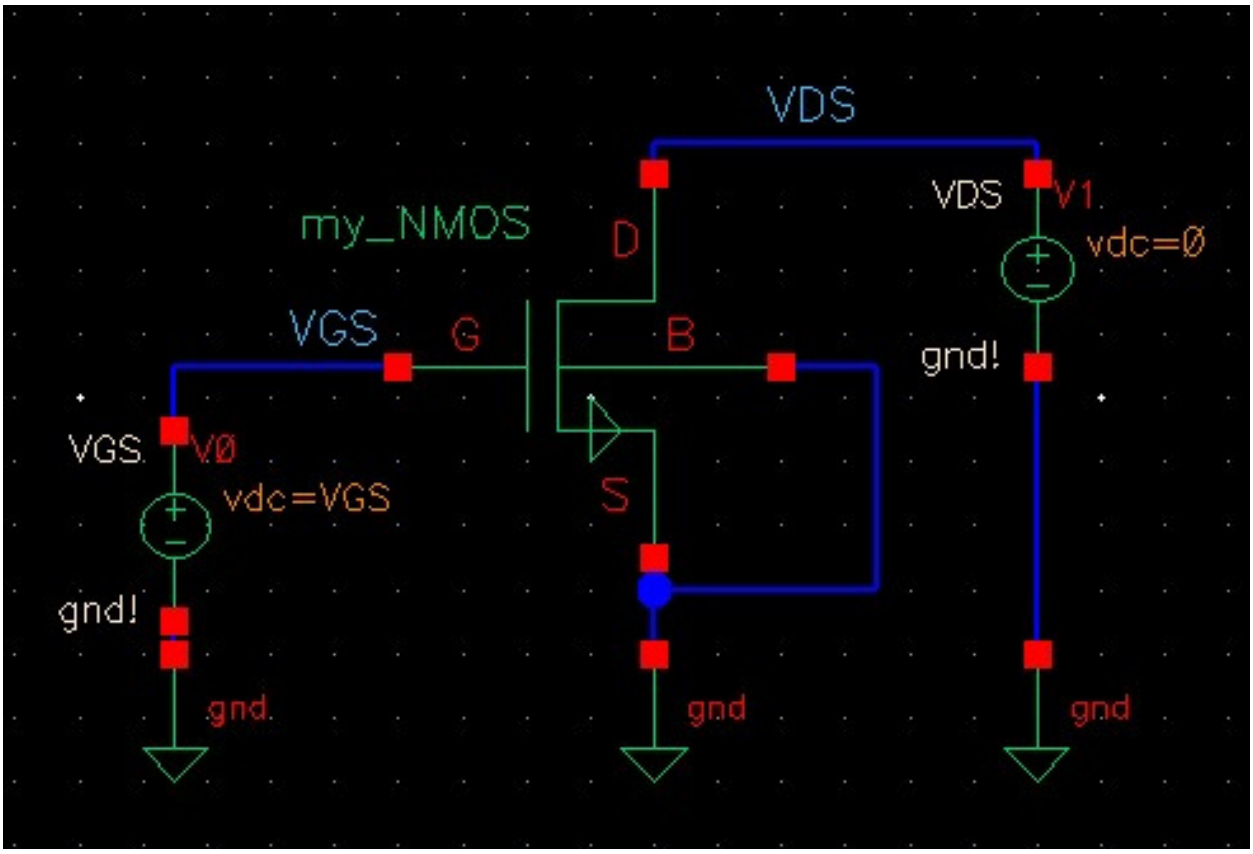
VDS
VDS
V1
vdc=0
my_NMOS
D
VGS
G
B
gnd!
VGS
V0
vdc=VGS
S
gnd!
gnd
gnd
gnd

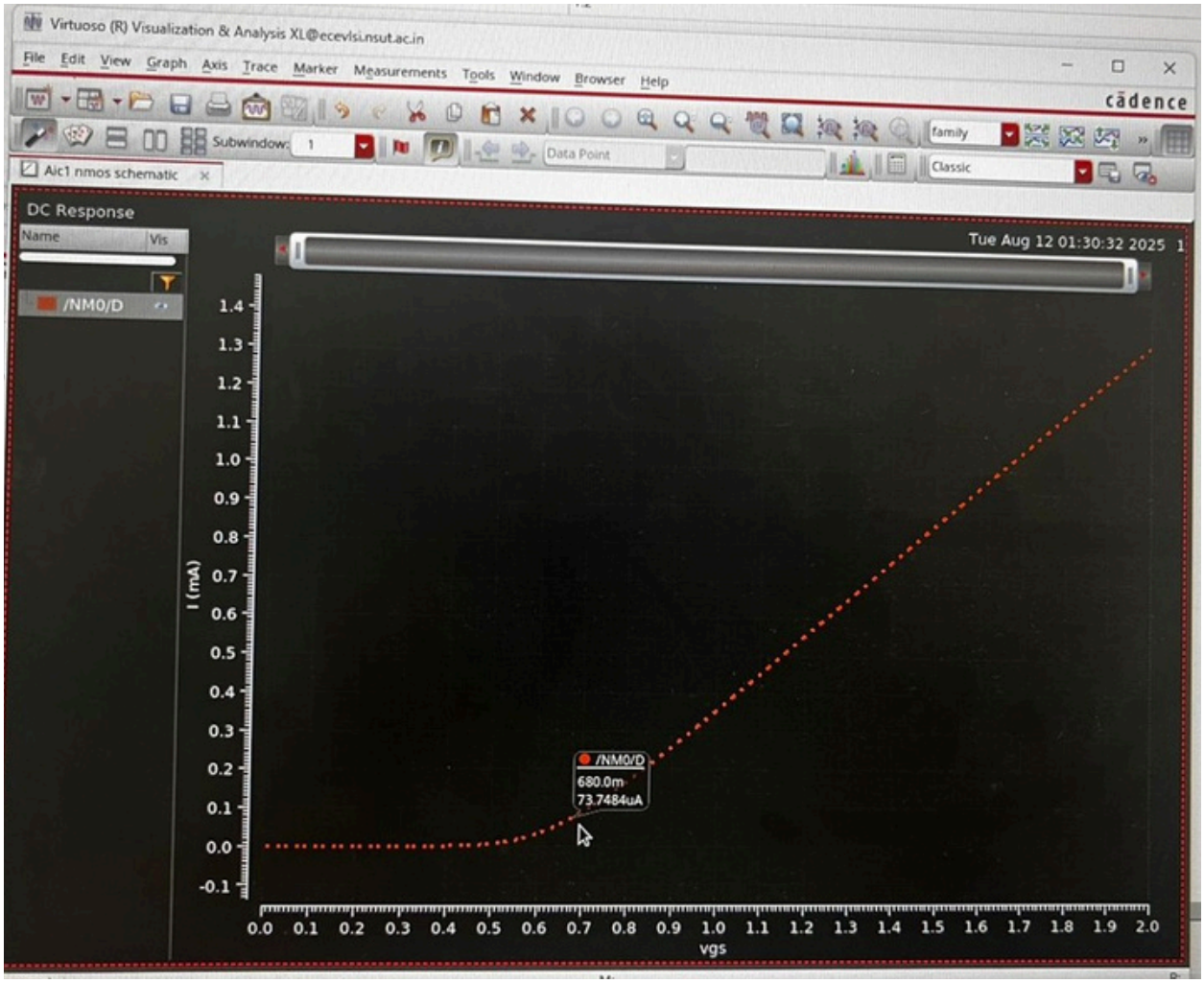
Virtuoso (R) Visualization & Analysis XL@ecevlsi.nsut.ac.in
File Edit View Graph Axis Trace Marker Measurements Tools Window Browser Help
cadence
Aic1 nmos schematic
DC Response
Name
Vis
/NM0/D
Tue Aug 12 01:30:32 2025
I (mA)
vgs
/NM0/D
680.0m
73.7484uA

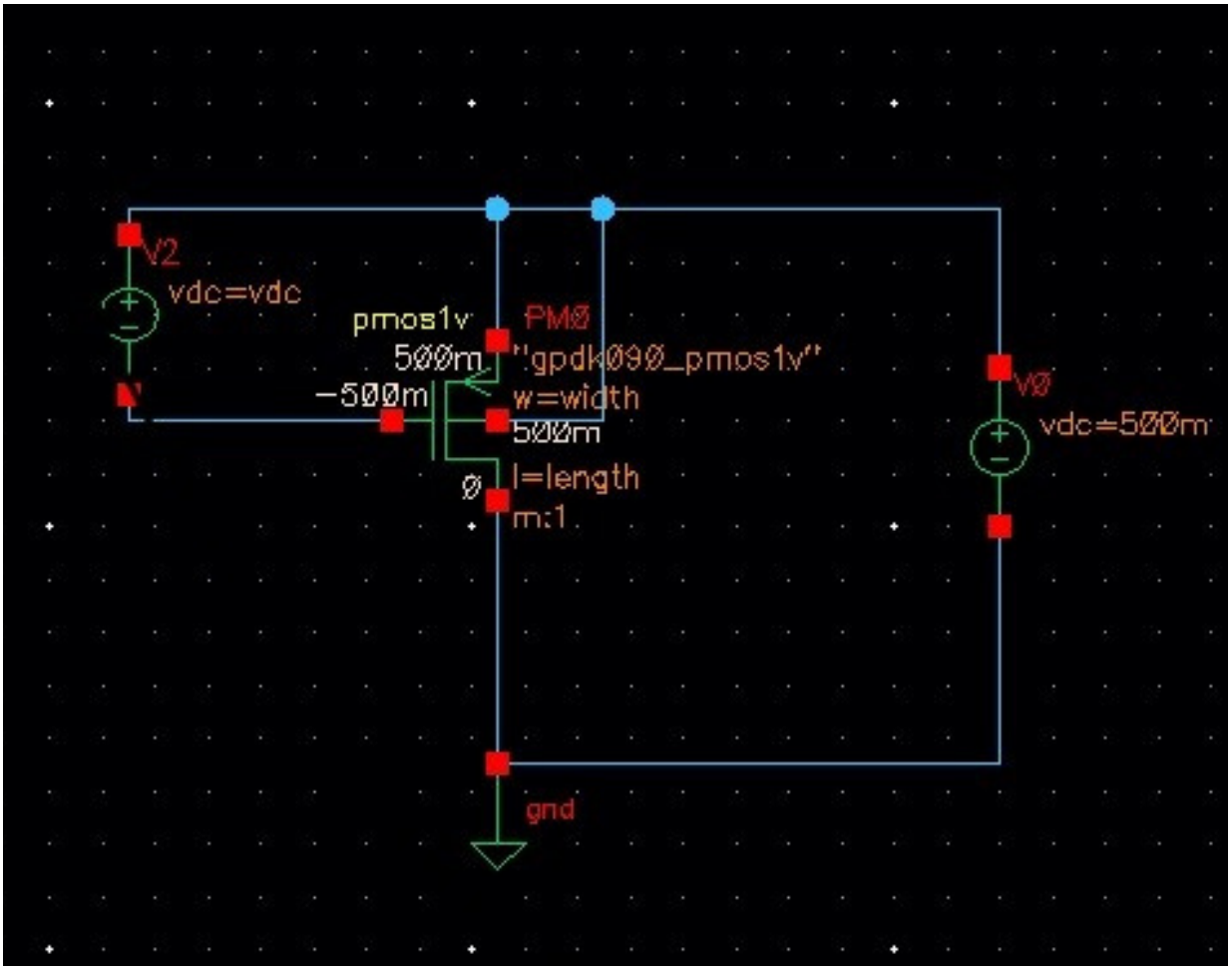
V2
vdc=vdc
pmos1v
500m
-500m
PM0
"gpdk090_pmos1v"
w=width
500m
0
l=length
m:1
V0
vdc=500m
gnd

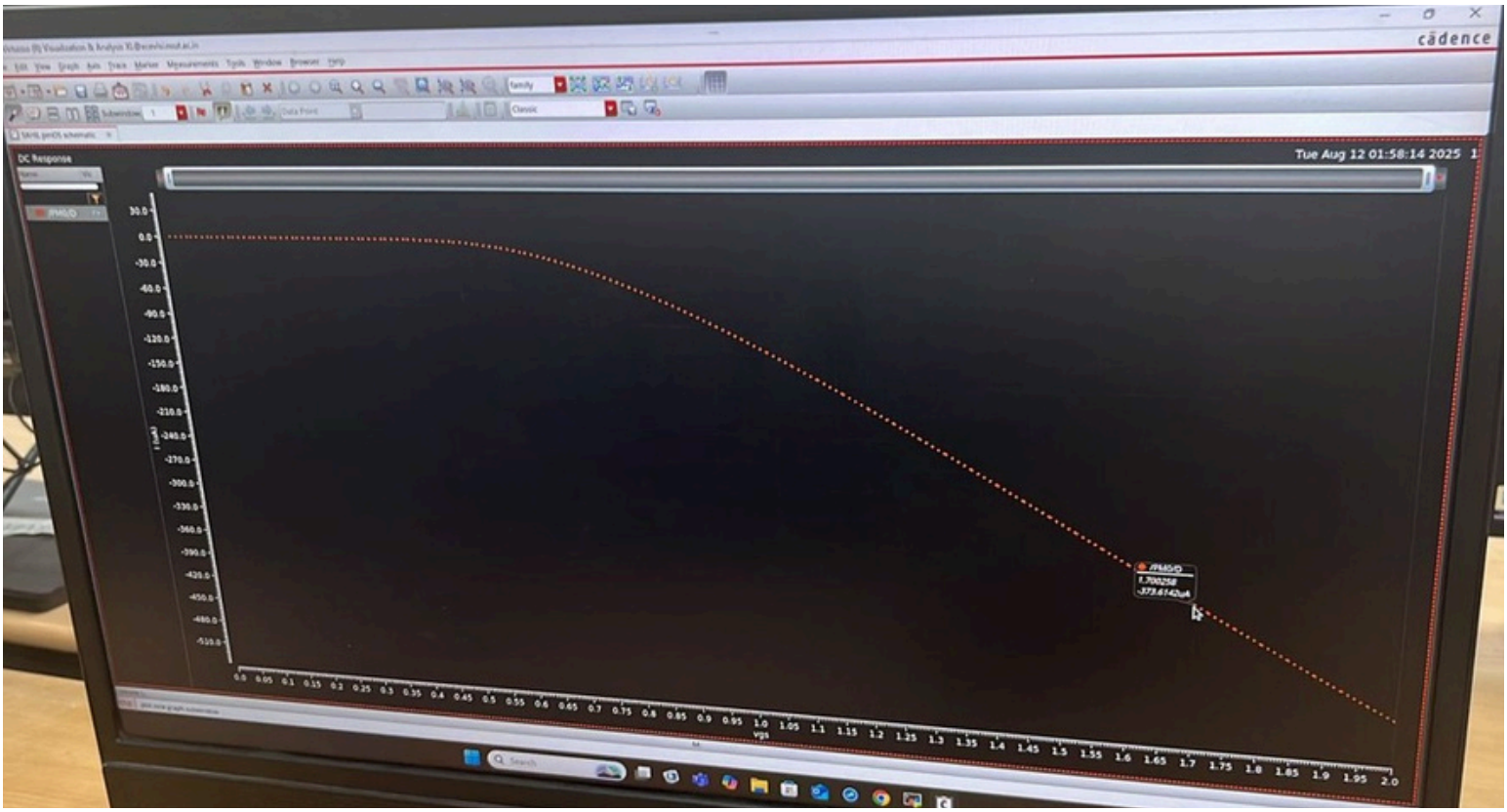
cadence
DC Response
Tue Aug 12 01:58:14 2025

Experiment 2: Noise Margin and Delay in CMOS Inverter

Aim: To compute noise margin and delay using DC and transient analysis for CMOS Inverter in LTspice.

Apparatus Required:

- LTspice Software
- CMOS Inverter (PMOS & NMOS)
- Voltage source

Theory:

CMOS inverter is a fundamental logic gate formed using one NMOS and one PMOS transistor. Noise margin represents tolerance to unwanted signals, while propagation delay is the time taken for output to respond to input transitions. DC analysis helps to find VIL, VIH, VOL, VOH. Transient analysis provides tpHL and tpLH values.

Procedure:

1. Open LTspice and design a CMOS inverter circuit using PMOS and NMOS.
2. Perform DC sweep of input voltage from 0V to VDD.
3. Plot the output transfer characteristics and calculate noise margins.
4. For delay, provide a pulse input signal and run transient analysis.
5. Measure propagation delays (tpHL, tpLH).

Observation: Transfer characteristics showed switching threshold around VDD/2.

Propagation delay observed in nanosecond range.

Result: Noise margin and propagation delay of CMOS inverter determine

successfully.

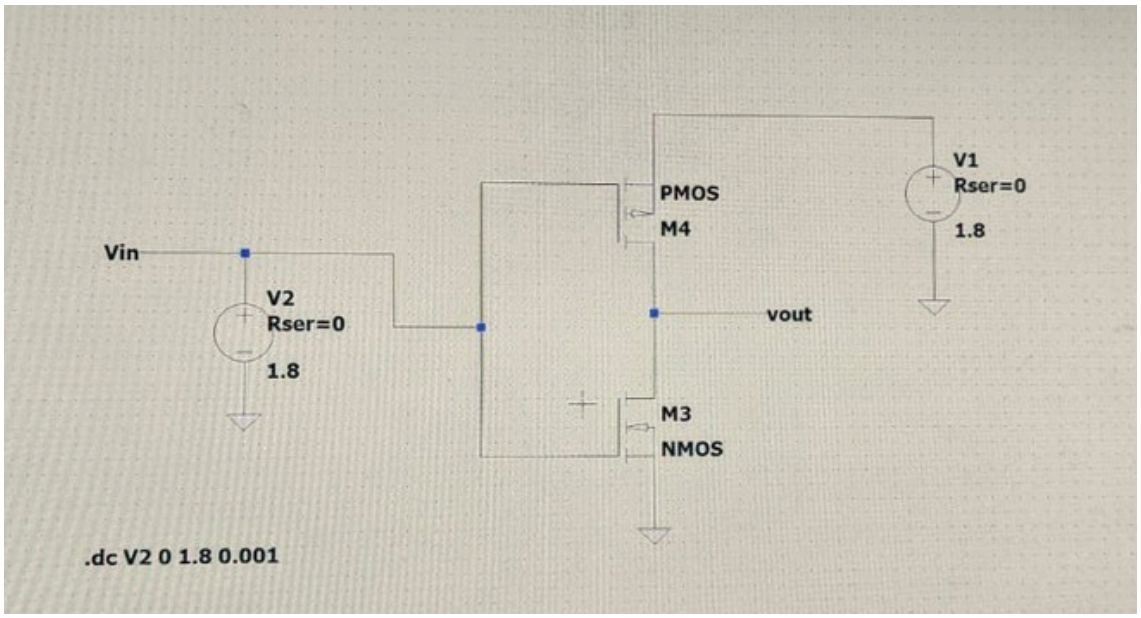
Vin
V2
Rser=0
1.8
PMOS
M4
vout
M3
NMOS
V1
Rser=0
1.8
.dc V2 0 1.8 0.001

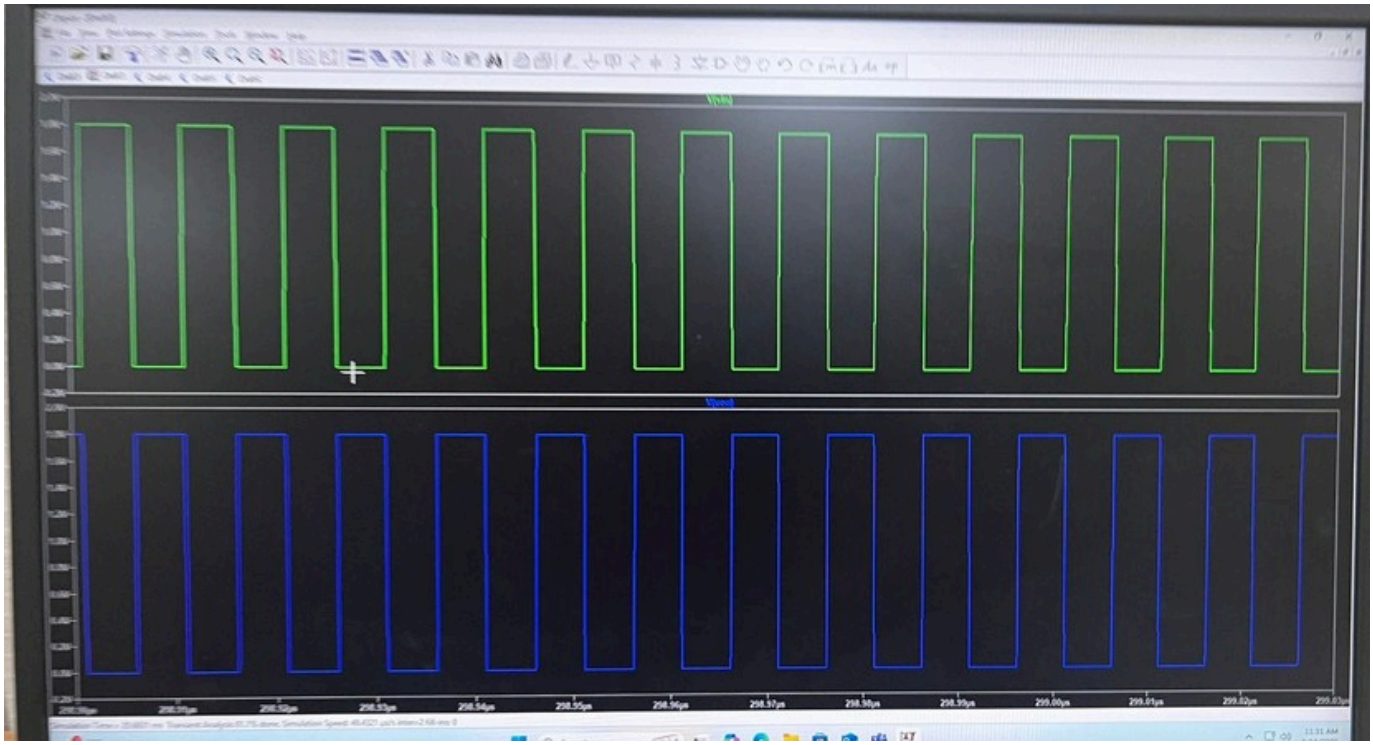

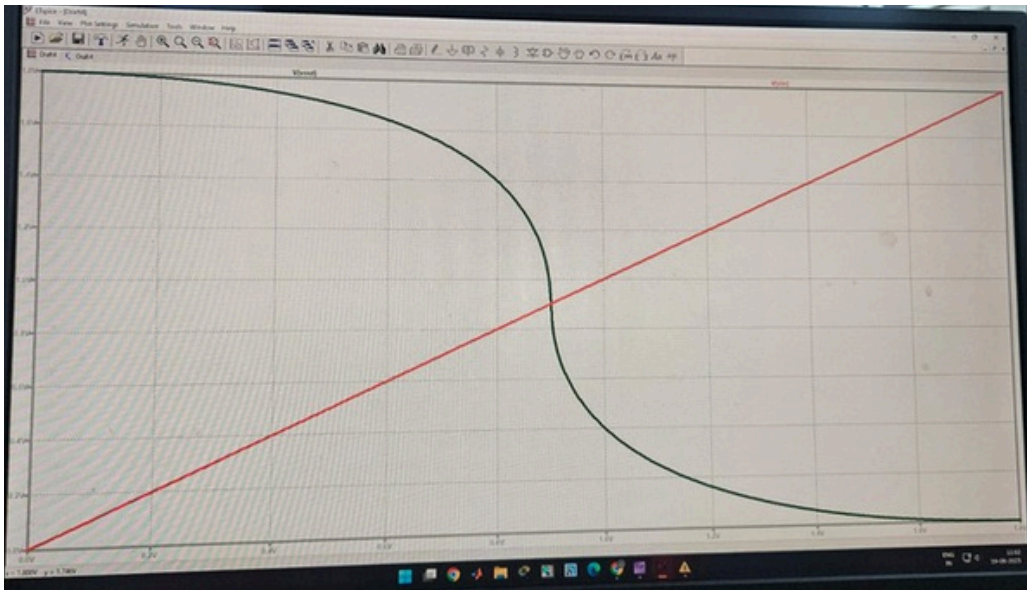

Experiment 3: AC and Transient Analysis of Common Source (CS) Amplifier

Aim: To perform AC and transient analysis of a common source amplifier using LTspice.

Apparatus Required:

- LTspice Software
- NMOS Transistor
- Biasing resistors
- Coupling capacitors
- AC input source

Theory:

Common source amplifier provides voltage gain with phase inversion. AC analysis determines frequency response and midband gain, while transient analysis shows time-domain amplification of sinusoidal inputs. Proper biasing ensures MOSFET operation in saturation region for amplification.

Procedure:

1. Open LTspice and draw a common source amplifier circuit.
2. Apply biasing using resistors and connect coupling capacitors.
3. Provide AC input source with small amplitude sinusoidal signal.
4. Run AC analysis to plot gain vs frequency.
5. Run transient analysis to observe output waveform.

Observation: Midband gain observed as expected. Frequency response showed

-3dB cutoff at designed frequency.

Result: AC and transient analysis of common source amplifier performed

successfully.

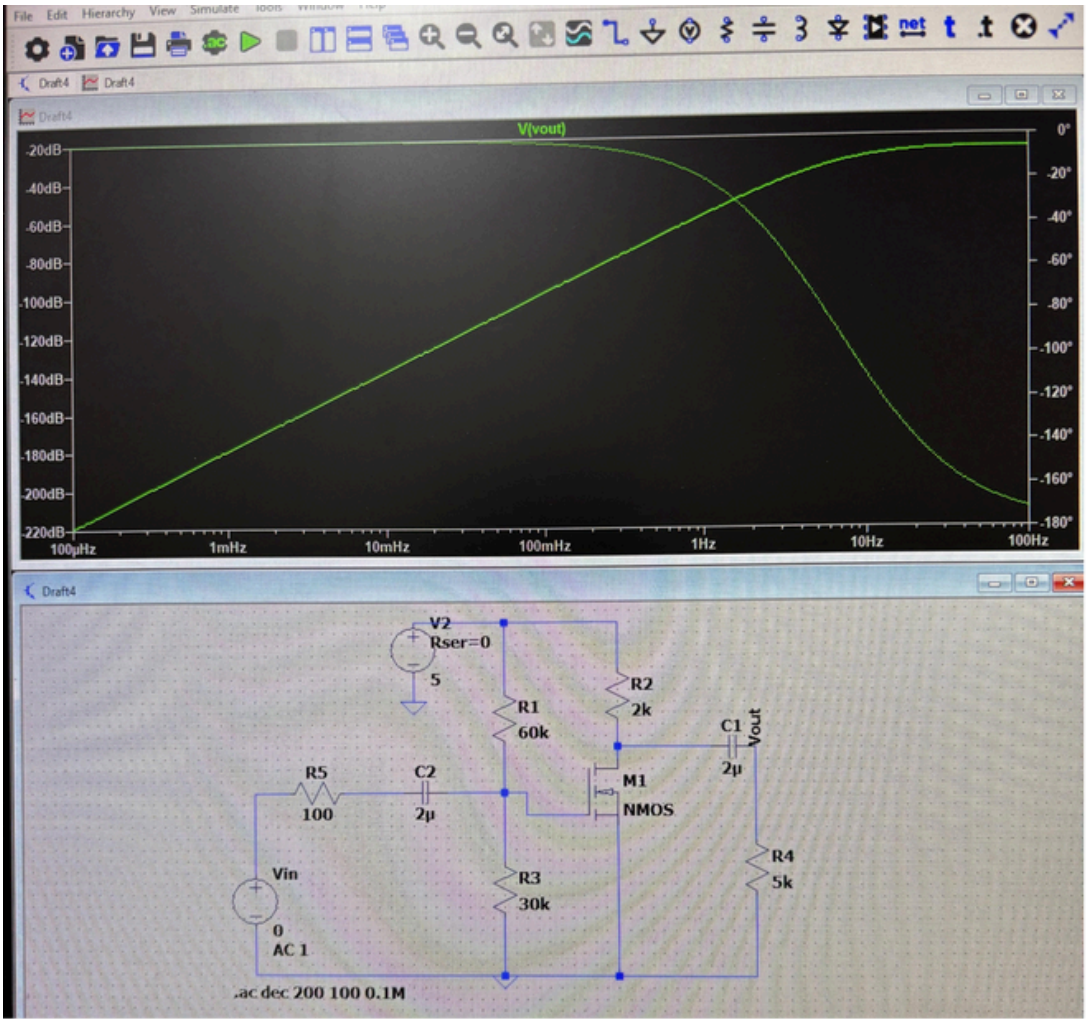
V(vout)
-20dB
-40dB
-60dB
-80dB
-100dB
-120dB
-140dB
-160dB
-180dB
-200dB
-220dB
0°
-20°
-40°
-60°
-80°
-100°
-120°
-140°
-160°
-180°
100µHz
1mHz
10mHz
100mHz
1Hz
10Hz
100Hz
V2
Rser=0
5
R1
60k
R2
2k
C1
2µ
Vout
R5
100
C2
2µ
M1
NMOS
R4
5k
Vin
R3
30k
0
AC 1
.ac dec 200 100 0.1M

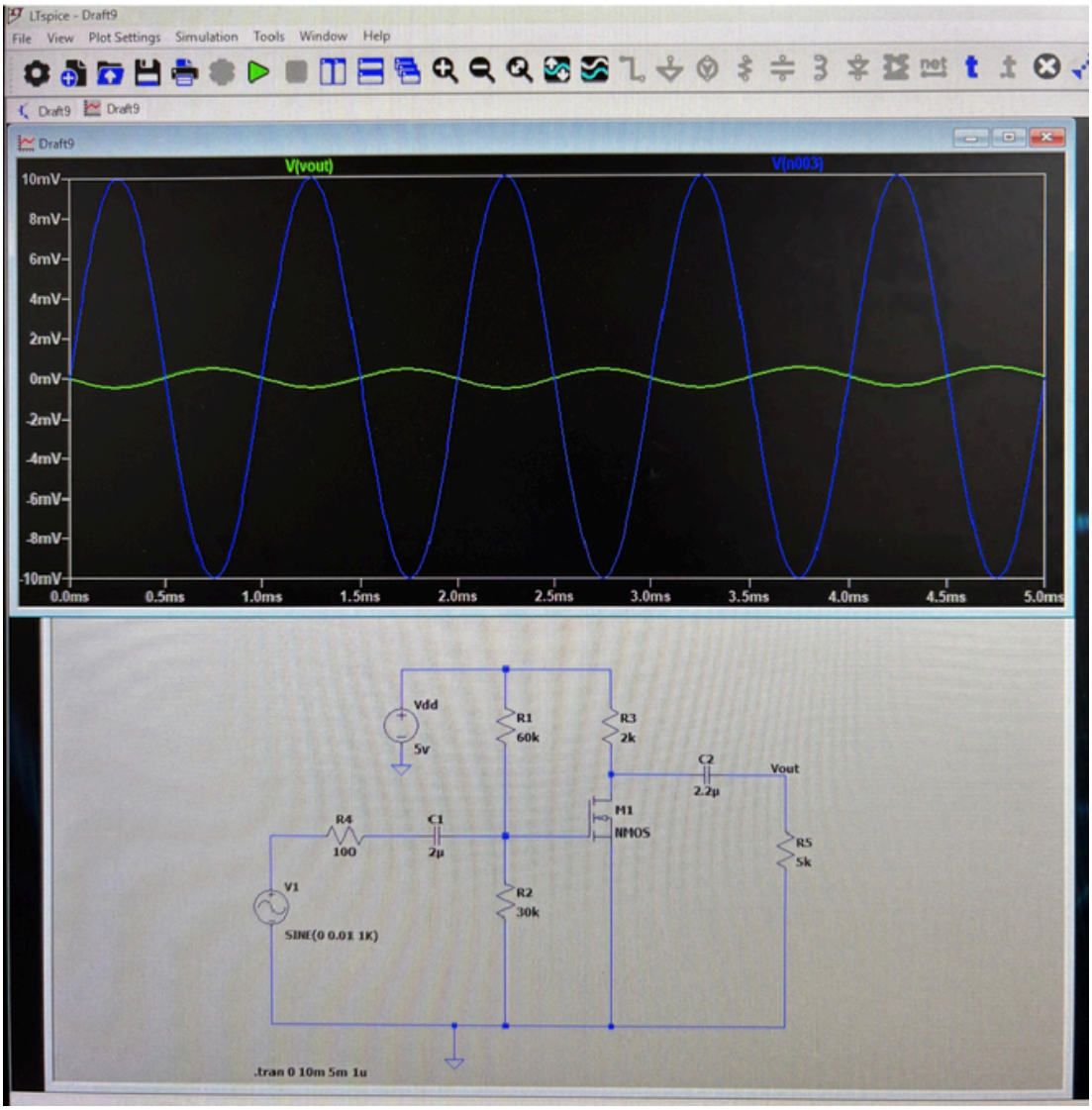
LTspice - Draft9
File View Plot Settings Simulation Tools Window Help
V(vout)
V(n003)
10mV
8mV
6mV
4mV
2mV
0mV
-2mV
-4mV
-6mV
-8mV
-10mV
0.0ms
0.5ms
1.0ms
1.5ms
2.0ms
2.5ms
3.0ms
3.5ms
4.0ms
4.5ms
5.0ms
Vdd
5V
R1
60k
R3
2k
C2
2.2µ
Vout
M1
NMOS
R4
100
C1
2µ
R5
5k
V1
R2
30k
SINE(0 0.01 1K)
.tran 0 10m 5m 1u

Experiment 4: Full Adder using MOS Transistors

Aim: To design full adder using MOS transistor and perform transient analysis in LTspice.

Apparatus Required:

- LTspice Software
- NMOS and PMOS transistors
- Voltage sources

Theory:

A full adder adds three binary inputs (A, B, Cin) and produces a sum and carry output. Using CMOS design, XOR, AND, and OR gates can be constructed using MOS transistors. Transient analysis is used to verify truth table of full adder operation.

Procedure:

1. Open LTspice and design XOR, AND, and OR gates using MOS transistors.
2. Connect them to form a full adder circuit.
3. Provide binary inputs A, B, Cin as pulse sources.
4. Run transient analysis to verify sum and carry outputs.
5. Compare with theoretical truth table.

Observation: Sum and Carry outputs followed the truth table for all input combinations.

Result: Full adder successfully designed and tested using MOS transistors in LTspice.