NETAJI SUBHAS UNIVERSITY OF TECHNOLOGY

PRACTICAL FILE

RF and Microwave Engineering

ECECC20

SUBMITTED TO:

Prof. D.K. UPADHYAY

SUBMITTED BY:

Prakhar Agarwal

2019UEC2688

INDEX

SNO	EXPERIMENTS	DATE
1.	Study of microwave components and Instruments	
2	Set up an experiment to study the mode characteristics of reflex klystron and to determine mode number, transit time, electronic tuning range (etr) and electronic tuning sensitivity.	
3	Set up an experiment to measure frequency, power and wavelength of Microwave signal.	
4	Set up an experiment to measure SWR and reflection coefficient.	
5	Set up and experiment to study the function of Magic Tee.	
6	Set up and experiment to study the function of Isolator and Circulator.	
7	Set up and experiment to study the function of Direction coupler.	
8	Simulate an air-filled WR-90 waveguide Using ANSYS HFSS as shown in Fig. 1 to obtain the field patterns, intrinsic Impedance and wavelength for the first 4 modes.	
9	Design and Tune the low pass filter using EM Simulator	
10	For the circuit shown below, determine the ABCD Matrix and then convert it to S-parameters. Plot the return loss and insertion loss over a frequency range of 0.1GHz to 2GHz using MATLAB	

EXPERIMENT-1

AIM:- Study of microwave components and Instruments

Apparatus Used:- Klystron power supply, Gunn power supply, VSWR meter, power meter, Slotted section, Frequency/wave meter, RF Generator, Vector Network Analyzer

Theory:

1. Rectangular Waveguide: Wave guides are manufactured to the highest mechanical and electrical standards and mechanical tolerances. L and S band wave guides are fabricated by precision brazing of brass-plates and all other wave guides are in extrusion quality. Waveguide sections of specified length can be supplied with flanges, painted outside and silver or gold plated in side.

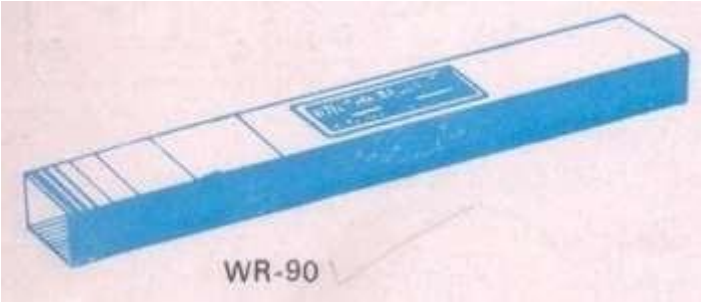

2. Klystron Power Supply: Klystron Power supply is a regulated power supply for operating low power klystron. Klystron power supply generates voltage required for driving the reflex klystron tubes like 2k25, 2k56, 2k22. It is absolutely stable, regulated and short circuit protected power supply. It has the facility to vary the Beam Voltage continuously and built in facility of square wave and saw tooth generators, for amplitude and frequency modulation.

3. Reflex Klystron (Klystron mount with tube) : A waveguide of suitable length having octal base on the broad wall of the waveguide for mounting the klystron tube. It consists of movable short at one end of the waveguide to direct the microwave energy generated by the klystron tube. A small hole located exactly at the center of the broad wall of the waveguide is used to put the coupling pin of the tube as the electric field vector of EM energy is maximum at the center only. The maximum power transfer can be achieved by tuning of the movable plunger.

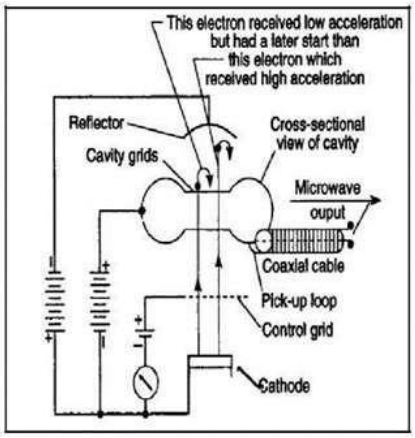

4. Isolator: The microwave test bench includes an attenuator, and an isolator. Both of these help to stop the reflected power from reaching the oscillator and pulling the frequency of the cavity and Gunn diode off tune when the load impedance is varied. An isolator is a two port device that transmits microwave or radio frequency power in one direction only. It is used to shield equipment on its input side, from the effects of conditions on its output side; for example, to prevent a microwave source being detuned by a mismatched load. An ideal isolator transmits all the power entering port 1 to port 2, while absorbing all the power entering port 2. An isolator in a non-reciprocal device, with a non-symmetric matrix.

5. Circulator: A circulator is a passive non-reciprocal three port device in which microwave or radiofrequency power entering any port is transmitted to the next port in rotation only. Model 6021 and 6022 are T and Y types of three port circulators respectively. These are precisely machined and assembled to get the desired specifications.

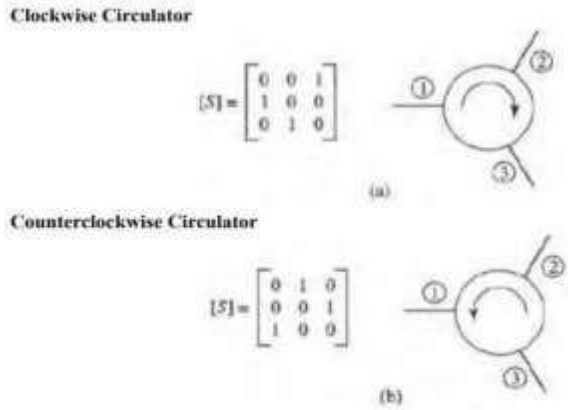

6. Attenuator: Attenuators are required to adjust the power flowing in a waveguide. Attenuators are of fixed, variable and rotary vane type, i.e. Fixed: Any amount of fixed attenuation can be supplied between 3 to 40 dB. These attenuators are calibrated frequency band. Variable: Variable attenuators provide a convenient means of adjusting power level very accurately.

7. Direct reading frequency meter: This Frequency Meter has convenient readout with high resolution is provided by long spiral dials. These dials have all frequency calibrations visible so you can tell at a glance the specific portion of each band you are measuring. Overall accuracy of these frequency meters is 0.17% and includes such variables as dial calibration. It is constructed from a cylindrical cavity resonator with a variable short circuit termination. The shorting plunger is used to change the resonance frequency of the cavity by changing the cavity length. DRF measures the frequency directly. It is particularly useful when measuring frequency

differences of small changes. The cylindrical cavity forms a resonator that produces a suck-out in the frequency response of the unit. This you would turn the knob until a dip in the response is observed.

8. Slotted line section with probe carriage: The slotted line represented the basic instrument of microwave measurements. With its help it is possible to determine the VSWR, attenuation, phase and impedances. The position of carriage (probe) can be read from a scale with its vernier. The total travel of probe carriage is more than three time of half of guide wavelength. This system consists of a transmission line (waveguide), a traveling probe carriage and facility for attaching/detecting instruments. The slot made in the center of the broad face do not radiate for any power of dominant mode. The precision built probe carriage having centimeter scale with a vernier reading of 0.1 mm least count is used to note the position of the probe. Additionally slotted section can be used to measure reflection coefficient and the return loss.

9. Crystal Detector: The crystal detector (Detector mount) can be used for the detection of microwave signal. RF choke is built into the crystal mounting to reduce leakage from BNC connector. Square law characteristics may be used with a high

gain selective amplifier having a square law meter calibration. At low level of microwave power, the response of each detector approximate to square law characteristics and may be used with a high gain selective amplifier having a square law meter calibration.

10. VSWR Meter: The SWR meter or VSWR (voltage standing wave ratio) meter measures the standing wave ratio in a transmission line. The meter can be used to indicate the degree of mismatch between a transmission line and its load (usually a radio antenna), or evaluate the effectiveness of impedance matching efforts.

11. Klystron Mount: Model 2051 Klystron mounts are meant for mounting corresponding Klystrons such as 2K25, 723A/B, 726A or RK - 5976 etc.
These consists of a section of wave guide flanged on one end and terminated with a movable short on the other end. An octal base with cable is provided for Klystron.

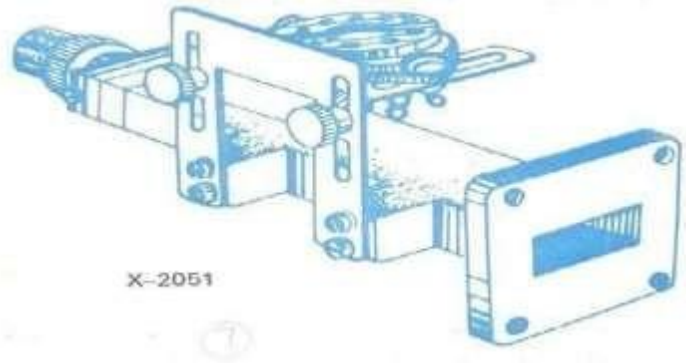

12. E-Plane Tee: Model 3061 E - plane tee are series type T - junction and consists of three section of wave guide joined together in order to divide or compare power levels. The signal entering the first port of this T - junction will be equally dividing at second and third ports of the same magnitude but in opp. Phase

13. H-Plane Tee: Model 3065 H - Plane Tee are shunt type T - junction for use in conjunction with VSWR meters, frequency - meters and other detector devices. Like in E-plane tee, the signal fed through first port of H - plane Tee will be equally divided in magnitude at second and third ports but in same phase.

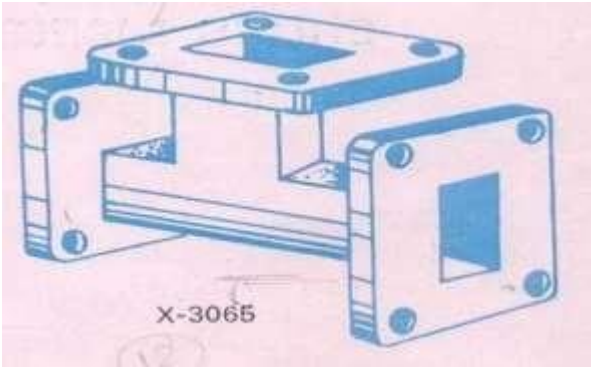

14. Magic Tee: Model 3045 E - H Tee consists of a section of wave guide in both series and shunt wave guide arms, mounted at the exact midpoint of main arm. Both ends of the section of wave guide and both arms are flanged on their ends. These Tees are employed in balanced mixers, AFC circuits and impedance measurement circuits etc. This becomes a four terminal device where one terminal is isolated from the input terminal.

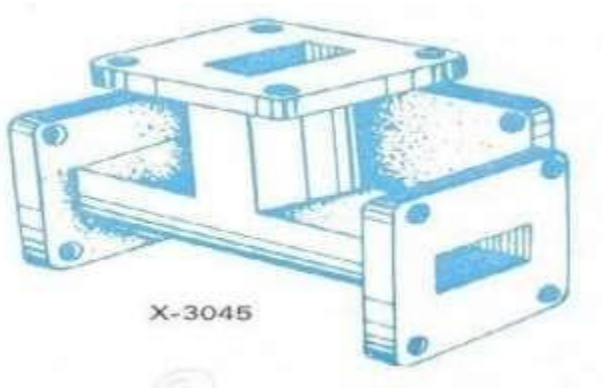

RESULT:-

Thus all the microwave components were studied in detail.

EXPERIMENT 2

AIM:-Set up an experiment to study the mode characteristics of reflex klystron and to determine mode number, transit time, electronic tuning range (etr) and electronic tuning sensitivity.

APPARATUS REQUIRED:- Klystron power supply, klystron with mount, isolator, frequency meter, variable attenuator, slotted section with probe carriage, CRO, movable short.

THEORY:-

Klystron is a microwave vacuum tube employing velocity modulation. These electrons move towards the repeller (ie) the electrons leaving the cavity during the positive half cycle are accelerated while those during negative half cycle are decelerated. the faster ones penetrate further while slower ones penetrate lesser in the field of repeller voltage. but, faster electrons leaving the cavity take longer time to return and hence catch up with slower ones. in the cavity the electrons bunch and interact with the voltage between the cavity grids.

It consists of an electron gun producing a collimated electron beam. It bunches pass through grids at times the grid potential is such that electrons are decelerated they give by energy. the electrons are then collected by a positive cavity wall near the cathode. to protect repeller from damage, repeller voltage is applied before accelerating voltage.

CALCULATION:-

Knowing mode top voltages of two adjacent modes, mode numbers of the modes is computed from the equation,

$$n2/n1 = v1/v2 = [(n + 1) + 3/4]/[n + 3/4]$$

where v1 and v2 are the values of repeller voltages required to operate the klystron in mode numbers n1 and n2.

Knowing mode number, transit time of each mode is calculated from

t1 = [n + 3/4]/f01 = n1/f01

f01 → frequency of microwave operation in one mode.

etr – electronic tuning range i.e, the frequency band from one end of the mode to another is calculated by

etr = f1max – f1min for n1 mode (ghz)

f1max – f1min → half power frequencies

ets – electronic tuning sensitivity

ets = (f1max - f1min)/(v1max - v1min)

v1max – v1min → half power frequency

v1max, v1min → corresponding repeller voltages for a particular mode.

OBSERVATION:-

Mode	Frequency (ghz)	Repeller voltage (v)	Output voltage (mv)
1	9.84	140	50
	9.85	150	325
	9.85	160	275
2	9.895	110	100
	9.87	1000	300
	9.85	90	175

RESULT:-Characteristics of reflex klystron were studied and mode number, transit time, electronic tuning range (etr) and electronic tuning sensitivity were determined.

EXPERIMENT 3

AIM:- Set up an experiment to measure frequency, power and wavelength of microwave signal.

APPARATUS REQUIRED:- Klystron tube 2k25,klystron power supply 5kps-610,klystron mount , XM- 251,isolator Xl-621, Frequency meter X F710, Variable attenuator, Slotted section Xs-651, Tunable Probe Xp-655, VSWR Meter SW-115, Waveguide Stand, Movable short XT-481, Matched Termination XL-400

THEORY:-

For dominant TE10 mode

$1/\lambda b^2 = 1/\lambda g^2 + 1/\lambda c^2$

where λb is the free-space wavelength, λg is the wavelength of the radio waves in the guiding medium (such as a waveguide or coaxial cable), and λc is the cutoff wavelength of the guiding medium.

For TE10 mode Ia=2a where a is broad dimension of waveguide.

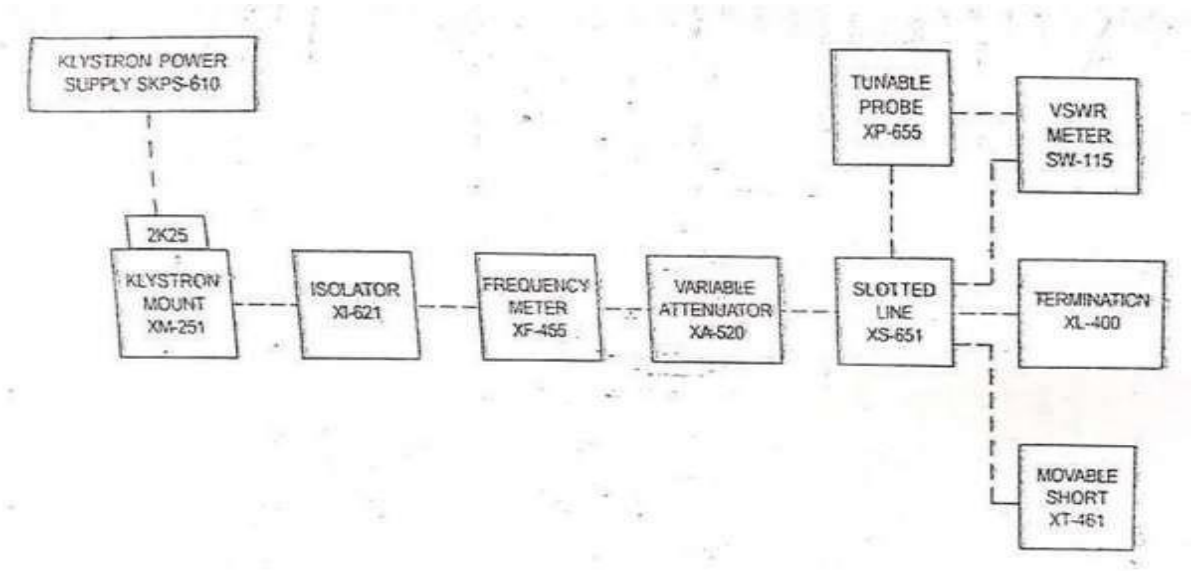

OBSERVATIONS:

a=2.286cm, λ_c=2a=4.572cm

S.No	Repelle r Voltage(V)	Frequency(f) (GH z)	$\lambda_G = 2(d_2 \sim d_1)$	$f = C/\lambda = \sqrt{\frac{1}{\lambda_g^2} + \frac{1}{\lambda_c}}$ (GHz)
1	-106	11.5	2*1.87=3.74	10.3GHz
2	-5	11.1	2*2.33=4.66	9.2GHz

RESULT:-

Frequency, power and wavelength of microwave signal were determined.

EXPERIMENT - 4

AIM: Set up an experiment to measure SWR and reflection coefficient.

APPARATUS: Klystron Power supply, klystron mount isolator, frequency meter, variable attenuator, slotted section, tunable probe, VSWR meter, Waveguide stand, movable short/matched termination.

THEORY:

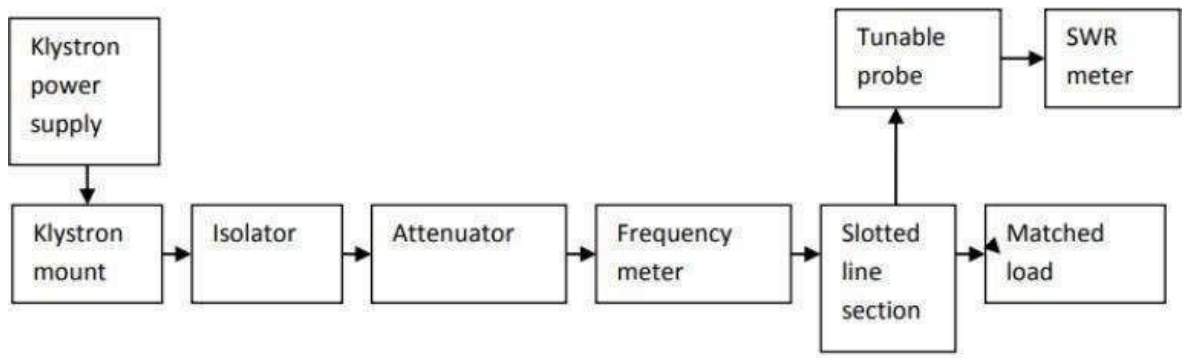

Fig 1.Set up for frequency and wavelength measurement.

TERMINOLOGIES USED

Reflection Coefficient :

$$\Gamma = (VSWR - 1)/(VSWR + 1)$$

VSWR = 1+|Γ|/1-|Γ|

Return Loss : |Γ|^2

Mismatch Loss(mi) : -log(1-|Γ|^2)

Reflected Power (Pr): 100 * |Γ|^2

Forward Power(Pf) : 100 [1-|Γ|^2]

Range of VSWR = 1 to ∞

Range of Reflection Coefficient = 0 to 1

VSWR Meter :

Slotted Line :

OBSERVATION TABLE:

SNO:	Slotted line reading	VSWR	Γ	Pf	Pr	mi
1	9	1.43	0.177	3.13%	96.87%	0.013
2	9.5	2.1	0.359	12.88%	87.12%	0.059
3	**10**	**1.09**	**0.043**	**0.18%**	**99.82%**	**0.007**
4	10.5	1.7	0.259	6.7%	93.3%	0.03
5	11	1.4	0.166	2.75%	97.25%	0.012
6	11.5	1.5	0.2	4%	96%	0.017

RESULT :

VSWR = 1.09

Γ = 0.043

VSWR and reflection has been calculated from the following calculations for maximum power delivery and minimum mismatch loss.

EXPERIMENT - 5

AIM: Set up and experiment to study the function of magic tee.

APPARATUS: Klystron Power supply, klystron mount isolator, frequency meter, variable attenuator, slotted section, tunable probe, VSWR meter, Waveguide stand, movable short/matched termination, magic tee.

THEORY:

The device magic tee is a combination of e and h plane tee. Arm-3 is the h arm and arm-4 is the e-arm. If the power is fed into arm-3, the electric field is divided equally between arm-1 and arm-2 with the same phase and no electric field exists in arm-4. If power is filled in arm-4, it divides equally into arm-1 and arm-2, but out of phase with no power to arm-3. Further if the power is fed in arm-1 and arm-2 simultaneously it is subtract it in e arm that is arm-4.

The basic parameters to be measured for magic tee are defined below -

Input VSWR: Value of swr corresponding to each port as a load to the line while other ports are terminated in matched load.

Isolation: The isolation between e & h arm is defined as the ratio of the power supplied by the generator connected to e arm to the power detected at h arm when sidearms 1 and 2 terminated in match load

Hence isolation (db)= 10log10[p4/p3]

Similarly, isolation between other parts may also be defined.

Coupling factor:

it is defined as Cij = 10-α/20 where α is attenuation/isolation in db when i is input arm and j is output arm

thus α = 10log10[p4/p3]

where p3 is the power delivered to arm 1 and p4 is the power detected at j arm.

OBSERVATION TABLE

S.no	VSWR (initial)	VSWR (final)	ISOLATION	COUPLING COEFF.
1	1200	27	32.97	0.0225
	1200	700	4.68	0.58
	1200	600	6.02	0.5
2	1200	24	33.97	0.02
	1200	640	5.46	0.533
	1200	600	6.03	0.511

RESULT:

Characteristics of magic tee was studied and vswr and coupling coefficients were calculated.

EXPERIMENT - 6

AIM: Set up and experiment to study the function of Isolator and circulator.

APPARATUS: Klystron Power supply, klystron mount isolator, frequency meter, variable attenuator, slotted section, tunable probe, VSWR meter, Waveguide stand, movable short/matched termination, isolator,circulator.

THEORY :

ISOLATOR

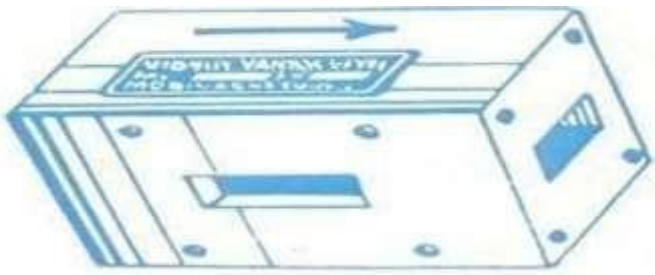

X-6021

The three port circulators Model 6021 may be converted into isolators by terminating one of its port into matched load. these will work over the frequency range of circulators. These are well matched devices offering low forward insertion loss and high reverse isolation.

Model No. : X - 6022

Frequency Range (GHz) : 8.6 - 10.6 or 10.2 - 12.2
Min Isolation (dB) : 20
Max Insertion Loss (dB) : 0.4
Max VSWR : 1.20

OBSERVATION TABLE:

Port	VSWR	$P_{forward}$	$P_{reflected}$	Return Loss	Mismatch Loss
1	1.89	91%	9%	10.45dB	0.4dB
2	1.5	96%	4%	13.97dB	0.01dB

CALCULATIONS:

$$S_{11} = VSWR_1 - 1/VSWR_1 + 1$$

$$1.89 - 1/1.89 + 1 = 0.3$$

$$S_{22} = VSWR_2 - 1/VSWR_2 + 1$$

$$1.5 - 1/1.5 + 1 = 0.2$$

$$S_{12} = P_o/P_i = 0.09/0.91 = 0.1$$

$$S_{21} = P_i/P_o = 0.91/0.09 = 10.1$$

Thus, the scattering matrix is calculated to be

S=

$$\begin{bmatrix} 0.3 & 0.1 \\ 10.1 & 0.2 \end{bmatrix}$$

CIRCULATOR

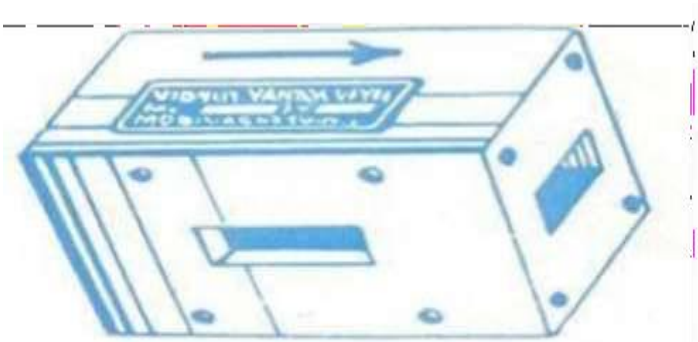

X-6021

X-6022

Model 6021 and 6022 are T and Y types of three port circulators respectively. These are precisely machined and assembled to get the desired specifications. Circulators are matched three port devices and these are meant for allowing Microwave energy to flow in clockwise direction with negligible loss but almost no transmission in the anti-clockwise direction.

Model No. : X - 6021

Frequency Range (Ghz) : 8.6 - 10.6 or 10.2 - 12.2

Min. Isolation (dB) : 20

Max. Insertion Loss (dB) : 0.4 Max.

VSWR : 1.20

OBSERVATION TABLE:

Sno	Frequency(GHz)	P1	P2	P3	Insertion loss(Db)	Isolation loss(dB)
1	11.5	45	48	60	3	15
2	11	40	43	57	3	17

RESULT:

Characteristics of isolator and circulator were studied.

EXPERIMENT- 7

AIM: Set up an experiment to study the functions of Directional coupler.

APPARATUS:

Klystron tube 2k25,klystron power supply 5kps-610, Klystron mount, Directional Coupler, XM-251,Frequency meter X F710, Variable Attenuator, Slotted section Xs-651, Tunable Probe Xp-655, VSWR Meter SW-115, Waveguide Stand, Movable short XT-481, Matched Termination XL-400.

THEORY:

Directional Coupler is a four-port waveguide junction as shown in Figure.

Multi-hole Directional Coupler

The characteristics of Directional coupler can be expressed in terms of its coupling factor and directivity.

Coupling Factor: The coupling factor of a directional coupler is the ratio of incident power to the forward power, measured in dB.

$$C = 10\, log_{10} \frac{P_i}{P_f} dB$$

Directivity: The Directivity of a Directional coupler is the ratio of forward power to the back power, measured in dB.

$$D = 10\, log_{10} \frac{P_f}{P_b} dB$$

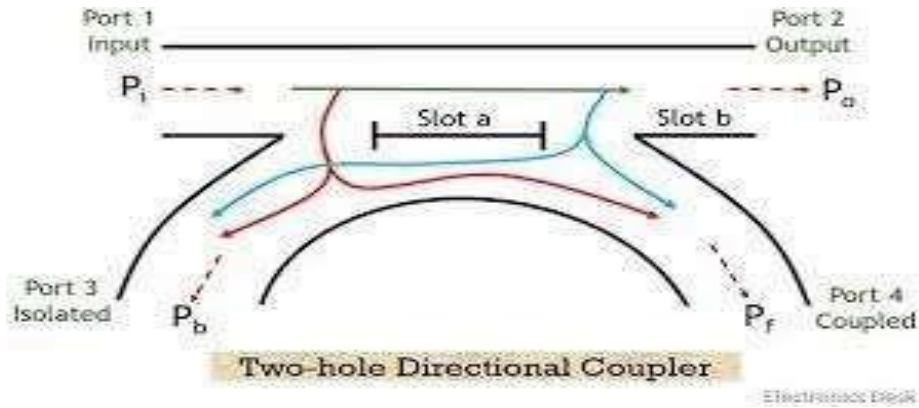

Two Hole Directional Coupler

S-Matrix of Directional Coupler:

a) In a directional coupler all four ports are completely matched. Thus the diagonal elements of the S matrix are zeroes.

$$S_{11} = S_{22} = S_{33} = S_{44} = 0$$

b) There is no coupling between port 1 and port 3 and between port 2 and port 4. So

$$S_{13} = S_{31} = S_{24} = S_{42} = 0$$

Consequently, the S matrix of directional coupler becomes:

$$\mathbf{S} = \begin{bmatrix} 0 & S_{12} & 0 & S_{14} \\ S_{21} & 0 & S_{23} & 0 \\ 0 & S_{32} & 0 & S_{34} \\ S_{41} & 0 & S_{43} & 0 \end{bmatrix}$$

RESULT:

Functions of directional coupler were studied.

EXPERIMENT 8

AIM:-Simulate an air-filled WR-90 waveguide Using ANSYS HFSS as shown in Fig. 1 to obtain the field patterns, intrinsic Impedance and wavelength for the first 4 modes.

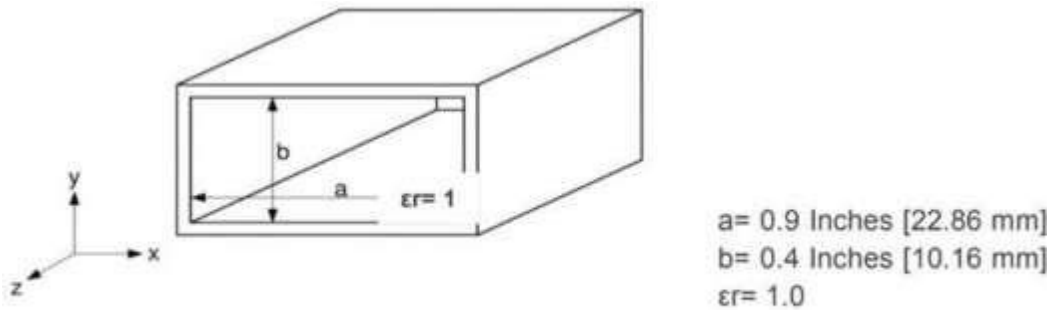

Fig.1 WR-90 Waveguide

SOFTWARE REQUIRED:- ANSYS HFSS

PROCEDURE:-

1) Launch ANSYS HFSS and create a new project.

2) Create a new design and specify the frequency range as 8.2 GHz to 12.4 GHz, which corresponds to the operating frequency range of the WR-90 waveguide.

3) Create a new waveguide structure by selecting "Insert" from the main menu and then selecting "Waveguide" and "WR-90" from the dropdown menu.

4) Set the boundary conditions for the waveguide by selecting "Boundaries" from the main menu and then selecting "Waveport". In the "Waveport Excitation" dialog box, select "TE10" as the mode and set the excitation amplitude to 1 V.

5) Define the mesh settings by selecting "Mesh Operations" from the main menu and then selecting "Mesh". In the "Mesh" dialog box, select "Fast" as the meshing option and set the maximum mesh size to 1/20th of the wavelength at the lowest frequency of the frequency range.

6) Run the simulation by selecting "Solve" from the main menu and then selecting "Setup". In the "Setup" dialog box, select "Driven Modal" as the solution type and set the number of modes to 4.

7) Analyze the results by selecting "Results" from the main menu and then selecting "Fields" and "Vector Fields". In the "Vector Fields" dialog box, select "E Field" and "z" component to obtain the field patterns.

8)Calculate the intrinsic impedance by selecting "Results" from the main menu and then selecting "Parameters". In the "Parameters" dialog box, select "Z0" to obtain the intrinsic impedance for each mode.

9)Calculate the wavelength for each mode by selecting "Results" from the main menu and then selecting "Fields" and "Vector Fields". In the "Vector Fields" dialog box, select "E Field" and "x" component. Then, select "Calculate Wavelength" from the dropdown menu to obtain the wavelength for each mode.

OBSERVATIONS:-

Impedance vs. Frequency for the first four modes

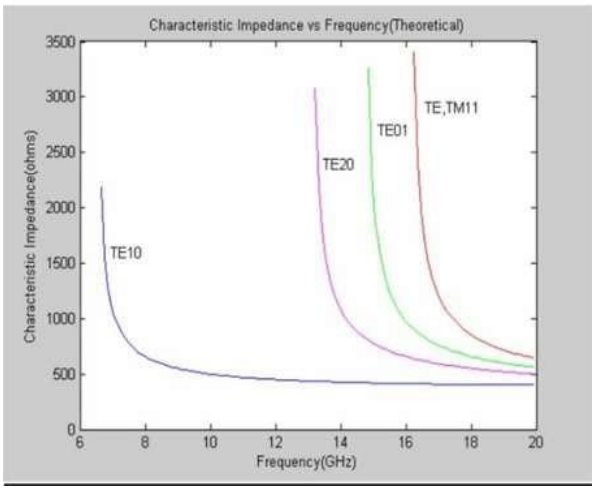

Plot of propagation constant vs. frequency for the first four modes using Theoretical values

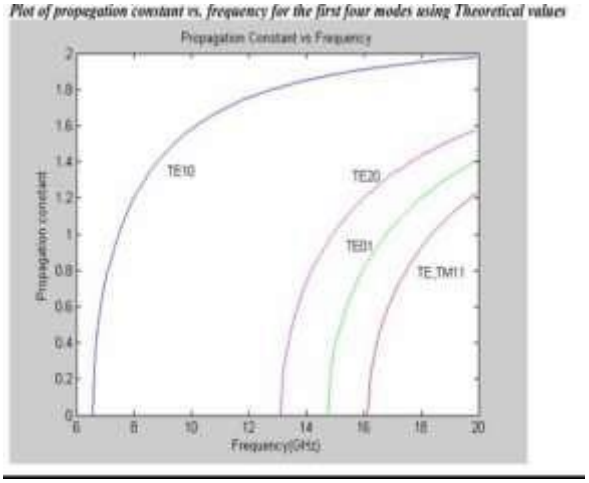

Wavelength vs. frequency for the first four modes

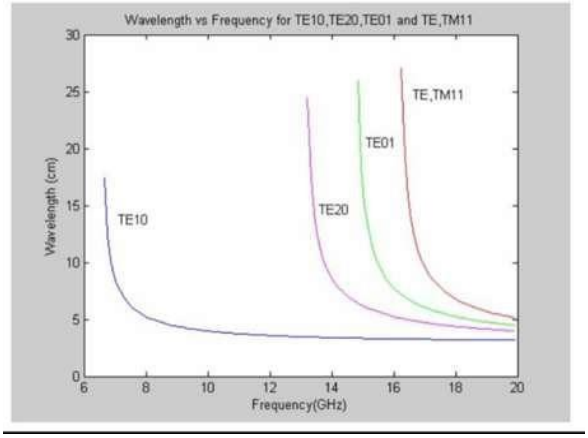

TE10 MODE:

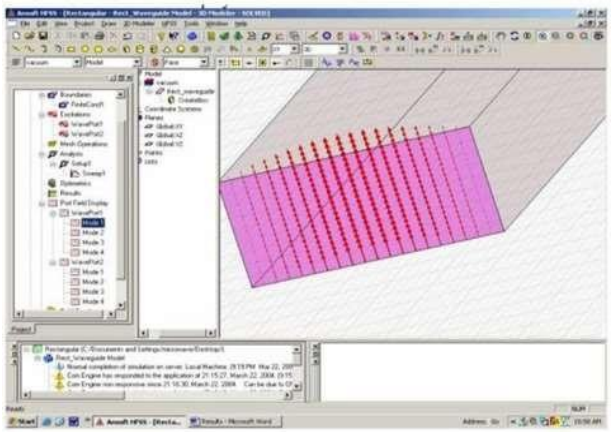

TE20

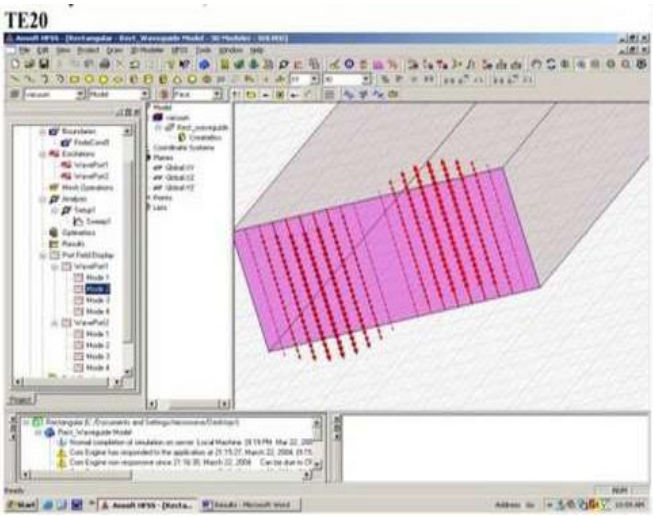

TE01

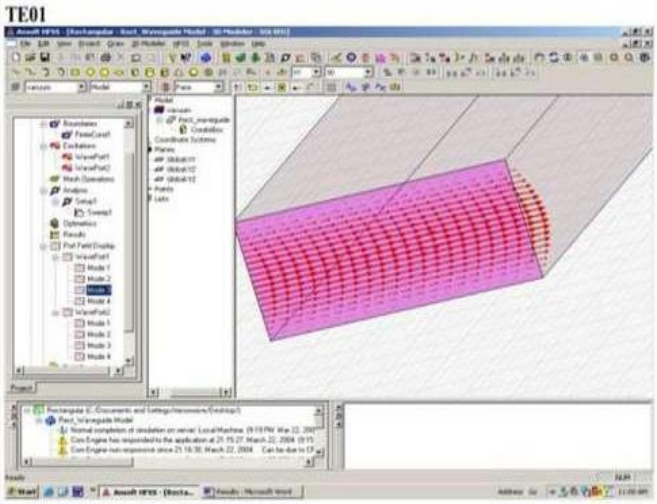

TE,TM11

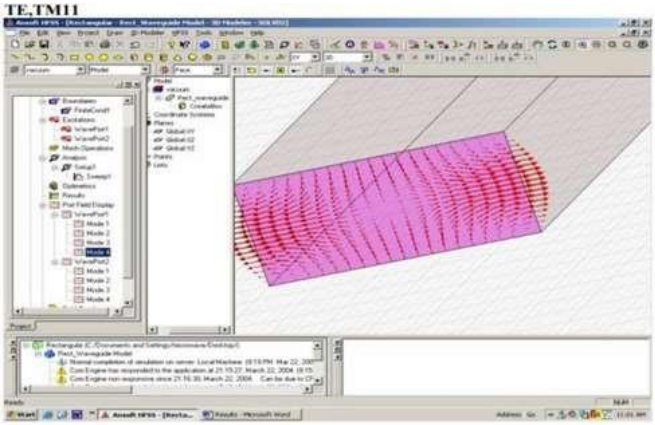

E field pattern in [v/m]

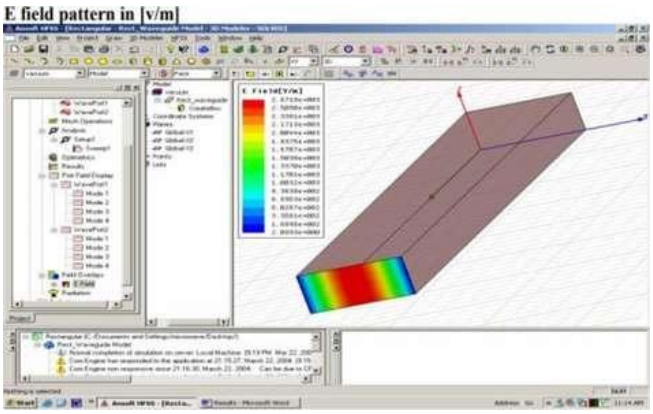

RESULT:

An air-filled WR-90 waveguide has been designed successfully using ANSYS HFSS.

EXPERIMENT 9

AIM:- Design and Tune the low pass filter using EM Simulator.

SOFTWARE REQUIRED:- ADS (advanced design system).

THEORY:

A low-pass filter is an electronic circuit that allows low-frequency signals to pass through while attenuating high-frequency signals. The filter's cutoff frequency determines the point where the attenuation begins. The EM simulator is a software tool that allows the user to simulate and optimize the performance of electromagnetic components and systems.

PROCEDURE:-

1) Define the geometry of the filter: Decide on the shape and dimensions of the filter. You can start with a basic rectangular waveguide filter and modify it as needed.
2) Choose the type of filter: There are different types of low pass filters such as lumped element, waveguide, microstrip, etc. Choose a type that best fits your application.
3) Define the filter specifications: Decide on the cut-off frequency and the desired attenuation level. 4)Set up the simulation: Input the geometry, material properties, and boundary conditions into the simulation tool. Run the simulation:
5) Run the simulation and check for any errors or convergence issues.
6) Analyze the results: Analyze the S-parameters and other output parameters todetermine if the filter meets the specifications.
7)Tune the filter: If the filter does not meet the specifications, adjust the dimensions, material properties, or topology of the filter and rerun the simulation.
8) Optimize the filter: Once the filter meets the specifications, use optimization techniques such as parametric sweeps or genetic algorithms to fine-tune the filter's performance.

OBSERVATIONS:-

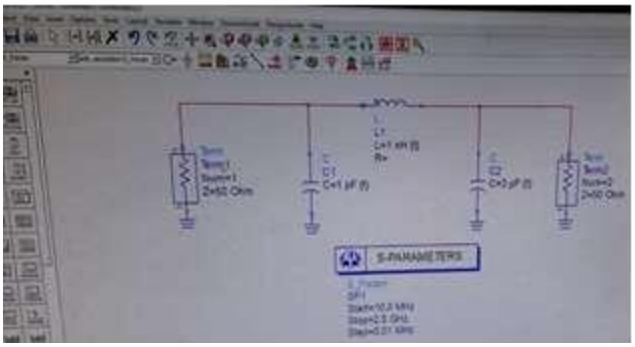

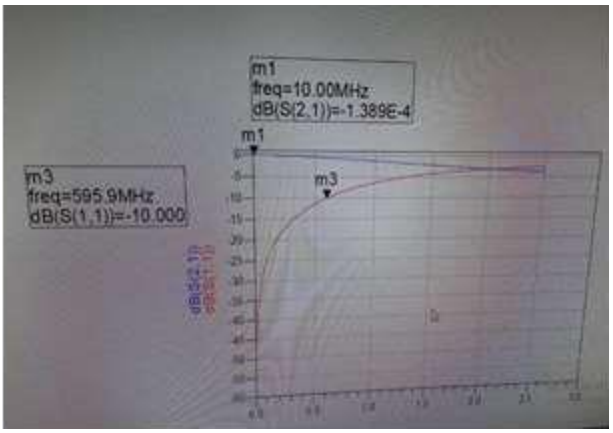

RESULT:

LPF has been designed and tuned successfully.

EXPERIMENT 10

AIM:-For the circuit shown below, determine the ABCD Matrix and then convert it to S-parameters. Plot the return loss and insertion loss over a frequency range of 0.1GHz to 2GHz using MATLAB

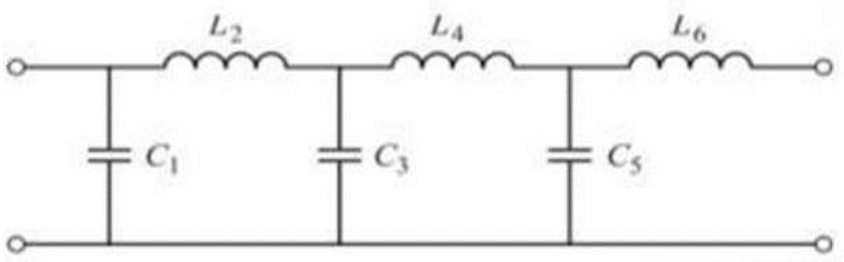

$L_2 = L_4 = L_6 = 9.78nH$
$C_1 = C_5 = 5.43pF$
$C_3 = 3.09pF$

SOFTWARE REQUIRED:- MATLAB

THEORY:-

$$S_{21} = \frac{2}{A + \frac{B}{Z_0} + CZ_0 + D} \qquad S_{11} = \frac{A + \frac{B}{Z_0} - CZ_0 - D}{A + \frac{B}{Z_0} + CZ_0 + D}$$

$$\begin{bmatrix} A & B \\ C & D \end{bmatrix} = \begin{bmatrix} 1 & Z \\ 0 & 1 \end{bmatrix} \Rightarrow$$

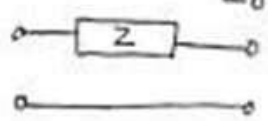

$$\begin{bmatrix} A & B \\ C & D \end{bmatrix} = \begin{bmatrix} 1 & 0 \\ Y & 1 \end{bmatrix} \Rightarrow$$

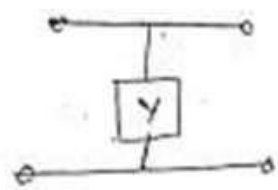

T matrix of a cascade of network is the product of T matrix of each network. Therefore ,T matrix is found for any network and they are then converted to S matrix using the above formulas.

Return loss = -20log(|S11|)

Insertion loss=-20log(|S21|)

MATLAB CODE:

```
L2=9.78.*(10.^(-9));
C1=5.43.*(10.^(-12));
C3=3.09.*(10.^(-12));
f=linspace(0.1,2);
len=length(f);
w=2.*pi.*f.*(10.^9);
s11=zeros(1,len);
s21=zeros(1,len);
Z0=50;
log10s21=zeros(1,len);
log10s11=zeros(1,len);
for i=1:
lenYc=complex(0,w(i)*C1);
Xl=complex(0,w(i)*L2);
Yc3=complex(0,w(i)*C3);
TC1=[1,0;Yc,1];
Tl1=[1,Xl;0,1];
TC3=[1,0;Yc3,1];
T=TC1*Tl1*TC3*Tl1*TC1*Tl1;
den=T(1,1)+(T(1,2)./Z0)+(T(2,1).*Z0)+T(2,2);
s21(i)=abs(2./den);
log10s21(i)=log10(s21(i));
s11(i)=abs((T(1,1)+(T(1,2)./Z0)-(T(2,1).*Z0)-T(2,2))./den);
log10s11(i)=log10(s11(i));
end figure();
plot(f,s21);
title("s21");
 figure();
plot(f,log10s21);
title("insertion loss");
figure();
plot(f,s11); title("s11")
figure();
plot(f,log10s11);
title("return loss");
```

OUTPUT:-

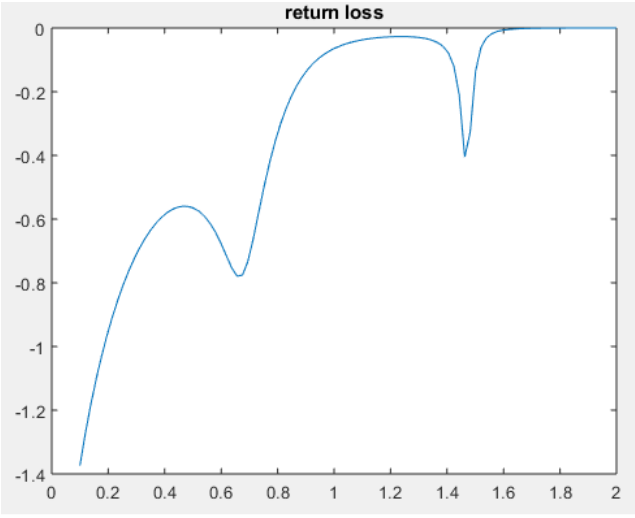
return loss
0
-0.2
-0.4
-0.6
-0.8
-1
-1.2
-1.4
0 0.2 0.4 0.6 0.8 1 1.2 1.4 1.6 1.8 2

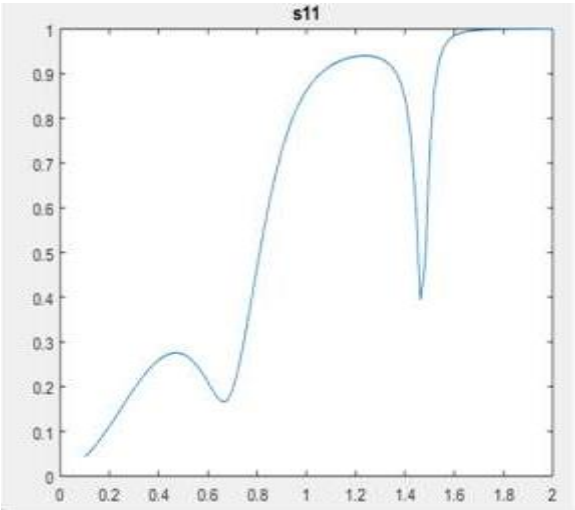
s11
1
0.9
0.8
0.7
0.6
0.5
0.4
0.3
0.2
0.1
0
0 0.2 0.4 0.6 0.8 1 1.2 1.4 1.6 1.8 2

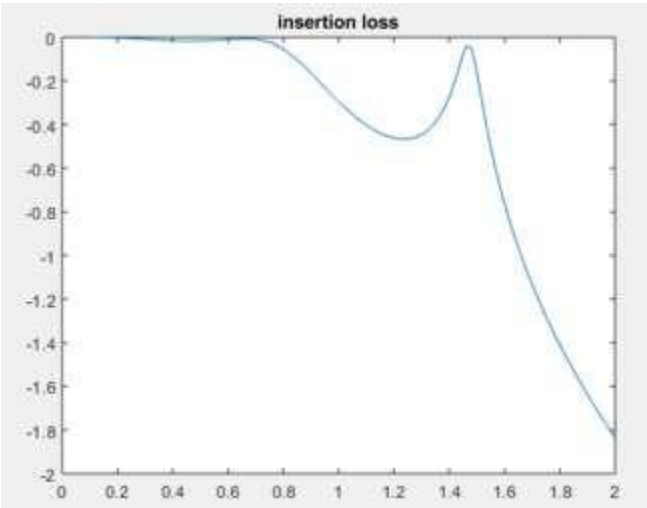
insertion loss
0
-0.2
-0.4
-0.6
-0.8
-1
-1.2
-1.4
-1.6
-1.8
-2
0 0.2 0.4 0.6 0.8 1 1.2 1.4 1.6 1.8 2

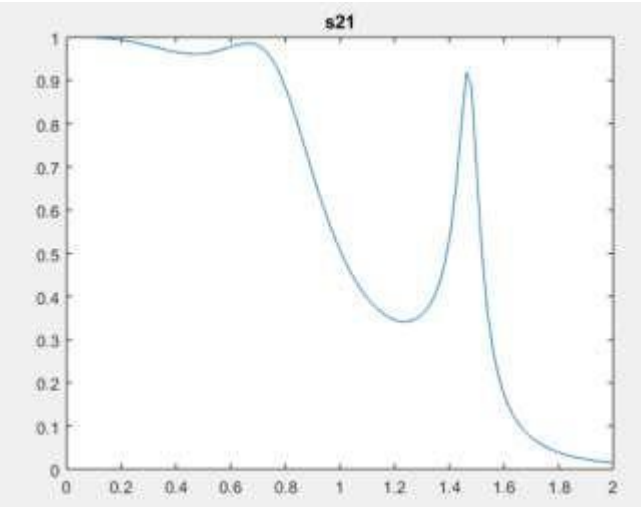
s21
1
0.9
0.8
0.7
0.6
0.5
0.4
0.3
0.2
0.1
0
0 0.2 0.4 0.6 0.8 1 1.2 1.4 1.6 1.8 2