Time Division Switching

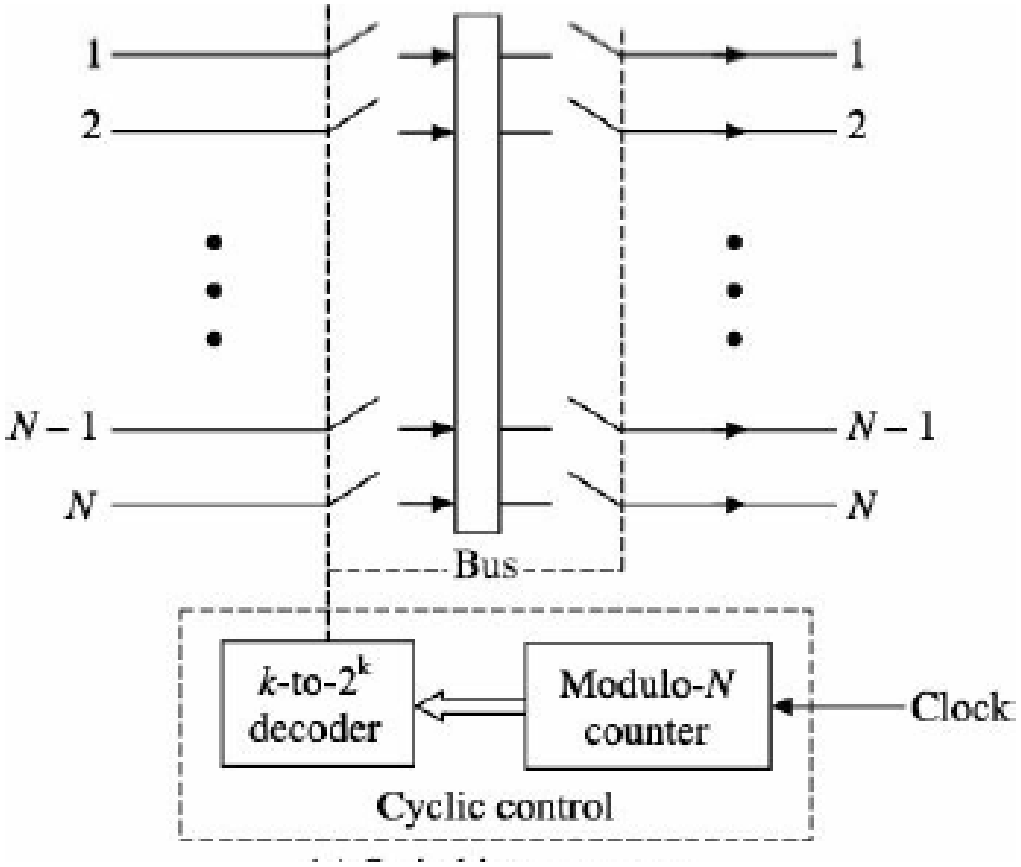

Time Division Space Switching-Input Controlled

- The input side is cyclically switched.
- There is a control memory on the output side which contains the addresses of the outlets stored in contiguous locations in the order in which they are to be connected to the inlets.
- For an active inlet *i*, the corresponding outlet address is contained in the *i*-th location of the control memory.
- It is read out and passed to the address decoder which also acts as the memory data register (MDR) of the control memory.
- For example, an address sequence 4−7−1−5 stored in locations 1, 2, 3, and 4 of the control memory implies that inlet 1 is connected to outlet 4, inlet 2 to outlet 7, inlet 3 to outlet 1 and so on in that order.
- This switch is said to be **input-controlled** or **input-driven** as the outlet is chosen depending on the inlet that is being scanned at any instant.
- Control memory has *N* words corresponding to *N* inlets and has a width of [log2 *N*] bits which are used to address the *N* outlets. Cyclic control at the input implies that all the subscriber lines are scanned irrespective of whether they are active or not.
- Thus, any inlet *i* can be connected to any outlet *k* ensuring full availability.

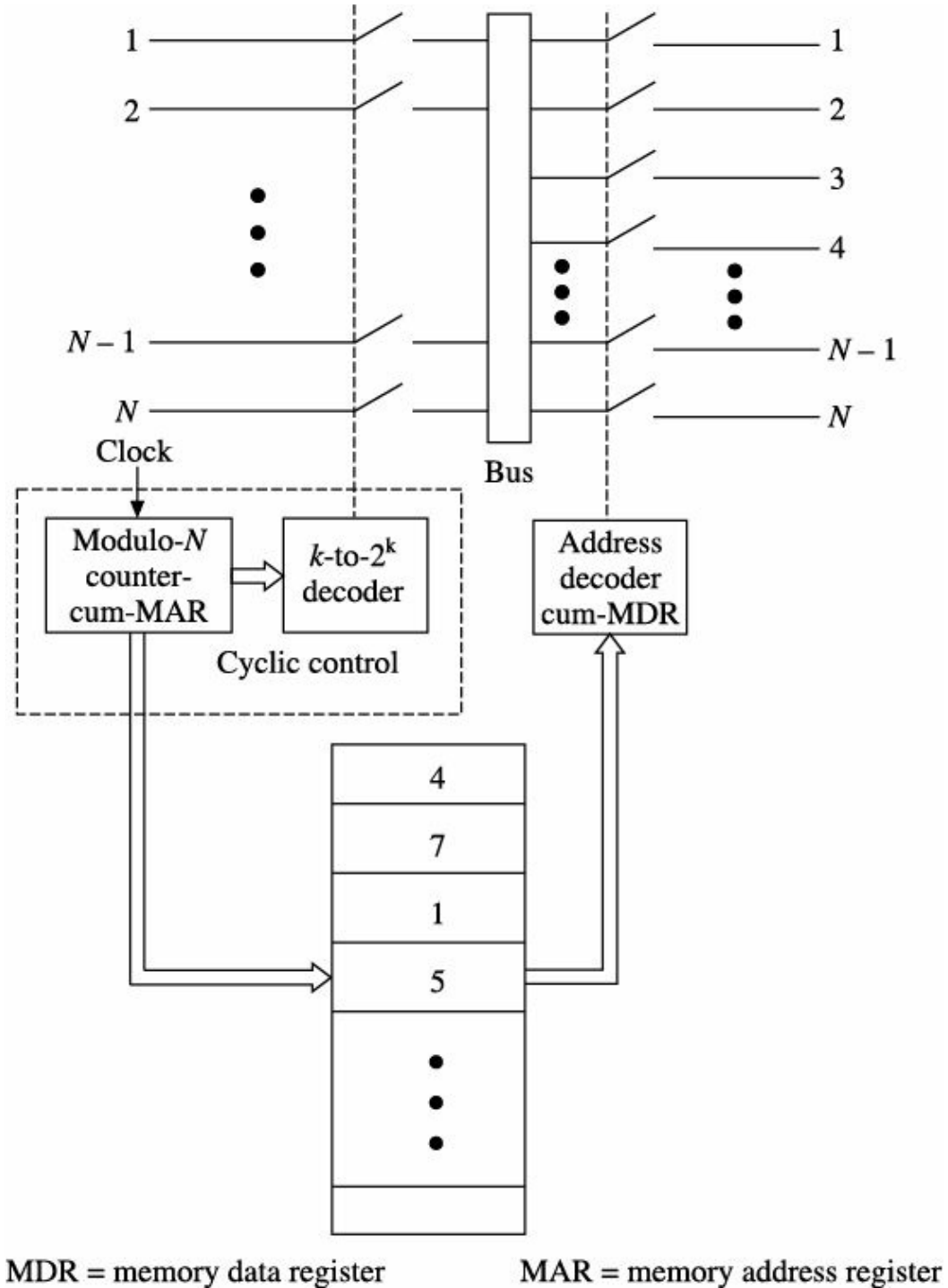

Time Division Space Switching-Output Controlled

- The output-controlled switches are capable of supporting broadcast connections, whereas the input-controlled ones are not.
- Broadcast takes place when all the control memory locations contain the same inlet address, in which case, the data from the specified inlet is transferred to all the outlets.

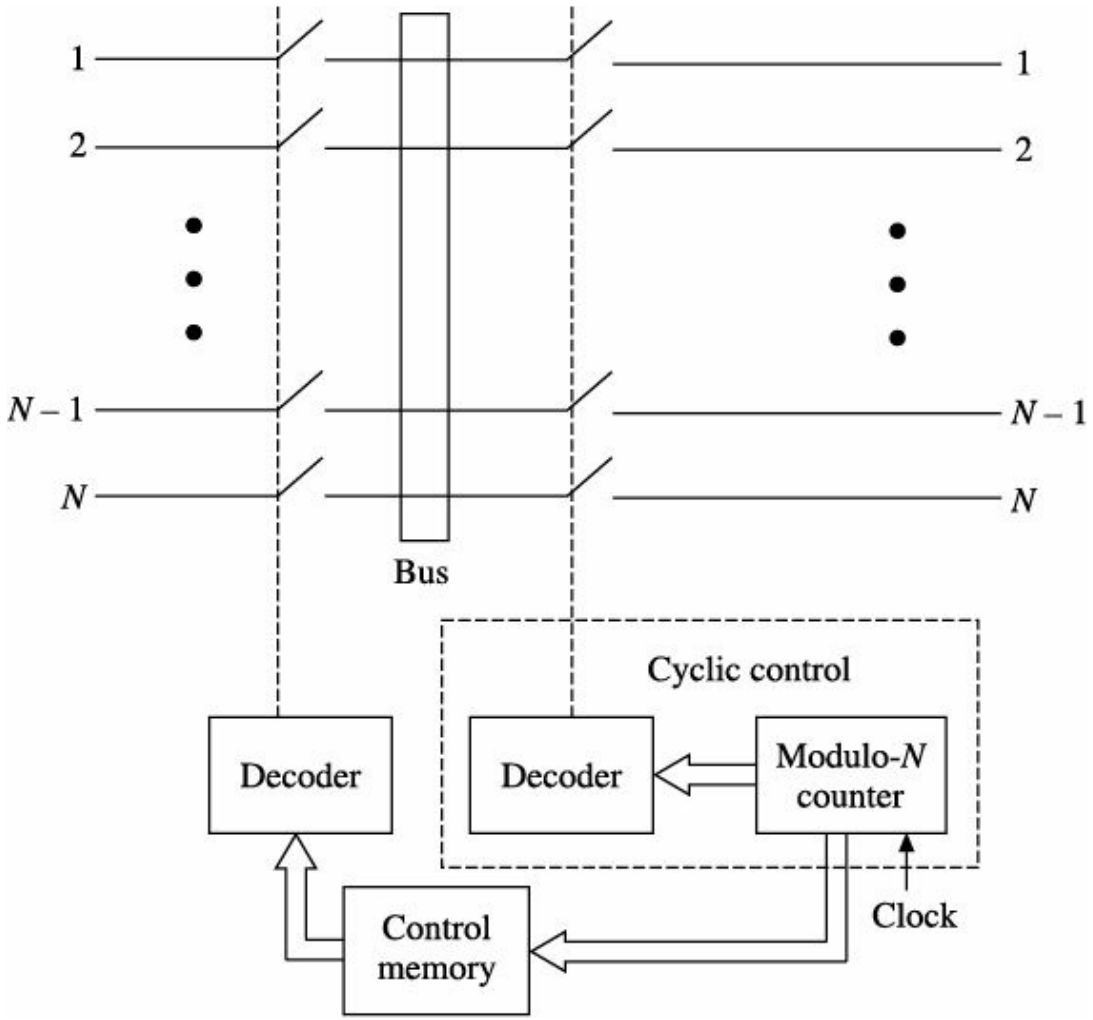

Generalized Time Division Space Switching

- The use of cyclic control in input or output-controlled switches restricts the number of subscribers on the system rather than the switching capacity.
- This is because cyclic control demands that all the lines be scanned irrespective of whether they are active or not.
- In practice, the number of active subscribers is only about 20 per cent of the total.
- Here, each word of the control memory has two addresses: an inlet address and an outlet address. The control memory width is 2 [log2 *N*].
- The operation of the switch proceeds as follows:
- The modulo-*SC* counter is updated at the clock rate. The control memory words are read out one after another. The inlet address is used to connect the corresponding inlet to the bus and so also the outlet address to connect the outlet.
- It may be noted that there is no reservation of the control memory locations for particular inlets or outlets or inlet-outlet pairs unlike in the case of input or output-controlled configurations.

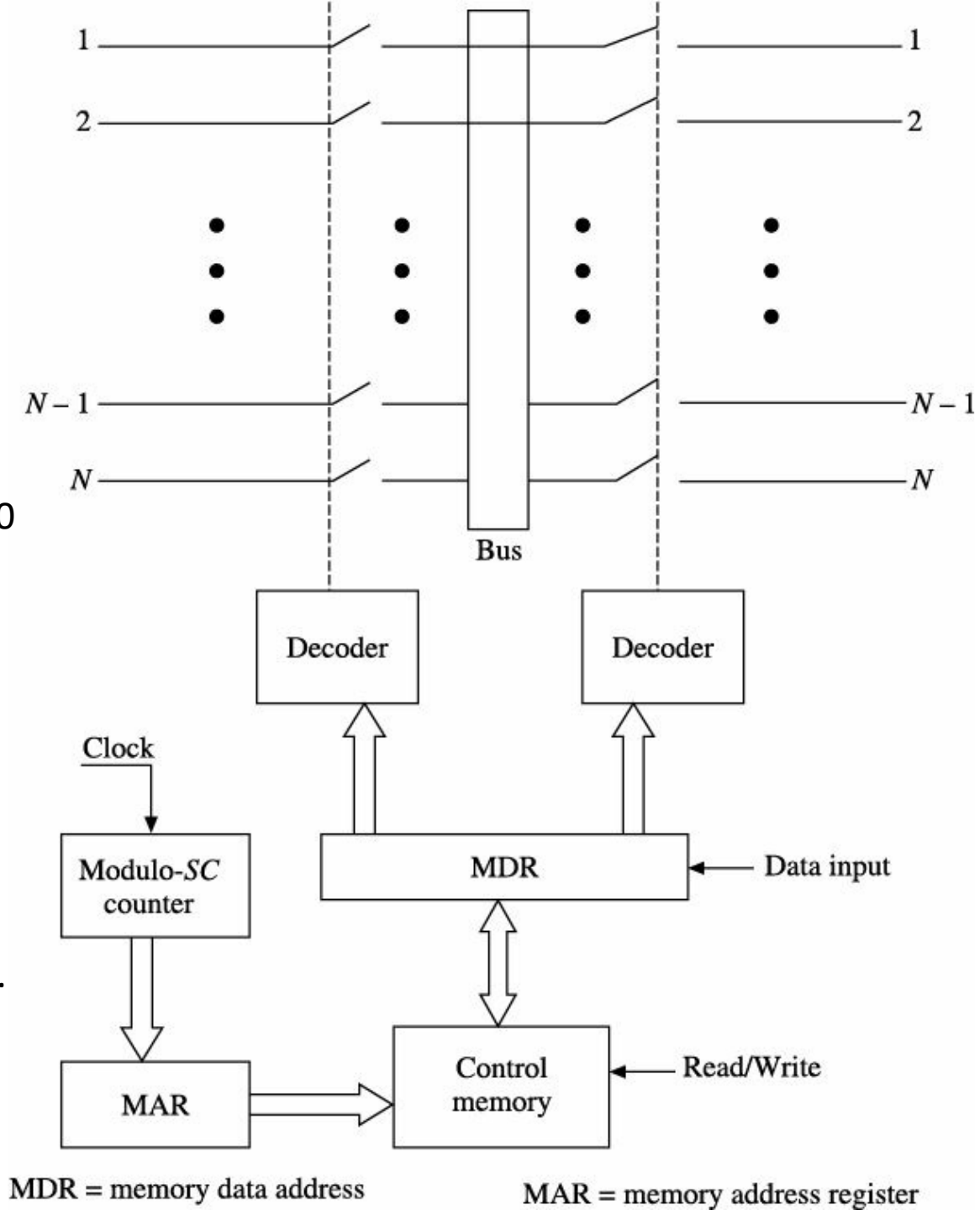

TIME DIVISION TIME SWITCHING

- Another way of organising time division switching is to use a memory block in place of the bus.
- In this, the data coming in through the inlets are written into the data memory and later read out to the appropriate outlets.
- The incoming and outgoing data are usually in serial form whereas the data are written into and read out of the memory in parallel form.
- It is therefore, becomes necessary to perform serial to-parallel conversion and parallel-to-serial conversion at the inlets and outlets respectively.
- The information is not transferred in real time; it is first stored in the memory and later transferred to the outlet.
- A time division time switch may be controlled in any of the following three ways: 1. Sequential write/random read
  2. Random write/sequential read
  3. Random input/random output.

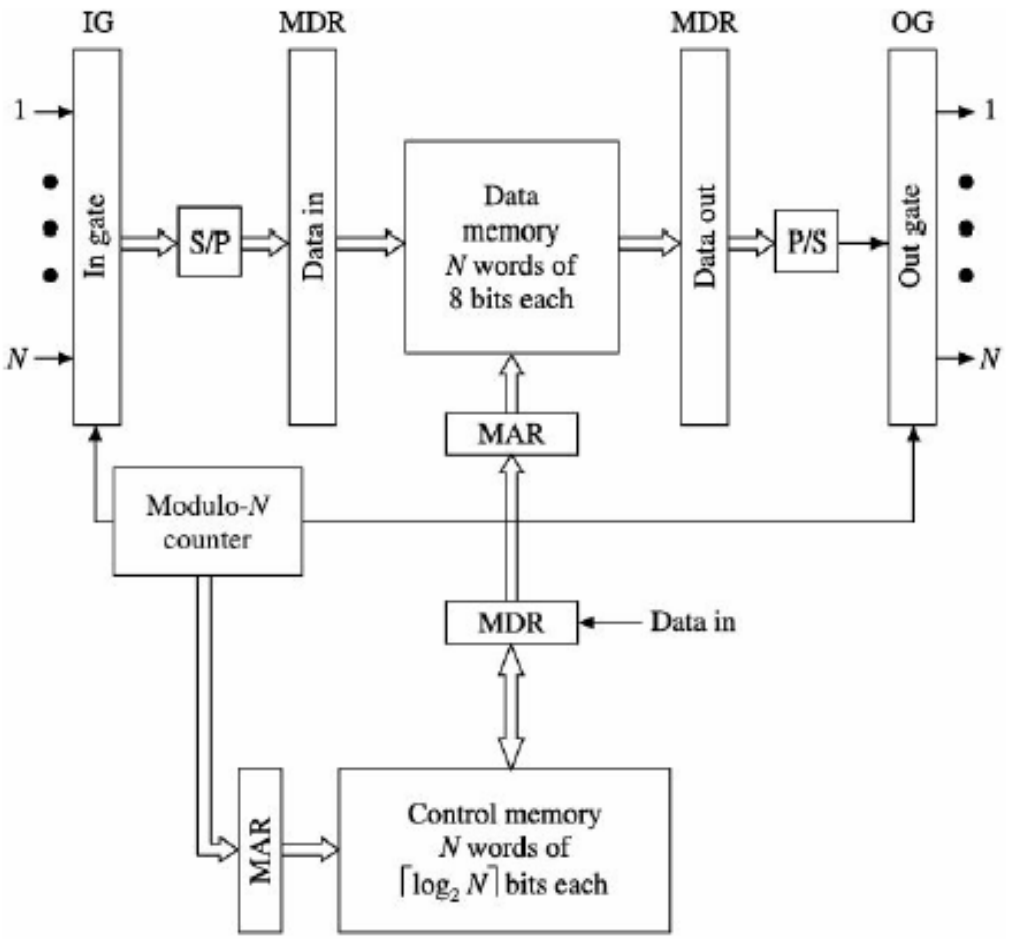

TIME DIVISION TIME SWITCHING Contd.

- When the method of control is **sequential write/random read**, the inlets are scanned in the first phase one after another and the data is stored in the data memory sequentially.
- There is a one-to-one correspondence between the inlets and the locations of the data memory.
- The data memory location *i* corresponds to inlet *i*. The control memory locations, 1, 2, 3, ..., *N* contain the addresses of the inlets corresponding to the outlets 1, 2, 3, ..., *N*.
- The inlet addresses are read out from the control memory in the second phase, the corresponding locations in the data memory are accessed and the data transferred to the outlets in sequence.
- Since any inlet may be connected to any of the outlets, the inlet addresses are randomly distributed in the control memory.
- Since the write access to the data memory in the first phase proceeds sequentially and the read access in the second phase randomly, the nomenclature **sequential write/random read** is used to describe this form of control

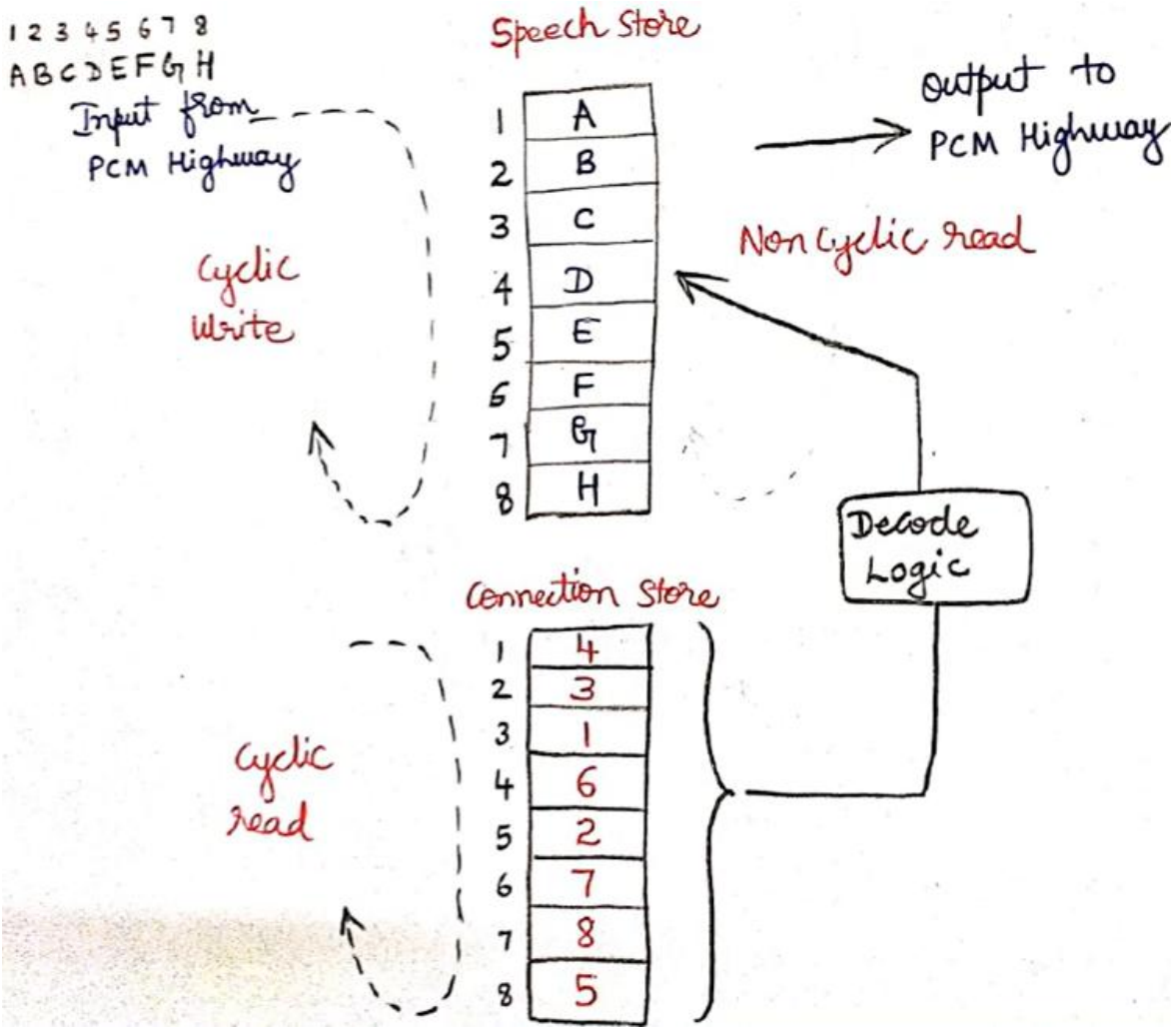

TIME DIVISION TIME SWITCHING Contd.

- In **random write/sequential read** form of control, the control memory contains the addresses of outlets corresponding to the inlets.
- In the first phase, the control memory is read and the inlet data is written into the data memory location specified by the contents of the control memory.
- The inlets are scanned sequentially but the data are written into the data memory randomly.
- In the second phase of operation, the data memory is read out sequentially and the data sent to the outlets sequentially.
- There is no correspondence between the inlets and the data memory locations. But, there is one-to-one correspondence between the outlets and the data memory locations.
- It may, however, be noted that there is a one-to-one relationship between the inlets and the control memory locations.

TIME DIVISION TIME SWITCHING Contd.

- In **random input/random output** scheme, functionally, there are two memory modules, CM1 and CM2, which hold the addresses of the active inlets and outlets respectively.
- There is a one-to-one correspondence between the locations of the two control memories.
- If the address of an active inlet is placed in location x of CM1, the address of the outlet to which this inlet is connected, is placed in the location x of CM2.
- In the first phase, the addresses of the active inlets are read out of CM1 one by one and the data transferred from the respective inlets to the data memory starting from its first location.
- In the second phase, the addresses of the outlets are read out of CM2, and the data from the data memory is transferred to outlets specified by these addresses.
- Entries in the control memory modules specify the active inlet/outlet pairs. Whenever a call is set up, the corresponding inlet and outlet addresses are entered in CM1 and CM2 respectively at the same location addresses.

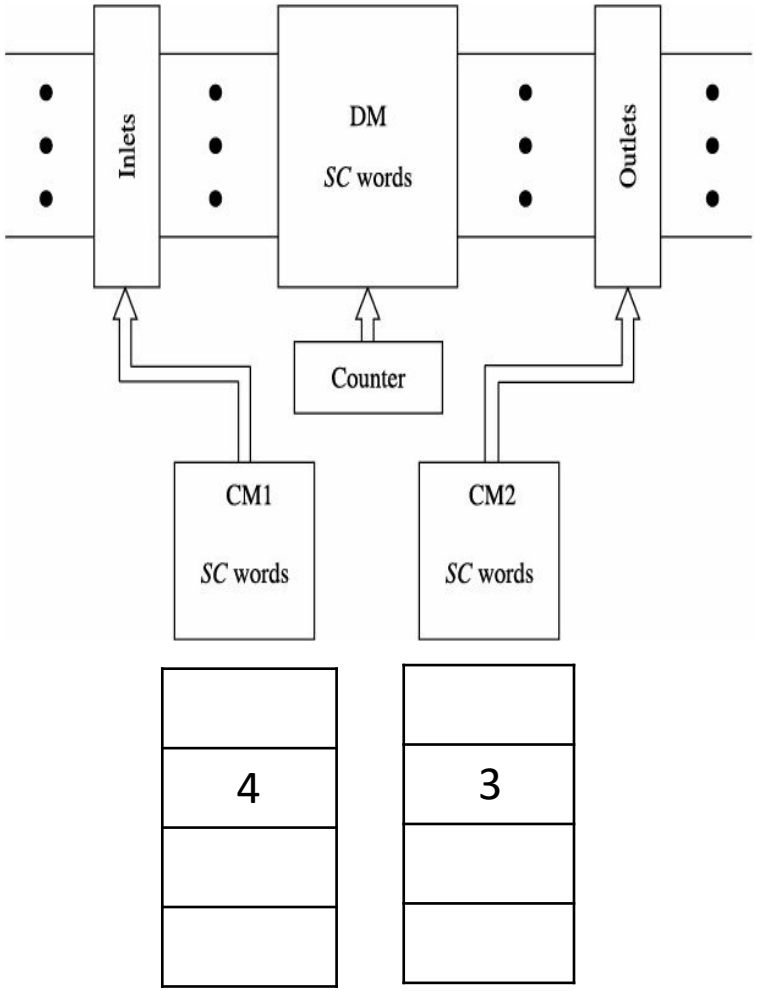

Note: Inlet 4 connect with outlet 3

TIME MULTIPLEXED SPACE SWITCHING

- We now consider switches that are required in **transit exchanges**. Here, the inlets and outlets are trunks which carry time division multiplexed data streams. We call such switches **time multiplexed switches.**
- There are N incoming trunks and N outgoing trunks, each carrying a time division multiplexed stream of M samples per frame.
- Each frame is of 125-µs time duration. In one frame time, a total of MN speech samples have to be switched. One sample duration, 125/M microseconds, is usually referred to as a time slot. In one time slot, N samples are switched.
- The output is cyclically scanned (output-controlled switch). There is a 1-to-M relationship between the outlets and the control memory locations, i.e. there are M locations in the control memory corresponding to each outlet.
- If the location (i, j) contains an inlet address k, it implies that inlet k is connected to the outlet j during the time slot i.
- Where $1 \le i \le M$ and $1 \le j \le N$.

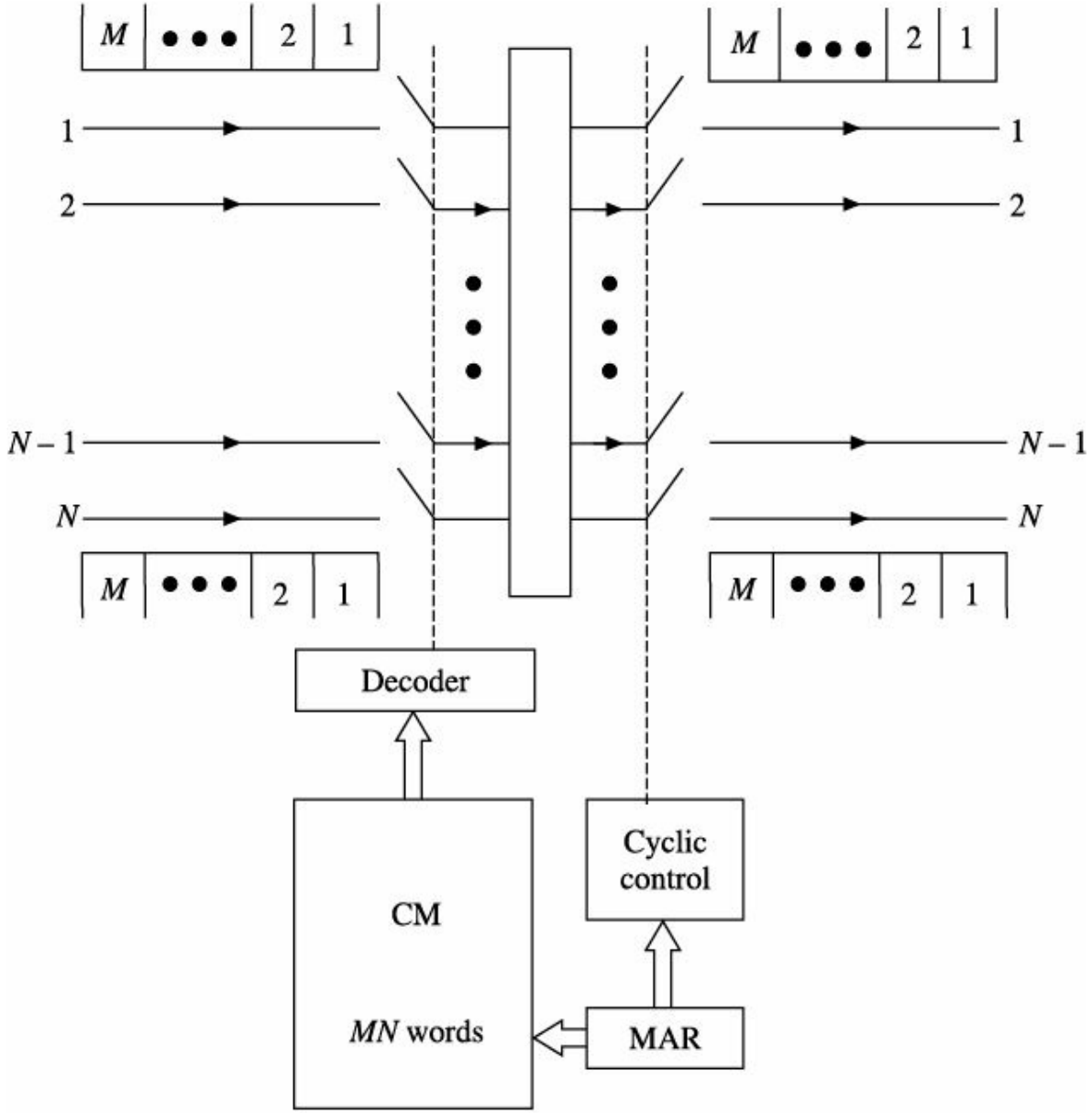

TIME MULTIPLEXED TIME SWITCHING

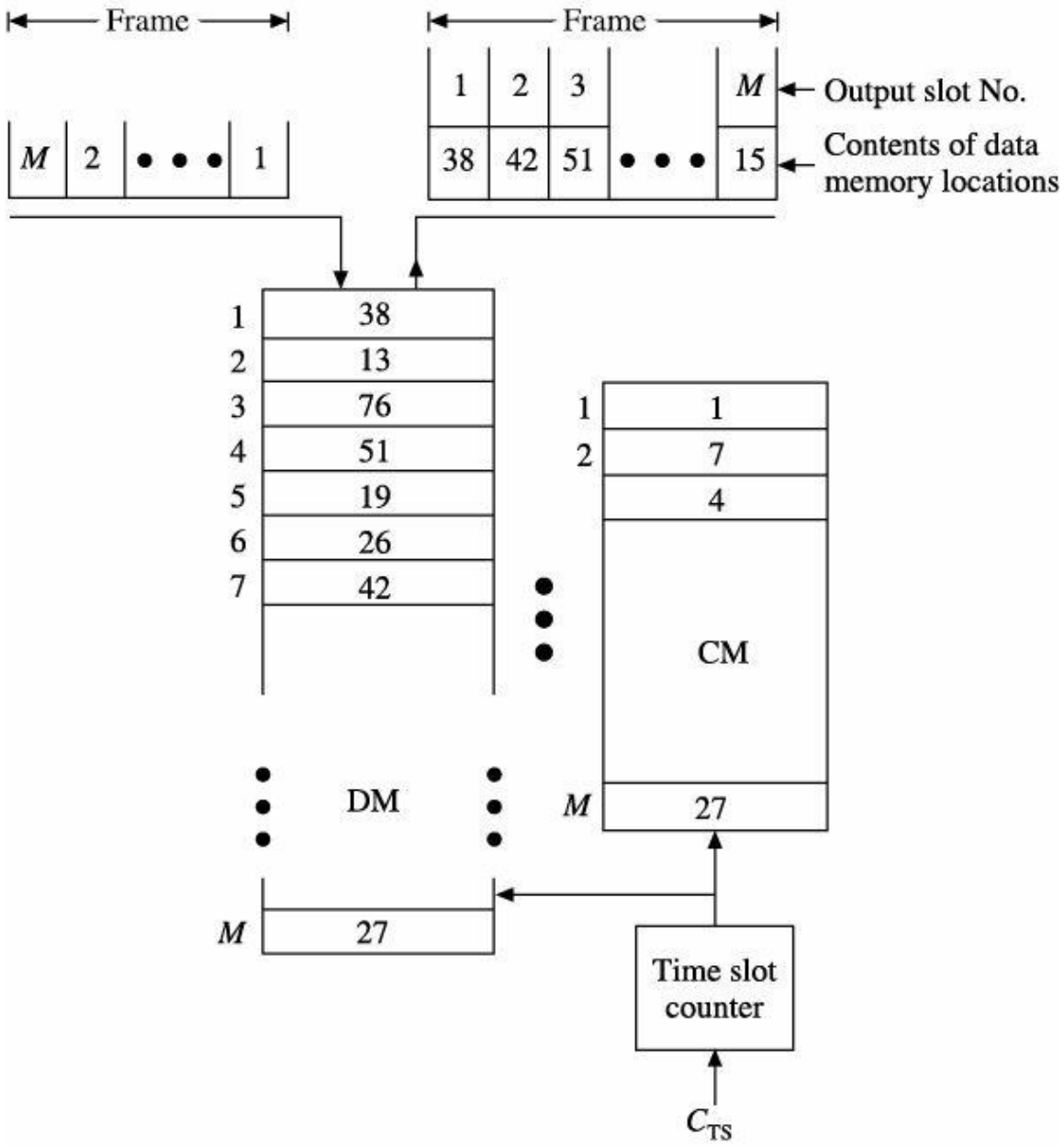

CM = control memory DTS = time slot clock DM = data memory

(a) Principle of time slot interchange

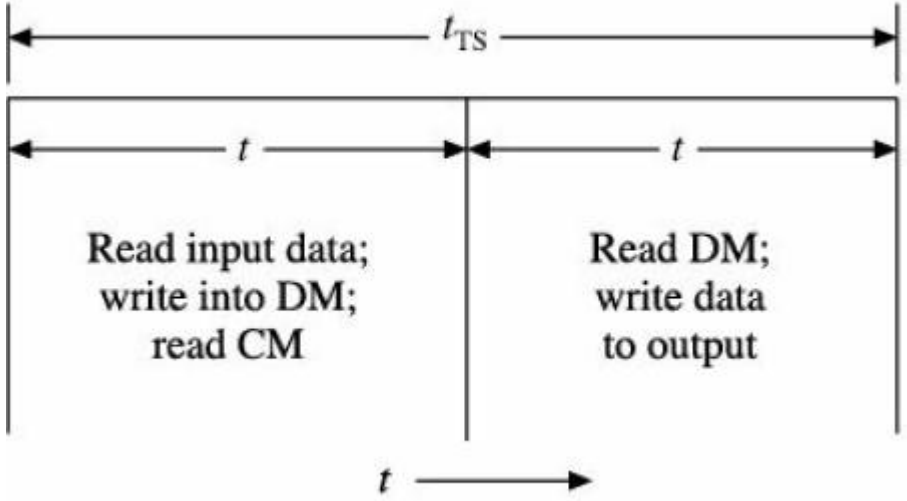

(b) Operations in a time slot

COMBINATION SWITCHING

- Time multiplexed time division space switches do not provide full availability as they are not capable of performing time slot interchange.
- Time slot interchange switches are not capable of switching sample values across the trunks without the help of some space switching matrices.
- Therefore, a combination of the time and space switches leads to configurations that achieve both time slot interchange and sample switching across trunks.
- These structures also permit a large number of simultaneous connections to be supported for a given technology.
- A combination switch can be built by using a number of stages of time and space switches.

TWO STAGE COMBINATION SWITCHING: TIME-SPACE (TS) SWITCH

- An input subscriber assigned to line 4 at time slot 7 is identified by the label *I*47. Similarly, a subscriber connected to the outlet 1 and time slot 6 is identified by *O*16.
- The input sample from *IS*47 is first moved to *IS*46 at the output of TSI switch. During the time slot 6, a connection is established between the inlet 4 and the outlet 1 at the space switch.
- While this switch configuration ensures full availability, it is not nonblocking.
- Consider the two connections to be established between *I*47 and *O*29, and *I*43 and *O*69. Both the samples originate from the same inlet and are destined to the same time slot in different outlets. Both input samples require to be switched to time slot 9, which is not possible.
- Only one of them can be switched to slot 9. In general, blocking occurs if two inputs *I*ij and *I*ik are destined to outputs *O*pq and *O*rq.

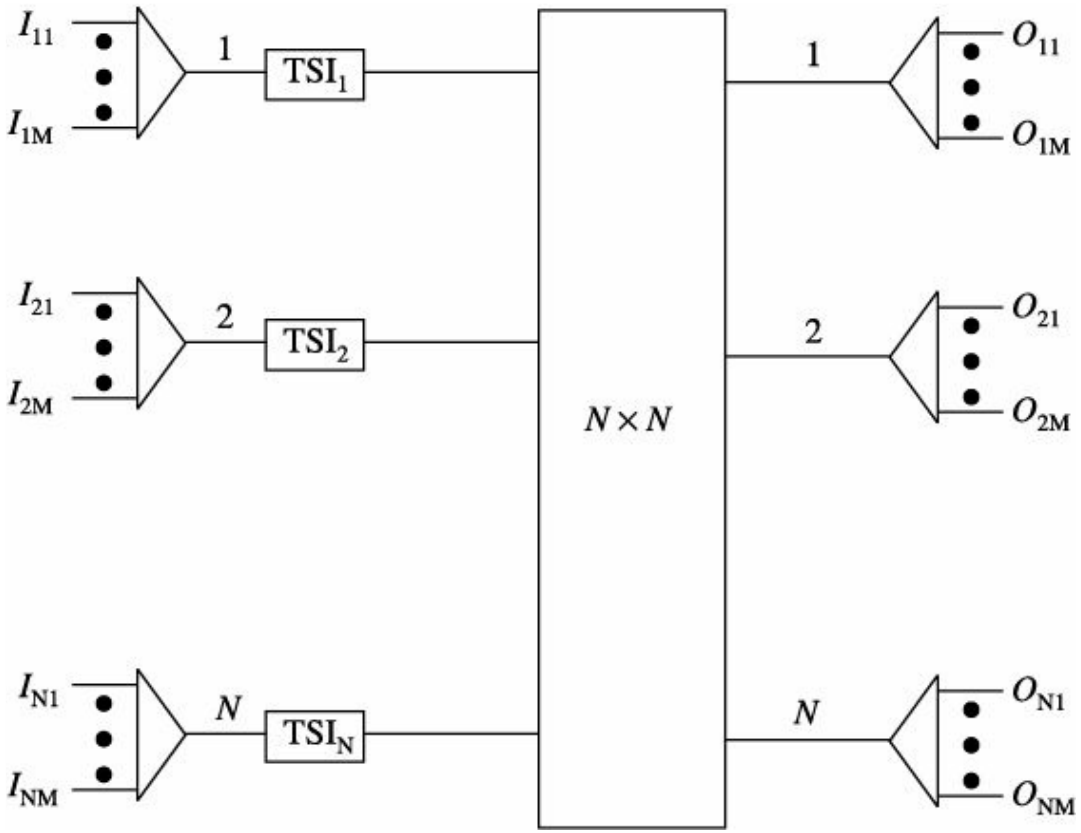

- In other words, it is only possible to set up a single connection between any of the subscribers on an inlet and any of the subscribers connected to the same time slot on the output side.

TWO STAGE COMBINATION SWITCHING: SPACE-TIME (ST) SWITCH

- Consider a connection between *I*27 and *O*16. During the time slot 7, the input sample is switched from inlet 2 to outlet 6 by the space switch.
- It is then switched to time slot 6 by the time switch (TSI). Similar to a TS switch, this switch is also blocking.
- This happens when the input samples originate from two different inlets during the same time slot and are destined to the same outlet though to different time slots.
- As an example, consider *I*75 and *I*85 to be switched to *O*96 and *O*92 respectively.
- Only one of the inputs can be space switched during time slot 5 to the output line 9 and the other is blocked.

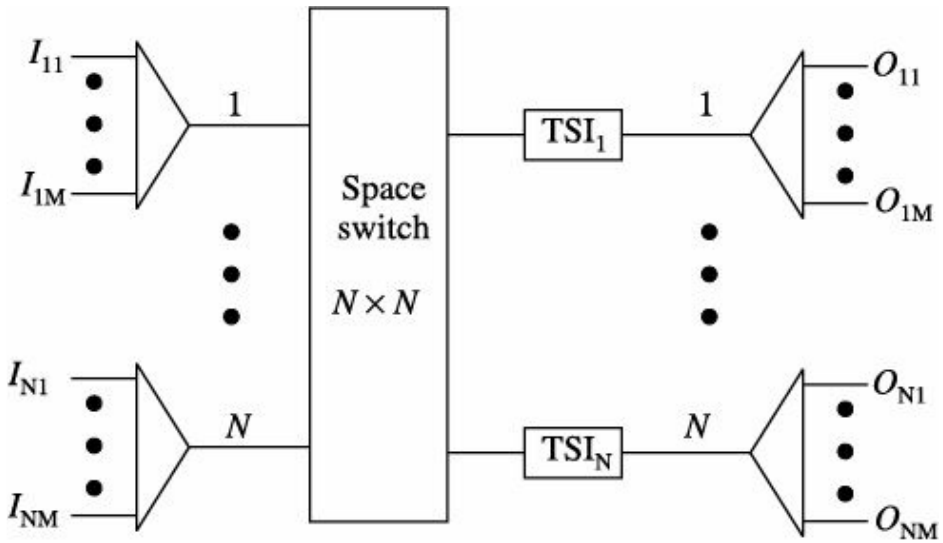

THREE STAGE COMBINATION SWITCHING: TIME-SPACE-TIME (TST) SWITCH

- The first flexibility that becomes obvious in this arrangement is that there is no need to have a fixed space stage time slot for a given input or output time slot.
- For example, *I*47 may be moved to *O*25 via an intermediate time slot 3. I47-I'43-O'23-O25
- An incoming channel time slot may be connected to an outgoing channel time slot using any possible space array time slot.
- There are many alternative paths between a prescribed input and output unlike a two-stage network which has only one fixed path.
- This factor reduces the value of the blocking probability of a three-stage combination switch.
- The worst case happens when (M − 1) slots of *O*k are busy and the outlet is occupied for this purpose during (M − 1) slots when the inlet *I*j is free.

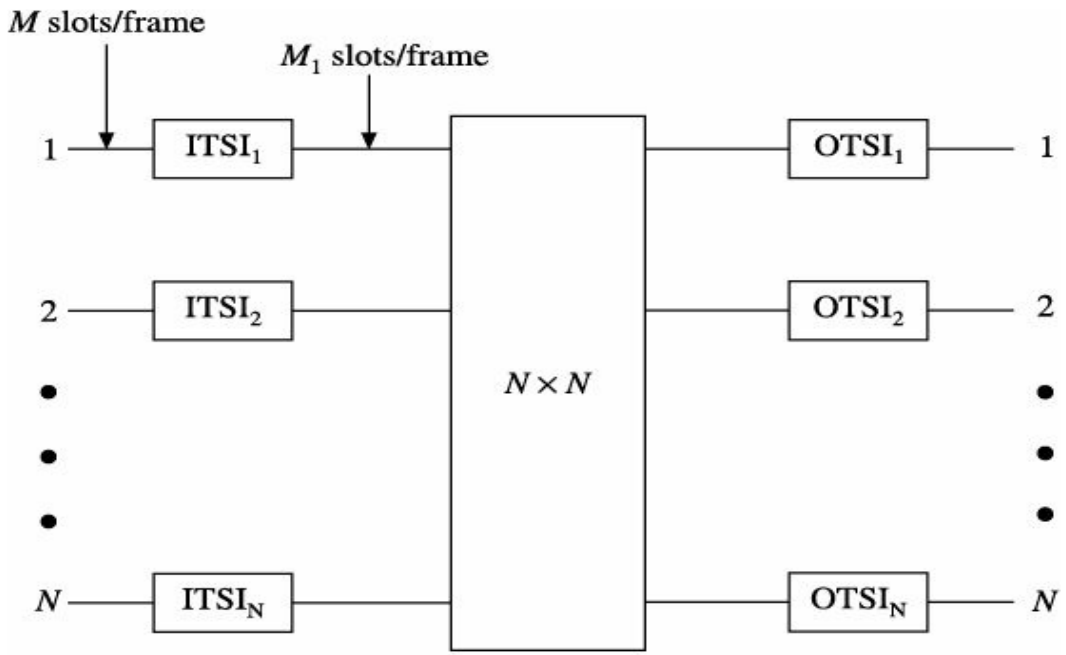

- If this happens, we would need one more additional time slot to establish a connection between the free time slots of *I*j and *O*k. This means that we need a total of (M − 1) + (M − 1) + 1 time slots, i.e. 2M − 1 time slots in the intermediate space stage.
- Similar to the case of three-stage space division networks.

THREE STAGE COMBINATION SWITCHING: SPACE-TIME-SPACE (STS) SWITCH

- A space-time-space (STS) architecture consists of an $N \times k$ space matrix at the input, an array of k TSI switches in middle and a $k \times N$ space matrix at the output.
- In this architecture, the choice of input and output time slots is fixed for a given connection.
- But the flexibility is provided by the ability to utilise any free TSI switch by space switching on the input and the output side.
- There are as many alternative paths for a given connection as there are TSI switches
- For example, *I*79 may be connected to *O*84 by passing through TSI3. The sequence is as follows:

  *I*79 – *I*'39 – *O*'34 – *O*84

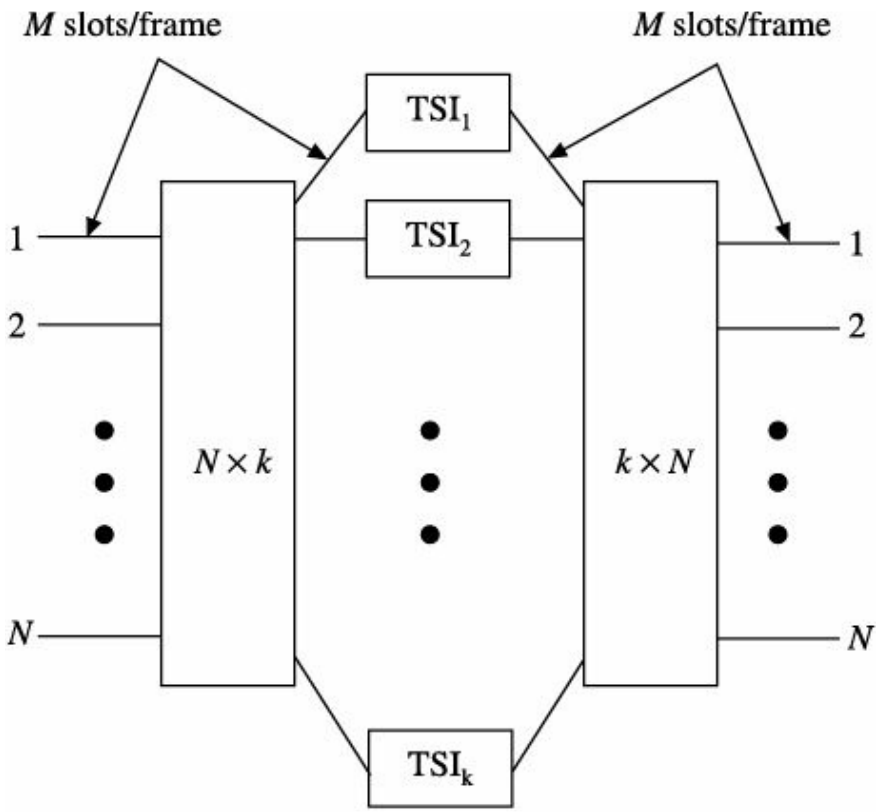

	Second Stage Element	Expansion ~~Elements~~ Concentration	Condition for Non blocking	β	P_B
SSS	S	Exp: $S > P$ Con: $S < P$	$S = 2p - 1$	$p\alpha/S$	$[1-(1-\beta)^2]^S$
STS	k	$k > N$ $k < N$	$k = 2N - 1$	$N\alpha/k$	$[1-(1-\beta)^2]^k$
TST	M_1	$M_1 > M$ $M_1 < M$	$M_1 = 2M - 1$	$M\alpha/M_1$	$[1-(1-\beta)^2]^{M_1}$

→ 20 lines with 16 slots/channels each.
$N = 20$, $M = 16$

→ Each slot/channel is ~~busy~~ busy for 12 minutes on average in 1 hour interval
$\alpha = 12/60 = 0.2$

→ Concentration by a factor of 2
$\beta = 2\alpha = 0.4$

STS → $k = N/2 = 10$
TST → $M_1 = M/2 = 8$.