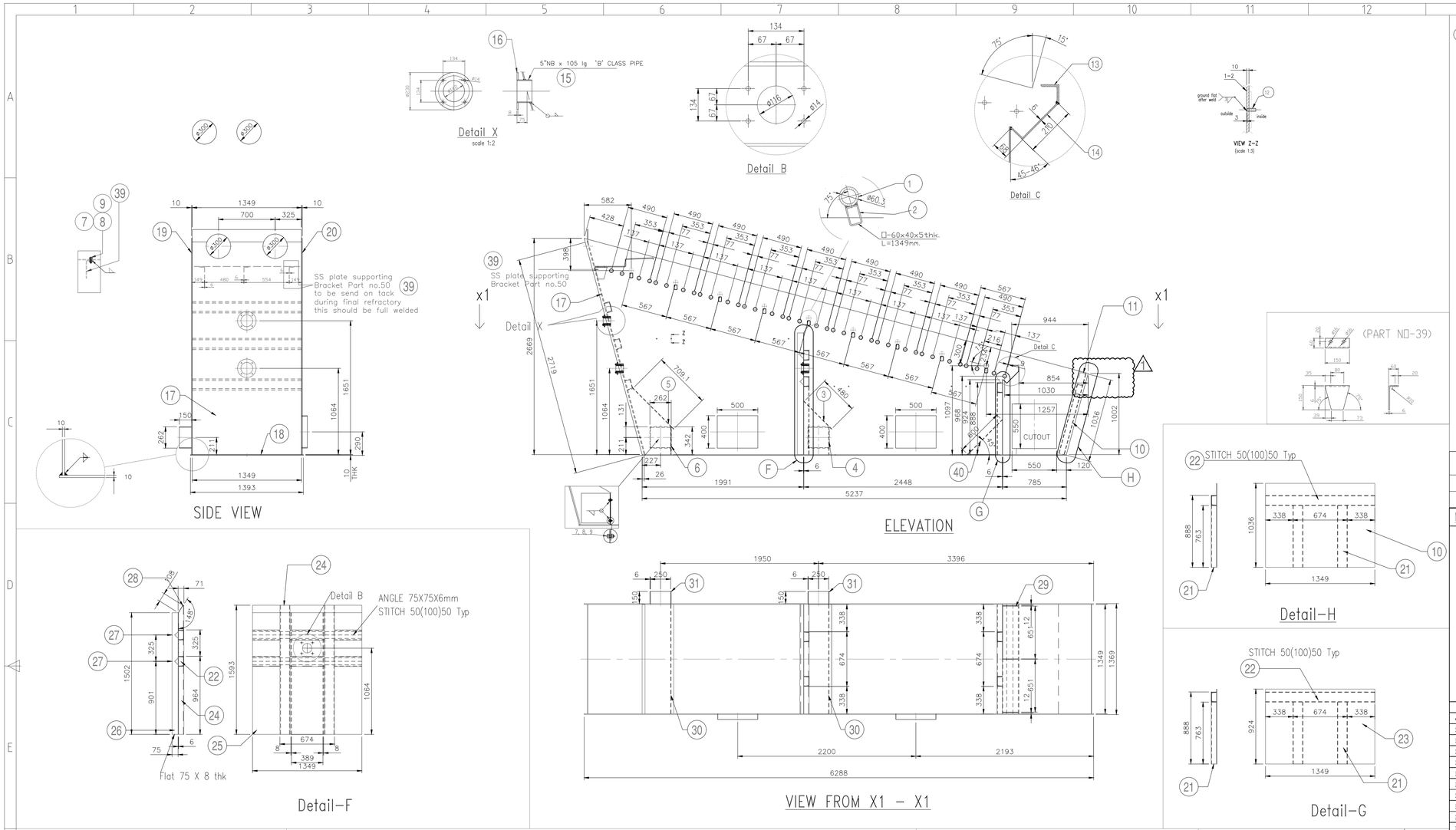

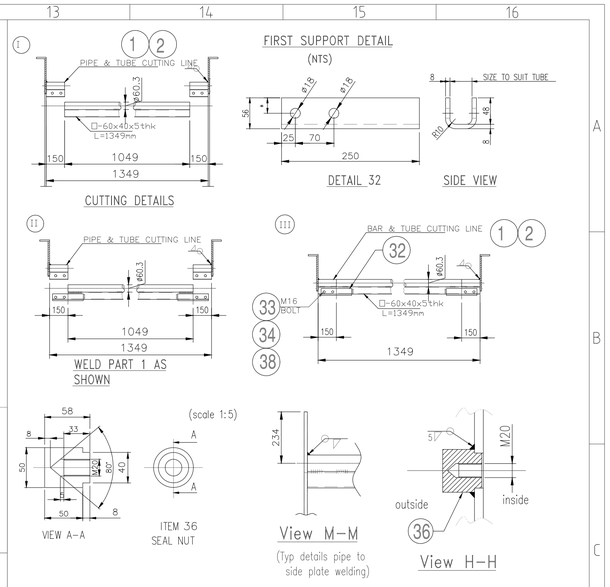

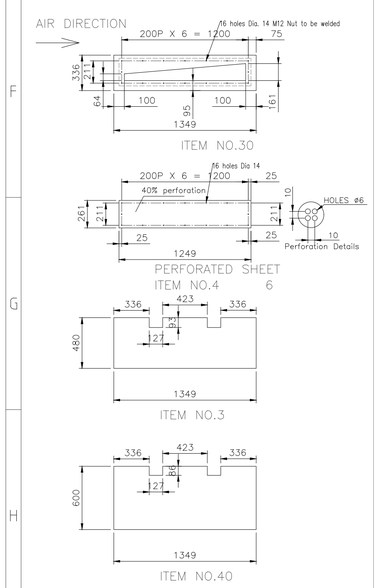

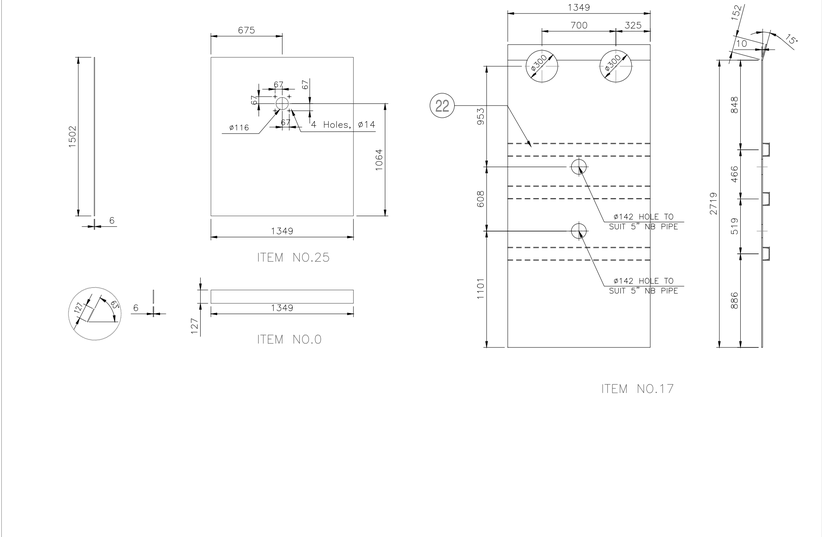

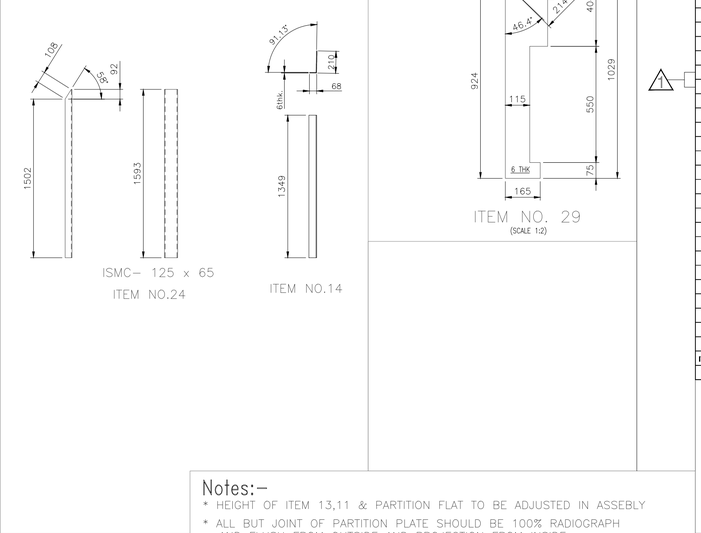

Painting instructions

Execution: Indoor	Metal temperature: up to 200°C	Color: RAL7016
Insulation: No	Paint heat resistance: 200°C	Paint Procedure: FMPP/001/01/17

Material of Make & IS standard to Refer

The materials and construction shall conform to the following indian Standards (latest issue).

Structural Steel	IS: 808
Plates up to and below 20mm thk	IS: 2062-Grade 'A'
Bolts	IS:1367-(class 8.8 Chrome Plate)
Nuts	IS:1364-(class 8 Chrome Plate)
Washers	IS: 2016 (Chrome plated)
Tapered washers	IS: 5372, IS:5374
Elecrtodes	IS: 814, IS: 815, IS:1442
Welding	IS: 813, IS: 816, IS: 817, IS: 822
Fabrication & erection	IS: 800
Tolerance for fabrication of steel structure	IS: 7215, IS:12843
Detailed safety precautions during erection of steel structures.	IS: 7205

TOTAL Weight (Kgs) **3464.6**

ITEM	CODE NO	DESCRIPTION	SPECIFICATION	MATERIAL	QTY	WEIGHT	REMARK
40		PLATE FOR 2 ZONE	PLATE 6 Thk. x 600 x 1349	IS 2062 Gr. B	1	38.1	Ref sheet 1 of 2
39		PLATE	PL.6 Thk x 210 x 150 LG	IS 2062 Gr. B	3	4.5	
38		WASHER	M20	M.S.	72	2.0	
37		COUNTER SUNKSCREW	M20 x 40 LG	H.T.	72	18.7	
36		NUT	M20	M.S.	72	4.4	
35		BOLT	M 16 x 80 LG	H.T.	4	0.1	
34		NUT	M 16	M.S	4	0.1	
33		WASHER	M 16	M.S.	8	1.2	
32		PLATE	PL. 8Thk x 150 x 250 LG	IS 2062 Gr. B	2	4.7	
31		AIR NOZZLE PLATE	PLATE 5 Thk. x 150 x 250	IS 2062 Gr. B	8	11.8	
30		PERFORATED SHEET FIxING PLATE	PLATE 6 Thk. x 336 x 1349	IS 2062 Gr. B	2	42.7	Ref sheet 1 of 2
29		SUPPORTING PLATE	PLATE 6 Thk x 200 x 1027	IS 2062 Gr. B	5	48.4	Ref sheet 1 of 2
28		TOP PORTION SEALING PLATE	PLATE 6 Thk x 1349x 108	IS 2062 Gr. B	1	6.9	Ref sheet 1 of 2
27		ANGLES FOR STIFFENING	ISA 75 x 75 x 6 Thk x 1349 LG	IS 2062 Gr. A	2	18.3	Ref sheet 1 of 2
26		SUPPORTING FLAT FOR PARTITION PLATE	FLAT 75 x 8 Thk x 1502 LG	IS 2062 Gr. B	2	14.1	Ref sheet 1 of 2
25		PARTITION PLATE	PLATE 6 Thk x 1349 x 1502	IS 2062 Gr. B	1	95.4	Ref sheet 1 of 2
24		SUPPORTING CHANNEL FOR PARTITION PLATE	ISMC 125 x 65 x 1593 LG	IS 2062 Gr. A	2	41.7	Ref sheet 1 of 2
23		PARTITION PLATE 4-ASH PIT	PLATE 6 Thk. x 1349 x 924	IS 2062 Gr. B	1	58.7	Ref sheet 1 of 2
22		SUPP. CHANNEL FOR PARTITION PLATE	ISMC 125 x 65 x 1349 LG	IS 2062 Gr. A	7	123.7	Ref sheet 1 of 2
21		SUPP. CHANNEL FOR PARTITION PLATE 4-ASHPIT	ISMC 125 x 65 x 763 LG	IS 2062 Gr. A	4	40.0	Ref sheet 1 of 2
20		SIDE PLATE	10 Thk. x 2669 x 6220	IS 2062 Gr. B	1	810.1	Ref sheet 2 of 2
19		SIDE PLATE	10 Thk. x 2669 x 6220	IS 2062 Gr. B	1	810.1	Ref sheet 2 of 2
18		BOTTOM PLATE	PLATE 10 Thk. x 5237 x 1393	IS 2062 Gr. B	1	572.7	Ref sheet 2 of 2
17		DRIVE END PLATE	PLATE 10 Thk. x 1349 x 2870	IS 2062 Gr. B	1	303.9	Ref sheet 1 of 2
16		FLANGE	PLATE 8 Thk. x DIA.230	IS 2062 Gr. B	2	5.2	
15		5" NB 'B' CLASS PIPE	105 LG	IS 1239	2	3.4	
14		REAR PORTION SEALING PLATE	PLATE 6 Thk. x 1349 x 280	IS 2062 Gr. B	1	17.8	Ref sheet 1 of 2
13		SUPPORTING ANGLES FOR ASH PIT	ISA 75 x 75 x 10 Thk. x 1349 LG	IS 2062 Gr. A	1	14.8	
12		THREADED ROD	M12 x 35 LG	IS 2062 Gr. A	16	0.7	
11		SUPPORTING ANGLE FOR REAR END PLATE	ISA 75 x 75 x 10 Thk. x1349 LG	IS 2062 Gr. A	1	14.8	
10		REAR END PLATE	PLATE 6 Thk. x 1349 x 1035	IS 2062 Gr. B	1	65.8	Ref sheet 1 of 2
9		WASHER	M 12	M.S.	74	0.7	
8		NUT	M 12	CLASS 8.8	40	0.5	
7		BOLT	M 12 x 30 LG	CLASS 8.8	40	2.1	
6		PERFORATED SHEET 2 ZONE	PLATE 3 Thk. x 261 x 1249	IS 2062 Gr. B	1	7.7	
5		AIR BOX TOP PLATE FOR 2 ZONE	PLATE 6 Thk. x 709 x 1349	IS 2062 Gr. B	1	45.0	Ref sheet 1 of 2
4		PERFORATED SHEET 1 ZONE	PLATE 3 Thk. x 261 x 1249	IS 2062 Gr. B	1	7.7	
3		AIR BOX TOP PLATE FOR 1 ZONE	PLATE 6 Thk. x 480 x 1349	IS 2062 Gr. B	1	30.5	Ref sheet 1 of 2
2		HOLLOW RECTANGULAR SECTION FOR GRATE SUPPORT	60 x 40 x 5 Thk x1349Lg	IS 2062 Gr. A	9	84.6	
1		PIPE	50 NB x SCH.80 x 1349 LG	A106 Gr. B	9	90.8	

BILL OF MATERIAL

Notes:-

* HEIGHT OF ITEM 13,11 & PARTITION PLATE TO BE ADJUSTED IN ASSEBLY
* ALL BUT JOINT OF PARTITION PLATE SHOULD BE 100% RADIOGRAPH AND FLUSH FROM OUTSIDE AND PROJECTION FROM INSIDE
* PART NO.18 TO BE WELDED FROM INSIDE AND WELD 10 mm THK

* ALL CHANNELS AND ANGLE SHOULD BE WELD TO PARTITION PLATE BY STITCH WELD ONLY.

REV.NO.	DESCRIPTION	DATE
1	REVISED AS MARKED	02.05.20

forbes vyncke

* DRAWING NOT SCALE.
* REMOVE SHARP EDGES.
* ALL DIMENSIONS ARE IN mm UNLESS OTHERWISE STATED.
* TAPPED HOLES CHAMFER TO FIRST THREAD x 45°

SCALE: 1:20

forbesvyncke Pvt. Ltd. Pune, India.

THIS DRAWING AND DESIGN IS THE PROPERTY OF M/s. ForbesVyncke Pvt. Ltd., & MUST NOT BE COPIED OR LENT WITHOUT THEIR PERMISSION IN WRITING.

DESIGNED & ENGINEERED BY	VSD	11.03.2020
DRAWN BY	MSM	11.03.2020
APPROVED BY	NRK	11.03.2020

TITLE
BASE FRAME WITH BOX

DRG.NO.
A1-C3M-FGFV19130BAA

SHEET : 1 OF 2 REV.NO. 1