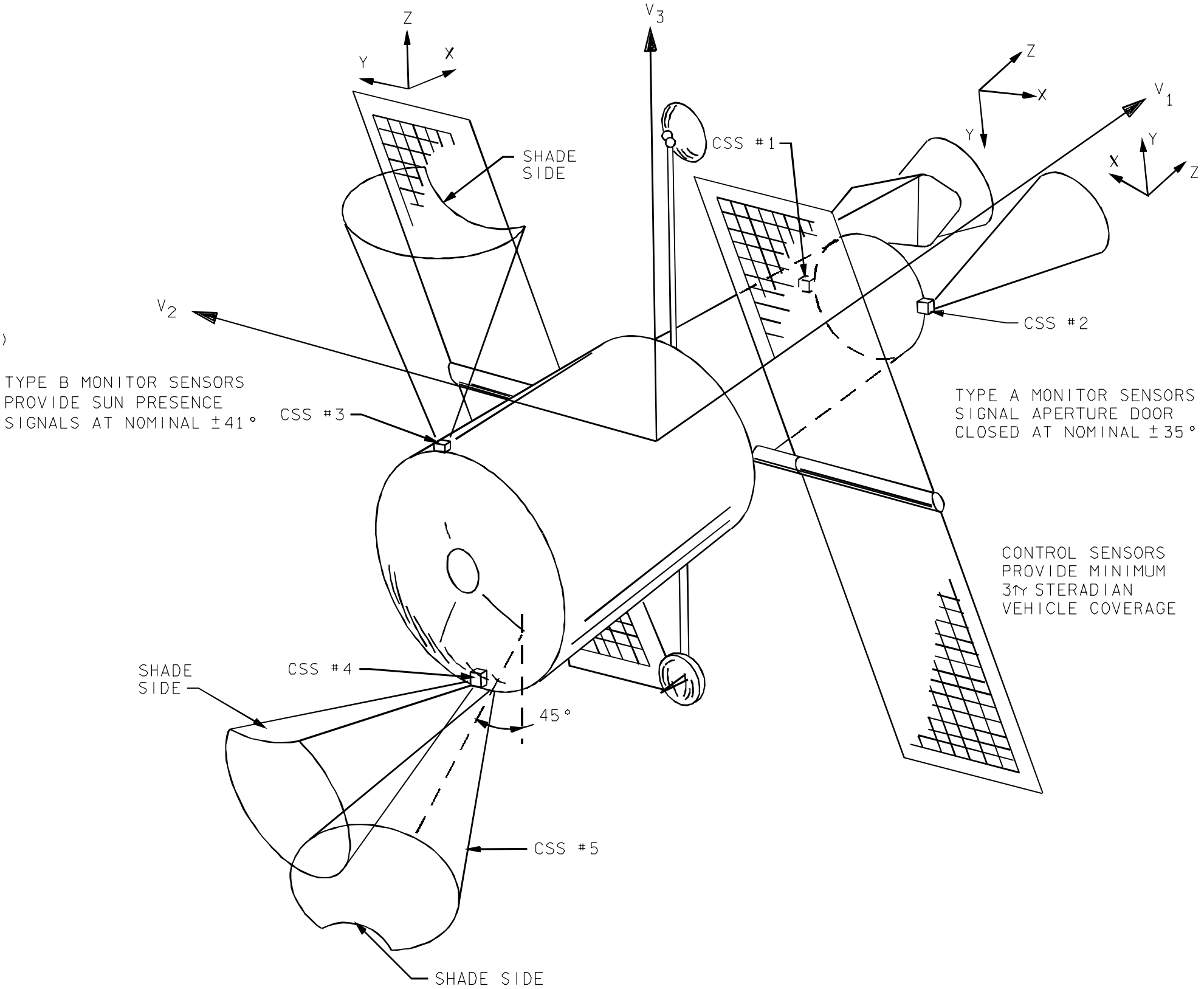

COARSE SUN SENSOR LOCATIONS AND FOV

22063X276.ART;3