(12)Indian Patent Specification

---

(11) Patent Number: 317816 (21) Application Number: 509/CHE/2010

(22) Filing Date: 26/02/2010 (43) Publication Date: 04/05/2012 (45) Grant announcement date: 07/08/2019

(71) Applicant(s): TVS MOTOR COMPANY LIMITED

(72) Inventor(s): PATRA, SOUMYA PRAKASH
KRISHNABHATTA, NAGARAJA
SESHAN, RAMIAH

(51) International Classifications: A42B

(54) Title: HELMET HOLDING ASSEMBLY FOR MOTORCYCLES

(57) Abstract: A holder attachment (401) having means for attaching said helmet holding assembly (301) on to the handle bar (105), wherein the holder assembly (301) is mounted on the handle bar (105) and secure the helmet (203) such that the chin guard (302) of the helmet (203) is held by the holder attachment (401), the posterior portion of the helmet (203) rests on a fuel tank (106) and the axis (303) of the said helmet holding assembly (301).

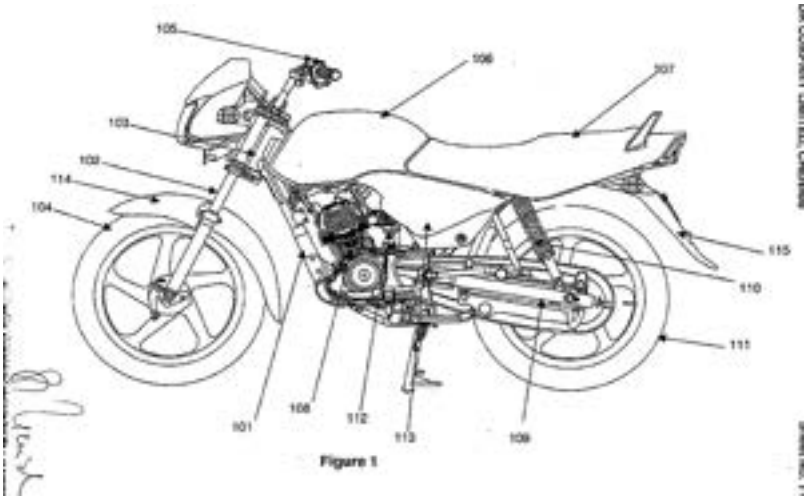

Figure 1

700117801

ABSTRACT

HELMET HOLDING ASSEMBLY FOR MOTORCYCLES

A holder attachment **(401)** having means for attaching said helmet holding assembly **(301)** on to the handle bar **(105)**, wherein the holder assembly **(301)** is mounted on the handle bar **(105)** and secure the helmet **(203)** such that the chin guard **(302)** of the helmet **(203)** is held by the holder attachment **(401)**, the posterior portion of the helmet **(203)** rests on a fuel tank **(106)** and the axis **(303)** of the said helmet holding assembly **(301)**.

<To be published with **Fig. 5**>

For TVS MOTOR COMPANY LIMITED

R NAGARAJAN
General Manager - IP Compliance

05-Sep-2017/55559/509-CHE-2010/Abstract

PATENT OFFICE CHENNAI 06/09/2017 11:13

700117804

I/We claim:

1. Helmet holding assembly **(301)** for motorcycles comprising
   a fuel tank **(106)** having a fuel tank cap **(202)** on it;
   a handle bar **(105)**; and
   a locking device **(306)** having means for securing a helmet **(203)**;
   characterized in that,
   said helmet holding assembly **(301)** includes a holder attachment **(401)** for attachment with the handlebar **(105)**, wherein said helmet holding assembly **(301)** is mounted on the handle bar **(105)** to secure the helmet **(203)** such that the chin guard **(302)** of the helmet **(203)** is held by the holder attachment **(401)**, wherein the posterior portion of said helmet **(203)** rests on the fuel tank **(106)** and an axis **(303)** passing through the helmet holding assembly **(301)** to maintain symmetry and balance during riding conditions, said helmet holding assembly **(301)** includes a locking device **(306)** comprising a locking portion **(405)** for securing the helmet and a facilitating means **(406)** that opens the locking portion **(405)** in a vertical direction.
2. The helmet holding assembly **(301)** for motorcycles as claimed in claim 1, wherein said holder attachment **(401)** it is supported to the handle bar **(105)** either by bolts **(404)** or through snap fits.
3. The helmet holding assembly **(301)** for motorcycles as claimed in claim 1, wherein said fuel tank cap **(202)** is encircled with a protecting layer **(201)**;
4. The helmet holding assembly **(301)** for motorcycles as claimed in claim 1, wherein said protecting layer **(201)** is a metal foil
5. The helmet holding assembly **(301)** for motorcycles as claimed in claim 1, wherein said protecting layer **(201)** is a polymer.

For TVS MOTOR COMPANY LIMITED.

R NAGARAJAN
General Manager - IP Compliance

PATENT OFFICE CHENNAI 06/09/2017 11:13

05-Sep-2017/55559/509-CHE-2010/Claims

Helmet holding assembly for motorcycles

Field of the invention

The present invention relates to a "Helmet holding assembly for motorcycles" and more particularly to a helmet holding system secured on the upper bracket.

Relevant prior art

Helmets are mandatory requirement for riding a motorcycle. Since a driver must wear a helmet when driving a motorcycle, motorcycles are provided with helmet holders for holding the helmet when they are not in use. Generally, the helmet holder that is provided in the vehicle comprises of a hook for hanging the chin guard of the helmet. This hook is provided with a lock for securing it and preventing it from being stolen.

The helmet holder is attached to a suitable place on the motorcycle frame such as the pillion rider handle or on the leg guard. These are mounted on such a way that the helmet while dangling do not physically interfere with other devices present on the motorcycle. Also when the helmet is held in the position, one of the important considerations is that it should not get wet in rain when exposed. Moreover, placing the helmet of the pillion rider becomes more cumbersome especially while riding the vehicle.

Also when the helmet is not required while moving the vehicle for short distances such as taking the vehicle in and out of the garage, going to ATMS for withdrawal of money, parking stations, etc and thus fastening the helmet on to the holder and again unfastening it creates lot of trouble and hassles.

Another problem that is associated in the current art is difficult of opening the lock of the helmet holder and in most cases the driver has to get down from the vehicle to open the holder lock for accessing the helmet.

As a result, it is not easy to determine the best position on the frame of the motorcycle to attach the helmet holder.

Hence the main objective of the present invention is to provide a helmet holder on the motorcycle that overcomes the above said lacunas in the prior art.

Another objective of the present invention to provide a light and easy mountable holder that holds the holder securely while riding the motorcycle.

Another objective of the present invention is to provide a holding device where the user has the option to put it in a permanent fashion or use as a retrofittable device.

Another objective of the present invention is to provide a holding device that adds to the aesthetics of the vehicle.

Another objective of the present invention is to provide a holding device that prevents probable damage of any part in the vehicle due to dangling of the helmet.

Another objective of the present invention is to provide a locking mechanism in the holder that suitably fits to the other design requirements with respect to functionality as well as aesthetics.

Another objective of the present invention is to provide a foldable holding device that could be reduced in dimensions when not in use.

Summary of the invention

Helmets used for motorcycles come in two variants, namely full and half helmets. Full helmets have construction covering the total face and having a chin guard that is used for protecting the face as well as holding the helmet on to the helmet holder.

Accordingly, the first aspect of the present invention a helmet holding assembly that can be provided on the handle bar assembly securely mounted on the upper bracket nuts or bolted to the handle bar. The helmet holder assembly is centrally mounted wherein the axis of holder assembly passes through the handle bar assembly and the steering nut. This helps to maintain symmetry and balance and doesn't cause any possible damage to any part of the vehicle even during riding conditions with the helmet secured. The securing can be done either in a retrofittable manner by having suitable means of fastening on the upper bracket nuts or it could be permanently

fastened to the upper bracket. The locking device, which is a part of the holder assembly, is fitted such that the helmet is secured firmly wherein the locking device locks the chin guard and the helmet rests on the fuel tank cap. This holder assembly is designed in such a manner that it allows other small articles to be carried in the present design easily. This mounting assembly reduces the stress experienced by the driver while riding the vehicle to a great extent even with the helmet attached to the holder assembly.

The holder assembly consists of two parts namely the holder attachment, which is mounted on the vehicle handle bar and the locking end that facilitates the locking and holding the helmet. The holder attachment part consists of means that either could fasten it to the handle bar permanently or in a retrofittable manner. The holder assembly is mounted centrally to the handle bar. The locking end consists of a locking system that secures the helmet and enables security locking through lock and key mechanism. The invention also comprises of a protecting layer around the fuel tank cap to protect in case of any remote chance of scratch arising out of the placement of helmet or any other utility.

Brief description of drawings

Figure 1 illustrates side view of a motorcycle with its accessories according to the prior art

Figure 2 illustrates the top view of a motorcycle showing the protecting layer around the fuel tank cap.

Figure 3 illustrates the top view of a motorcycle showing the protecting layer along with the helmet and the helmet holder

Figure 4 illustrates the helmet holder component along with a helmet

Figure 5 illustrates the helmet holder functioning

Detailed description of the invention

The present invention will now be described in detail with reference to the accompanying drawings. **Figure 1** is a side view of a motorcycle according to the prior art. The motorcycle comprises of a frame **101**, front fork **102**

attached to a pivot tube **103** of the vehicle frame **101**, a front wheel **104** attached to these front forks **102,** a handle bar **105** connected to the front forks **102**, a fuel tank **106** attached so as to straddle an upper part of the vehicle frame **101**, a seat **107** attached to the upper rear portion of the vehicle frame **101**, an engine unit **108** attached to the lower front section of the vehicle frame **101**, a swing arm **109** attached to a lower rear section of the vehicle frame **101**, suspended by a rear shock absorber **110** from the vehicle frame **101** and a rear wheel **111** attached to a rear end of swing arm **109**. The intake system **112** of the engine comprises of a carburettor, intake duct and an air cleaner. The exhaust system of the engine comprises of exhaust pipe and a muffler.

The motorcycle is also provided with a side cover **113** for covering a side section of the vehicle frame **101**, a seat cover for covering a rear section of the vehicle frame below the seat, a front fender **114** for covering an upper part of the front wheel **104**, and a rear fender **115** for covering an upper part of the rear wheel **111**.

Figure 2 illustrates the top view of the motorcycle showing the protecting layer **201** around the fuel tank cap **202**. This protecting layer **201** is a laminated plastic transparent sheet that is attached around the fuel tank **106** such that the layer covers the adjoining areas of the fuel tank cap **202** and prevents any possible chance of damages due to scratches arising out of the helmet **203** resting on the fuel tank **106**. Alternatively, a metal foil serving the same purpose could replace this plastic transparent sheet. The purpose of this protecting layer is not only to eliminate any chance of damage but also add to the aesthetics of the motorcycle.

Figure 3 illustrates the top view of a motorcycle showing the protecting layer **201** along with the helmet **203** and the helmet holder **301** wherein the helmet **203** is held on to the helmet holder **301** and rests on the fuel tank **106**. The helmet **203** is held such that the helmet holder **301** secures the front chin guard **302** and as a result it rests firmly on the fuel tank cap **202** and/or surrounding extended portions **201** in case the helmet size is big. The helmet **203** is held such that the helmet **203** can have offset with its set seating when the rider take turns, and as a result the riding is made smooth even when the helmet **203** is secured to the helmet holder **301**. The helmet holder assembly

301 is centrally mounted wherein the axis of holder assembly **303** passes through the handle bar assembly **105** and the steering nut **304**. This helps to maintain symmetry and balance and doesn't cause any possible damage to any part of the vehicle even during riding conditions with the helmet **203** secured. The securing can be done either in a retrofittable manner by having suitable means of fastening on the upper bracket nuts **305** or it could be permanently fastened to the upper bracket **305**. The locking device **306**, which is a part of the holder assembly **301**, is fitted such that the helmet **203** is secured firmly wherein the locking device **306** locks the chin guard **302** and the helmet **203** rests on the fuel tank cap **202**. This holder assembly **301** is designed in such a manner that it allows other small articles to be carried in the present design easily. This helmet holder mounting assembly **301** reduces the stress experienced by the driver while riding the vehicle to a great extent even with the helmet **203** attached to the holder assembly **301**.

Figure 4 and **Figure 5** illustrate the components involved in the helmet holder assembly **301**. Here the helmet holder **301** is designed such that the front portion locks the chin guard **302** of the helmet **203** while having the provision of a little offset movement angle of 30 degrees on either side facilitating the movement of helmet **203** when the motorcycle takes a turn. The helmet **203** shown here has a chin guard **302** along with the dust screen **402**. The holder assembly **301** consists of two parts namely the holder attachment **401**, which is mounted on the vehicle handle bar **105** along with a security locking means **403** and the locking end **306** that facilitates the locking and holding the helmet **203** consisting of a means for securing the helmet **405** and also having provision of facilitating its opening **406**. The holder attachment **401** part consists of means that either could fasten it to the handle bar **105** permanently or in a retrofittable manner. The holder assembly **301** is mounted centrally to the handle bar **105**. The locking end **306** consists of a locking system **405** that secures the helmet **203** and enables security locking through lock and key mechanism.

Although the subject matter has been described in considerable detail with reference to certain preferred embodiments thereof, other embodiments are

possible. As such, the spirit and the scope of the appended claims should not be limited to the description of the preferred embodiment contained therein.

Figure numbers associated with the invention

101. Frame assembly
102. Front fork
103. Pivot tube
104. Front wheel
105. Handle bar
106. Fuel tank
107. Seat
108. Engine unit
109. Swing arm
110. Rear suspension
111. Rear wheel
112. Intake system
113. Side cover
114. Front fender
115. Rear fender
201. Protecting layer
202. Fuel tank cap
203. Helmet
301. Helmet holder assembly
302. Front chin guard
303. Axis of the holder assembly
304. Steering nut
305. Upper bracket nuts
306. Locking device of the holder assembly
401. Holder attachment on the handle bar
402. Helmet screen
403. Key way on the holder assembly
404. Bolts for the holder assembly
405. Locking portion for securing helmet
406. Element for facilitating opening of the locking portion

2 6 FEB 2010

ORIGINAL

0509 /CHE/ 2010

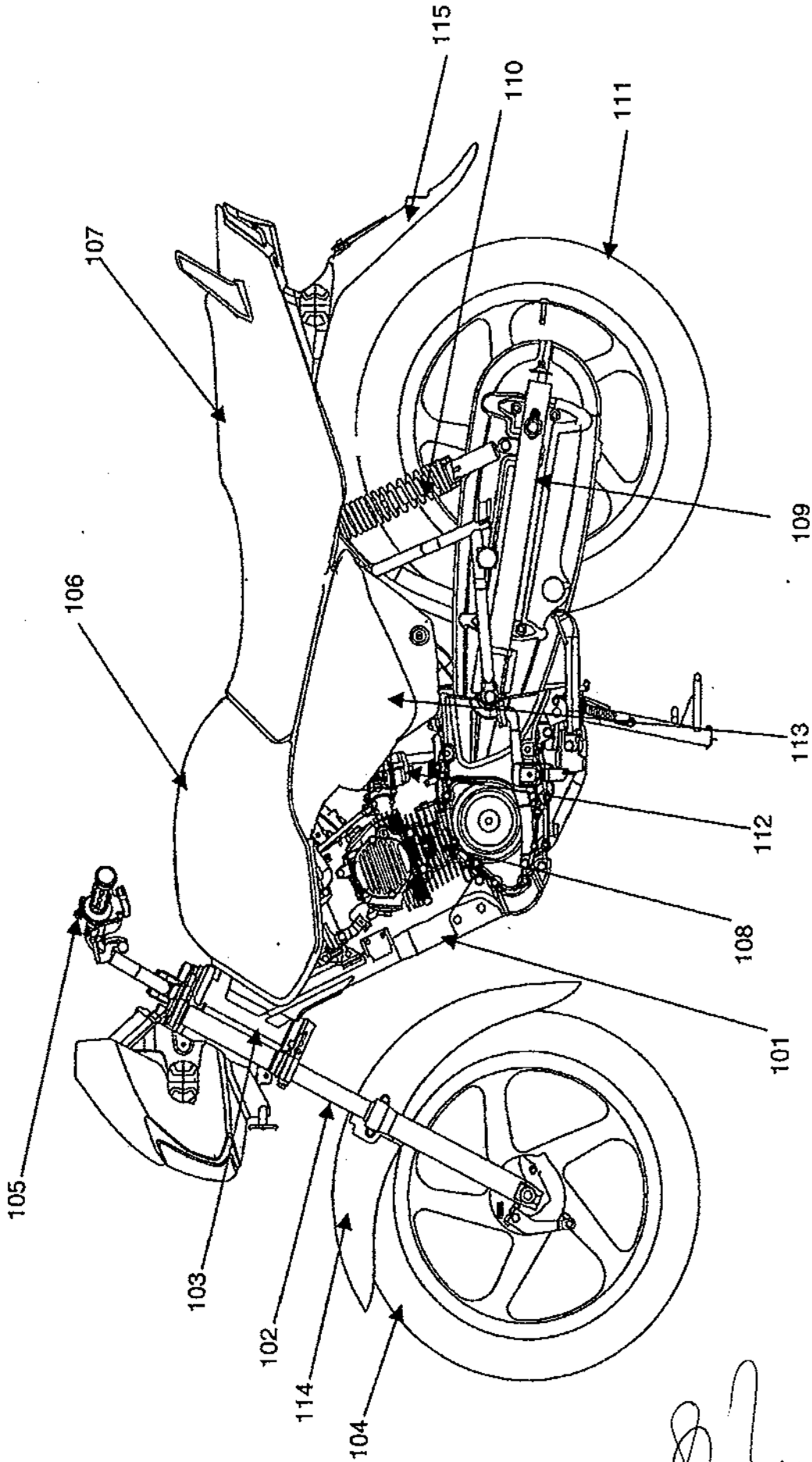

Figure 1

For TVS MOTOR COMPANY LIMITED

POST BOX NO. 4,
HOSUR-635 109.

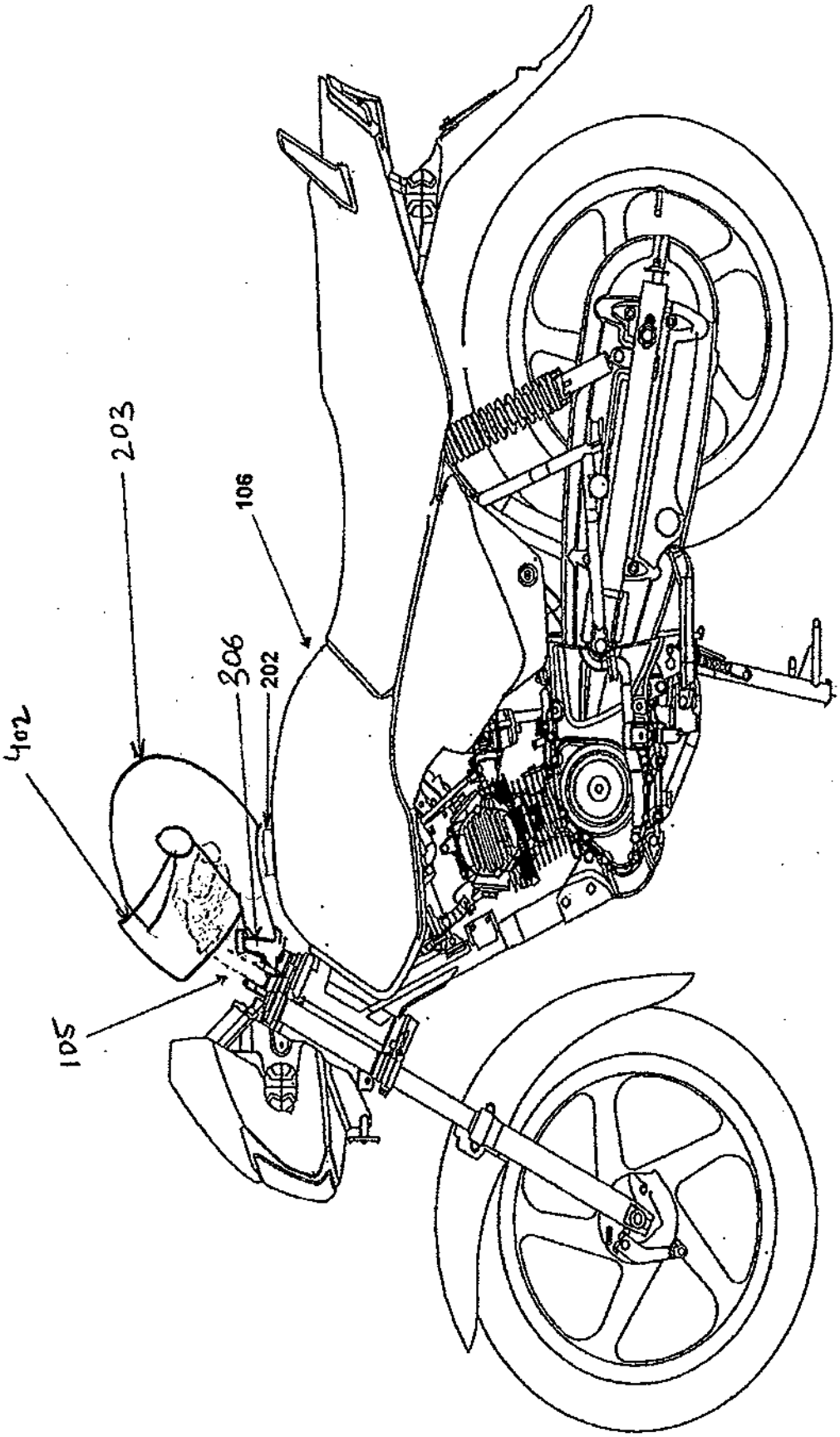

Figure 2

for TVS MOTOR COMPANY

TVS MOTOR COMPANY LIMITED
POST BOX NO. 4,
HOSUR,
HOSUR-635 109.

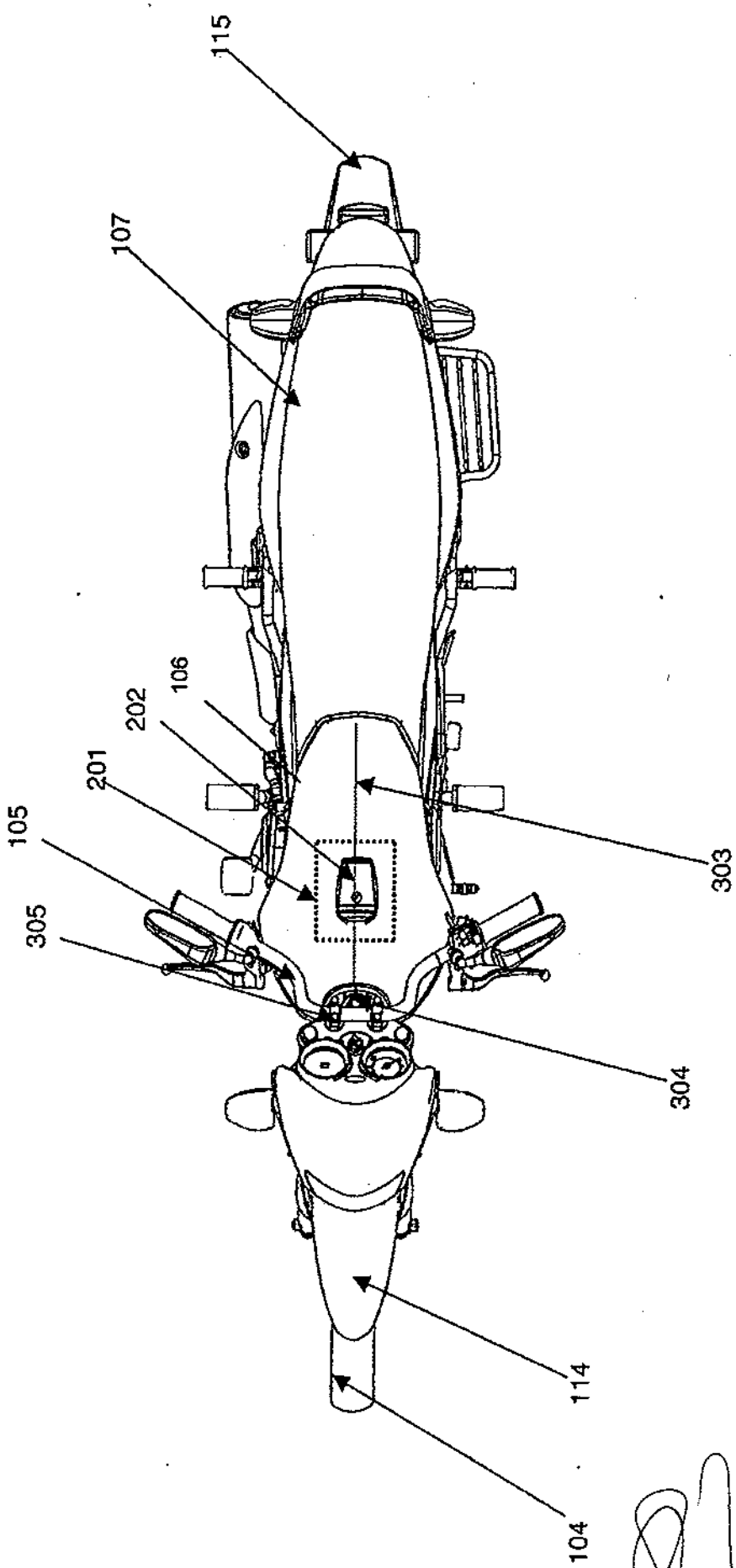

Figure 3

For TVS MOTOR COMPANY LIMITED

TVS MOTOR COMPANY LIMITED
POST BOX NO. 4,
HOSUR-635 109.

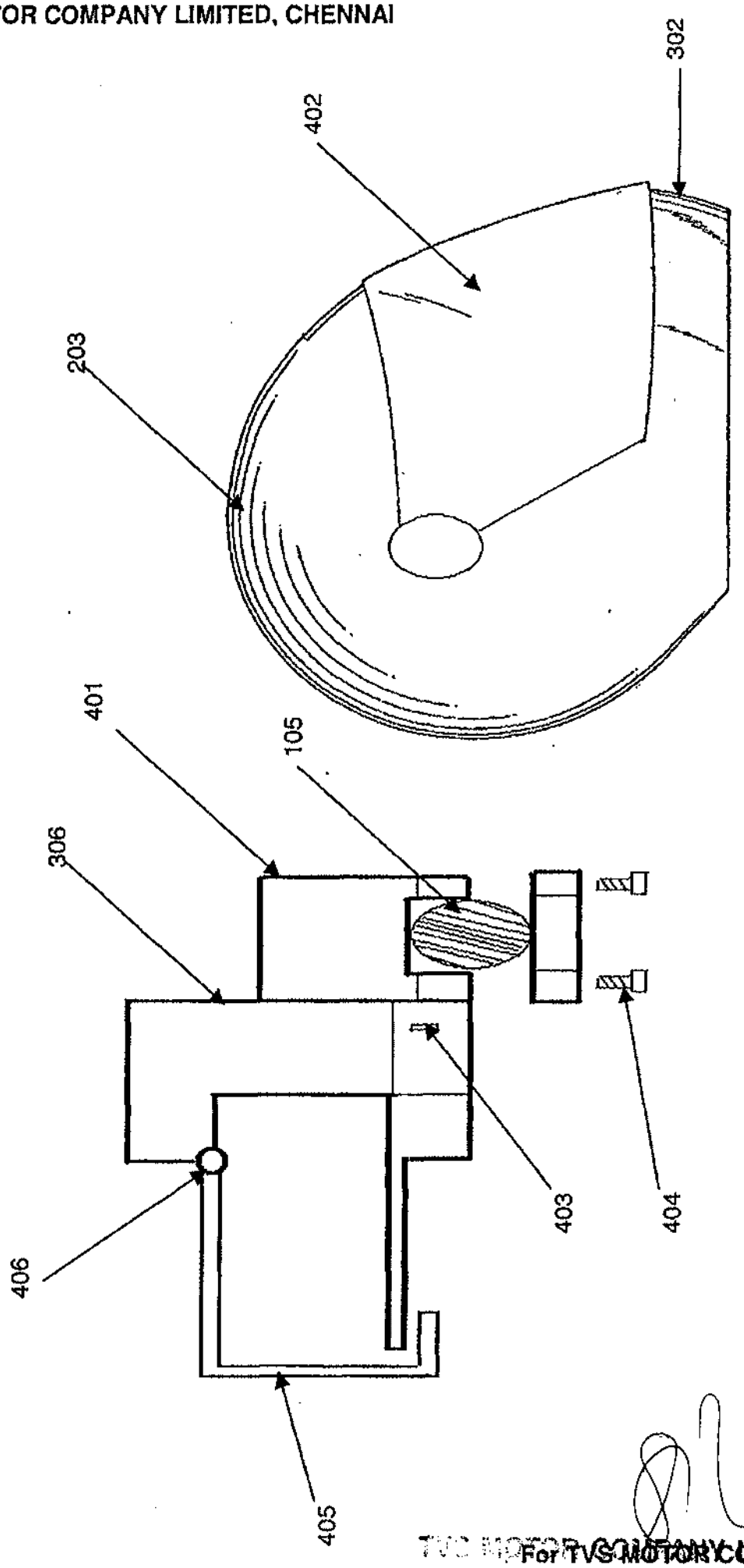

Figure 4

For TVS MOTOR COMPANY LIMITED

TVS MOTOR COMPANY LIMITED
POST BOX NO. 4,
HOSUR-635 109,

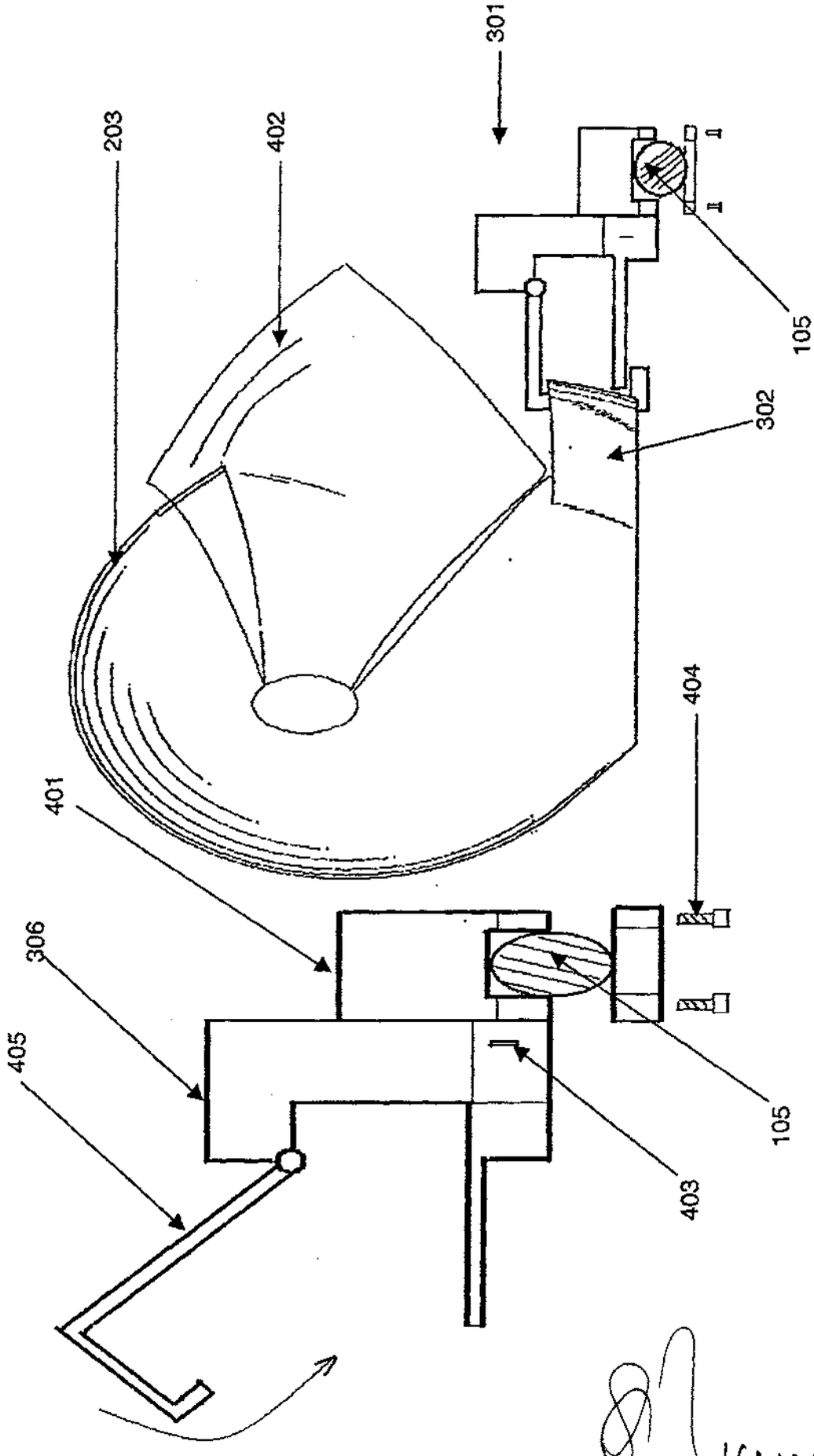

Figure 5

For TVS MOTOR COMPANY LIMITED

TVS MOTOR COMPANY LIMITED
BOX NO. 4,
HOSUR-635 109.