(12)Indian Patent Specification

---

(11) Patent Number: 365262 (21) Application Number: 3043/CHE/2011

(22) Filing Date: 05/09/2011 (43) Publication Date: 21/06/2013 (45) Grant announcement date: 25/04/2021

(71) Applicant(s): TVS MOTORS COMPLANY LIMITED

(72) Inventor(s): Singh, Om Prakash
Sreenivasulu, T
Patra, Soumya Prakesh
Rao, Kandregula Srinivasa

(51) International Classifications: H04N

(54) Title: COOLING APPARATUS MOUNTING FOR FANCOOLED INTERNAL COMBUSTION ENGINE

(57) Abstract: The present subject matter provides a construction of an axial fan (100) mounting system for a fan cooled internal combustion engine (10). The axial fan (100) is disposed subsequent to the cylinder head and cylinder block. The mounting system has mounting brackets (125, 130) equipped to hold the axial fan (100) to draw cool ambient air and guide it axially to pass it over the engine (10). The apparatus is further equipped with gearing system (160, 165) to blow out the air at a stipulated speed for effective heat evacuation.

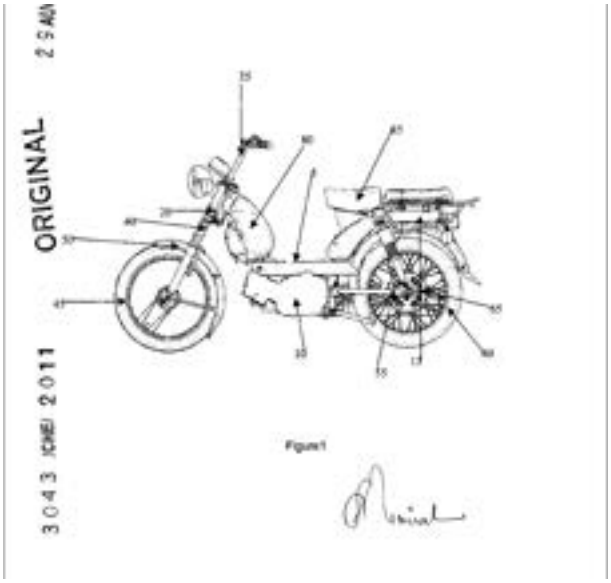

700224236

Abstract

A COOLING SYSTEM FOR AN INTERNAL COMBUSTION ENGINE

The present subject matter provides a construction of an axial fan (100) mounting system for a fan cooled internal combustion engine (10). The axial fan (100) is disposed subsequent to the cylinder head and cylinder block. The mounting system has mounting brackets (125, 130) equipped to hold the axial fan (100) to draw cool ambient air and guide it axially to pass it over the engine (10). The apparatus is further equipped with gearing system (160, 165) to blow out the air at a stipulated speed for effective heat evacuation.

<To be published with Figure 2>

For TVS MOTOR COMPANY LIMITED

R NAGARAJAN
General Manager - IP Compliance

14-May-2019/40573/3043-CHE-2011/Abstract

PATENT OFFICE CHENNAI 15/05/2019 11:03

700224235

We claim:

1. A cooling system for an internal combustion engine (10) comprising:

a shroud (250), said shroud (250) configured and contoured to cover the cooling system wherein said shroud (250) guides air over the engine (10) for efficient cooling;

an axial fan (100), said axial fan (100) having a plurality of circumferentially spaced, radially extending blades; and

a plurality of shafts (105, 135), said plurality of shaft includes a crankshaft (135) and a camshaft (105);

characterized in that,

said axial fan (100) is placed subsequent to a cylinder head and a cylinder block, and said axial fan (100) is mounted on a fan shaft (175) operatively connected to a secondary gear (165), wherein said axial fan (100) rotates at at least half the speed of the crankshaft (135) of said engine (10) to provide optimum cooling;

a primary gear (160) is connected to the camshaft (105) through a primary gear shaft (170), said primary gear shaft (170) is mounted with said primary gear (!60), and the secondary gear (165) is connected to the fan shaft (175) of *the axial fan (100), wherein said primary gear (160) and said secondary gear* (165) are in continuous mesh, therefore to rotate the axial fan (100) at a stipulated speed prescribed by cooling system, said primary gear shaft (170) is protruding from the cylinder head thereupon, wherein the primary gear shaft (170) receives torque from the camshaft (105) and provides the rotational force to said axial fan (100); and

a pair of mounting brackets including a vertical mounting bracket (125) and a horizontal mounting bracket (130) forming mounting arrangement for cooling system of said engine (10), wherein said pair of the mounting brackets (125, 130) hold the cooling system as well as configure a position of the cooling system as per the cooling need of the engine (10).

2. The cooling system for the internal combustion engine (10) as claimed in Claim 1, wherein said primary gear (160) is having a diameter twice that of said secondary gear (165).

3. The cooling system for the internal combustion engine (10) as claimed in Claim 1, wherein said cooling system is preferentially suited for single speed gear

PATENT

14-May-2019/40573/3043-CHE-2011/Claims

motor vehicles whereas to keep the speed of said axial fan (100) at prescribed rate for optimal cooling.

4. The cooling system for the internal combustion engine (10) as claimed in Claim 1, wherein said axial fan (100) has an axis substantially coaxial with an air inlet axis of the cooling system.

5. A mounting system for a cooling system comprising:

a pair of mounting brackets (125, 130), said pair of mounting brackets (125, 130) includes:

a vertical mounting bracket (125) containing an axial fan (100) and said vertical mounting bracket (125) having two parallel flanges for fastening said mounting bracket (125) with an engine block of said engine (10), said vertical mounting bracket (125) is capable of being positioned in accordance to cooling need and configuration; and

a horizontal mounting bracket (130) with designated shape is configured in between fins of said engine (10) through a parallel flange(s), wherein said horizontal mounting bracket (130) accommodates a secondary gear thereupon, and a position of the horizontal mounting bracket (130) can be flexibly varied to meet the cooling needs in between the fins of said engine (10) or on other engine mounting means.

6. The mounting system as claimed in Claim 4, wherein the mounting brackets (125, 130) are generally made of metal, alloys or may be made from other suitable engineering materials.

Dated this 29th day of August 2012 .

R Nagarajan

General Manager – IP Compliance

TVS Motor Company Limited

14-May-2019/40573/3043-CHE-2011/Claims

PATENT OFFICE CHENNAI 15/05/2019 11:03

Cooling apparatus mounting for fan-cooled internal combustion engine

Field of the invention:

The present invention relates to cooling system of internal combustion engine for motor vehicles and more specifically it relates to a novel and improved construction of a mounting for a cooling apparatus for adequately cooling the fan cooled single speed geared motor vehicle engine.

Background of the invention:

Motor Vehicles, such as motorcycle, scooter and three wheelers employ internal combustion as prime movers. Internal combustion engines generate enormous amount of heat during operation a part of which is dissipated into the atmosphere. It is known in the prior art that the temperature range during an engine operation may vary greatly depending upon the operating conditions. Hence it is important to keep the engine temperature within the necessary limit. So the said engine is provided with cooling fins integrated around the engine cylinder(s) to dissipate accumulated heat from the engine generated from combustion and due to friction of moving parts. These cooling fins increase the surface area coming in contact with the air and therefore help in engine cooling. Further to cool and protect engine, engine-cooling systems are also provided. The engine cooling system may includes a fan and a shroud in case of an air-cooled engine for directing the air

These air cooling system rely on flow of air over the engine casing through a fan which directs cool ambient air across the engine with the support of the shroud structure and mounting orientation. Shroud means are employed to guide the air and improve the efficiency of the fan and to prevent the re-circulation of air, whereas the mounting system is employed to orient fan in a preferable position to facilitate cooling of the internal combustion engine. But inefficient engine performance and failure of engine components have been observed due failure of heat transfer from the engine.

These kind of air-cooled engines are crippled with several adversaries, such as significant pressure drop in shroud, lower cooling efficiency and huge losses due to friction. Another demerit, which makes this system more taxing for both customers and manufacturer, is that the mounting system and other ancillaries are not adaptable and flexible for the cooling needs.

Hence to eliminate the inadequacies aforementioned, the present invention provides mounting system for a fan-cooled internal combustion engine that addresses the lacuna in the prior art and facilitates easy assembling and fitment of the fan and mouting system

Summary of the invention:

The subject of the invention is a mounting system for an air cooled engine, equipped with an axial fan. It is therefore an object of the present invention to provide an improved, compact cooling system for an internal combustion engine and further, in the view of aforementioned demerits, is to enhance the efficiency

of the cooling system and at large contribute to increased engine efficiency. The present invention, in accordance with one embodiment thereof, involves an axial fan placed near the engine head and block instead of crankshaft through the newly fangled mounting system. It is also an object of this invention to control the fan speed by using a gear system so as to provide efficient cooling. Another aspect of the present invention involves a fan cooled engine including means for directing air axially toward cylinder head and reducing the pressure drop along the air path for better cooling efficiency. Further secondary objects, of the newfangled device is to curtail the path of air to sustain energy level of air and smoothen the process of fitting, mating and dismantling. Further scope of applicability of the present invention will become apparent from the detailed description given hereinafter. However, it should be understood that the detailed description and specific examples, while indicating preferred embodiments of the invention, are given by way of illustration only, since various changes and modifications within the spirit and scope of the invention will become apparent those skilled in the art from this detailed description.

Brief Description of the Drawings:

Figure1 : Pictorial view of a motorcycle

Figure2 : Schematic layout of the mounting apparatus in accordance with preferred embodiment.

Figure 3 : Displays the perspective view of the gearing system with one mounting bracket incorporating the same.

Figure 4 : Displays a pair of drawing, where Figure 4(a) is a layout of the vertical mounting bracket arrangement and Figure 4(b) is the perspective t view of the vertical mounting bracket.

Examples of the most important features of the invention, thus been summarized rather broadly in order that the detail description and claims appended thereof, that follows may be better understood, and in order that the contributions to the art may be better appreciated. There are, of course, additional features of the invention that will be described hereinafter. These and various other characteristics and advantages of the present invention will be readily apparent to those skilled in the art upon reading the following detailed description of the preferred embodiments of the invention and by referring to the accompanying drawings.

Before any embodiments of the invention are explained in detail, it is to be understood that the invention is not limited in its application to the details of construction and the arrangement of components set forth in the following description or illustrated in the following drawings. The invention is capable of other embodiments and of being practiced or of being carried out in various ways. Also, it is to be understood that the phraseology and terminology used herein are for the purpose of description and should not be regarded as limiting. The use of "including," "comprising," or "having" and variations thereof herein is meant to encompass the items listed thereafter and equivalents thereof as well as additional items. Unless specified or limited otherwise, the terms "mounted,"

"connected," "supported," and "coupled" and variations thereof are used broadly and encompass both direct and indirect mountings, connections, supports, and couplings. Further, "connected" and "coupled" are not restricted to physical or mechanical connections or couplings.

The particulars and configuration discussed in the following non-limiting description can be varied and is cited merely to illustrate at least one embodiment and is not intended to limit the scope thereof.

Detailed description of the preferred embodiment of invention:

The present invention is described herein as including a four-stroke single cylinder engine with single speed gear. The reference is made only to the present embodiment (i.e. single cylinder engine) and before any embodiments of the invention are explained in detail, it is to be understood that the invention is not limited in its application to the details of construction and the arrangement of components set forth in the following description or illustrated in the following drawings. The invention is capable of other embodiments and of being practiced or of being carried out in various ways.

Features, advantages and objects of the present invention will be understood and appreciated by those skilled in the art by reference to the following description and Figures. The present invention will now be described in detail with reference to the accompanying drawings, wherein the same reference numerals will be used to identify the same or similar elements through out several views. It should be noted that the drawings should be viewed in the

direction of reference numerals. It is to be understood that words describing directions such as "right", "left", "upper", "lower" or like terms, are used herein with reference to illustrated states in drawings or in actually usable state of vehicle control device.

The objects, features and advantages of the present invention will become apparent and clear from following description read in conjunction with accompanying drawings (i.e. Figure 1 to 4) in which reference numerals designates same element. One of the preferred embodiment is shown in Figure 2 to 4.

Figure 1 is a side view of a typical single speed gear motorcycle type vehicle having step through space 5 provided with an engine in accordance with an embodiment of present invention. In this embodiment, a single speed gear motorcycle type vehicle with step though space 5 (hereinafter referred as motorcycle through out the document for expediency and to maintain brevity) is described as an example of a vehicle for an embodiment of the present invention.

Numeral 1 designates the motorcycle equipped with engine 10. Further as shown in Figure 1, a main frame 15 extending longitudinally is disposed at the rear of head pipe 20. The main frame is connected to backstay 25 and seat rail 30, where in mainframe 15, head pipe 20, backstay 25 and seat rail 30 combines to form the vehicle body. Handlebars 35 are rotatably attached to the top of the head pipe 20. A pair of front fork 40 having suspension for absorbing vertical

shock is disposed below the handle bar 35. A front wheel 45 is rotatably mounted at the lower end of the front fork 40. A front fender 50 is disposed above the front wheel 45. The front end of swing arm 55 is attached to the rear end of the mainframe 15. A rear wheel 60 is rotatably mounted at the rear end of the swing arm 55.A driven sprocket 65 is attached to rear wheel 60 so as to rotate together with the rear wheel 60. The drive chain (not shown in Figure), is meshed with driven sprocket 65. The drive chain is configured to be driven by a drive sprocket (not shown in Figure) of the engine 10. The engine 10 is mounted on the main frame 15 by know means. A muffler (not shown in Figure) is connected to the engine 10. A fuel tank 80 is disposed on the top of mainframe 15. A seat 85 is disposed on the top of the seat rail 30.

Those skilled in the art will appreciate that the vehicle shown in Figure 1 is a single example and the present invention is not limited to application to any one particular bike size, type, or manufacturer. It can also be appreciated that although the cooling system mounting arrangement presented herein is preferred for smaller displacement engines, such as those powering motorcycles, all-terrain vehicles, scooters, and three wheeled vehicles, the system is adaptable to all other vehicles unless not restricted.

Figure 2 exhibits a planned pictorial view of the preferred embodiment wherein an axial fan 100 is operably mounted on a camshaft 105 with the help of a gear system 110 shown in detail in Figure 3. The axial fan 110 is mounted near the engine head 4 and block 3 through mounting system 150 via mounting brackets 125 and 130 (mounting system is described in detail in Figure 4). The proximity

of the axial fan 100 with the engine increases the cooling efficiency. When axial fan 100 rotates, it sucks air in the axial direction and moves parallel to the camshaft105 about which the fan rotates. The cooling air directly sees the engine 10 hot surfaces as can be seen from the Figure. The axial fan 100 in the present invention may operate in the presence or absence of a shroud. If the shroud is present, the fan will suck in air in the axial direction and the sucked air directly cools the engine 10 portion. Because the air path length is reduced, the pressure drop is also minimized leading to improvement in cooling efficiency.

Usually the camshaft 105 rotates at one-half of the rate of rotation of crankshaft 135. This 2: 1 speed relationship is necessitated by the four-cycle nature of the engine. Since camshaft 105 speed is half the crankshaft135 speed, axial fan 100 mounted to the camshaft105 also rotates at half the crankshaft speed i.e. it rotates at half of the engine speed. When higher cooling rates are desired, low fan speed can compromise cooling efficiency. Hence to bring the fan speed as that of crankshaft speed, two gears are used. Hence axial fan mounting system that facilitate the use of axial fan close to the engine for higher cooling efficiency; lesser power requirement for the given flow rate and engine temperature reduction. Further the Figure 2 designates a shroud 250, which acts as a covering means for the cooling system as well as engine 10. Numeral 270 in the Figure 2 is bestowed to t he crankcase

Now referring to Figure 3 for elucidation of gear system. The gear system consists of a primary gear 160 and a secondary gear 165. The primary drive gear

160 is connected to the camshaft 105 through the primary drive gear shaft 170. The secondary driven gear 165 is connected to a shaft on which the said axial fan 100 is mounted. The two gears are meshed with each other so that their teeth are in direct contact with each other. Secondary driven gear 165 has half the number of teeth than primary drive gear 160. Since gear ratio is halved, speed is doubled. The axial fan 100 is mounted on the driven shaft 175 and hence its speed becomes equal to that of crankshaft. Shaft on which fan and the drive gear are mounted contains a ball bearing 180. Similar ball bearing 185 is also used on shaft, which is connected to the camshaft 105. This gear system is mounted in the vicinity of the cylinder head and cylinder block through two mountings (i.e. mounting system). Mounting bracket 130 (i.e. horizontally oriented bracket) is shown in Figure 3, wherein said mounting bracket 130 fits in between pair of fins integrated to the cylinder block through its fastening mechanism. Position of this mounting bracket can be varied whereas the said mounting bracket 130 can be inserted horizontally in between any two fins of cylinder block as per the cooling need of the engine. This horizontal mounting bracket helps substantially in attenuating vibration for the present invention. Further variable positioning of the horizontal mounting makes the present invention flexible and adaptable of variety of internal combustion engine.

Referring to Figure 4, the Figure creases out the vertical mounting bracket 125 mounted on the engine. Figure 4(a) shows the layout of the mounting bracket 125 and Figure 4(b) demonstrates the structure of the mounting bracket 125. Figure 4(a) shows primary gear 160 ,secondary gear 165 and mounting bracket

125 mounted with axial fan 100.Figure 4 (b) depicts the structure of the mounting bracket 125 with ball bearing 180 accommodated in it to connect the fan shaft and further it shows two apertures 195 and 200 one on each flange(205 and 210) of the mounting bracket 125 to connect it with the cylinder block or cylinder head as per the cooling requirement and in accordance with the positioning of horizontal mounting bracket 130.

29 AUG 2012
ORIGINAL
3043 /CHE/ 2011

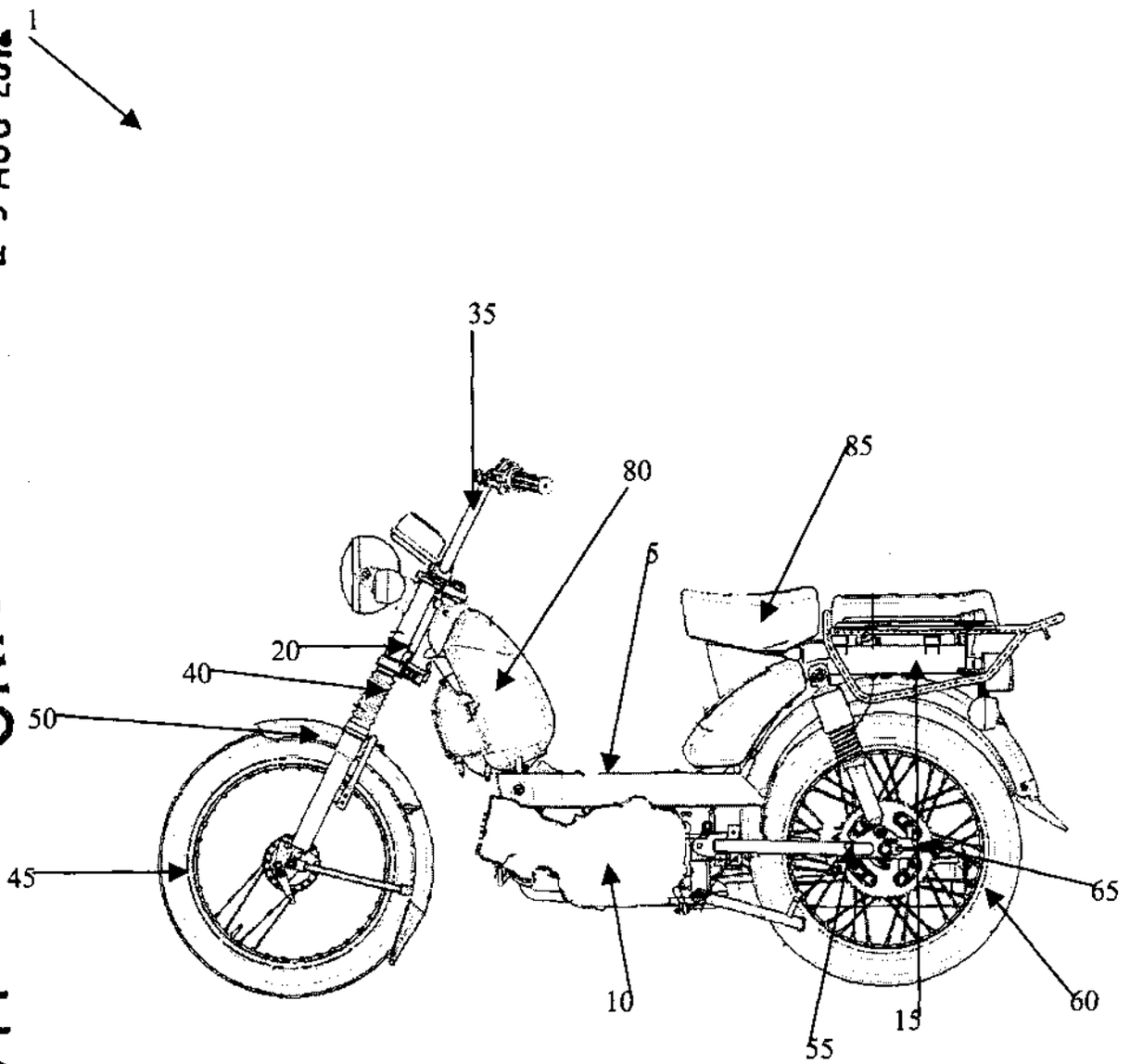

Figure1

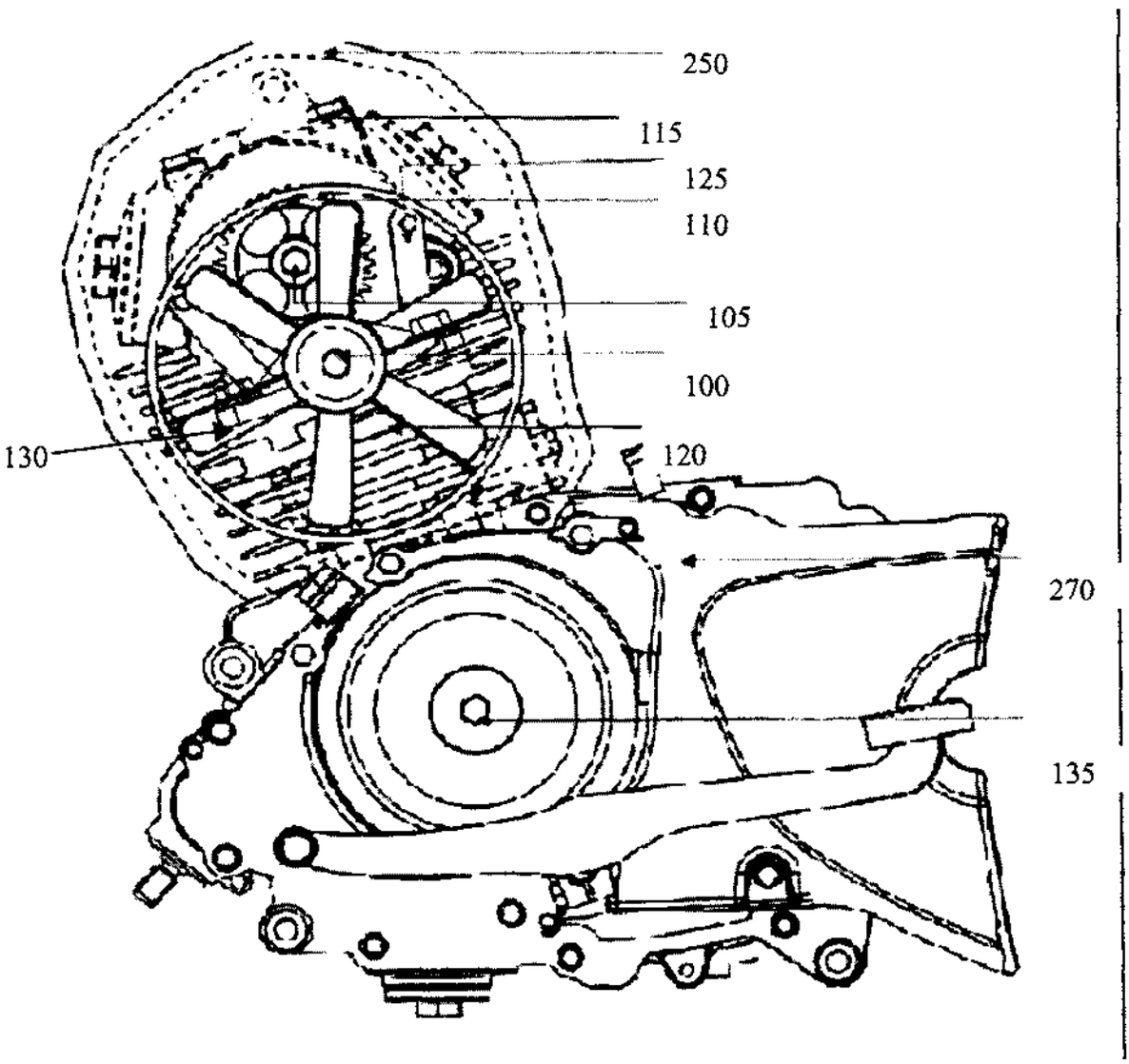

Figure 2

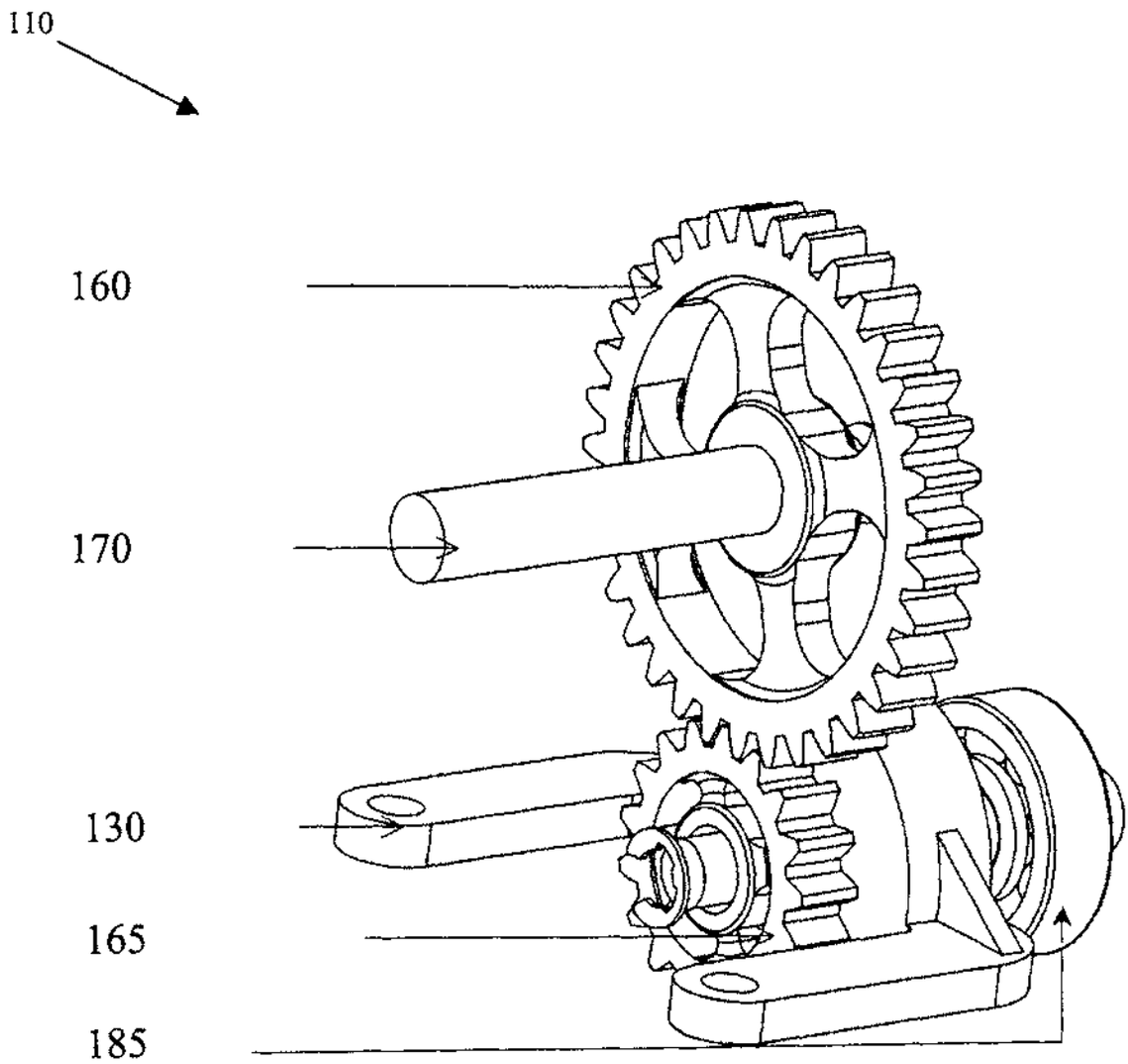

Figure 3

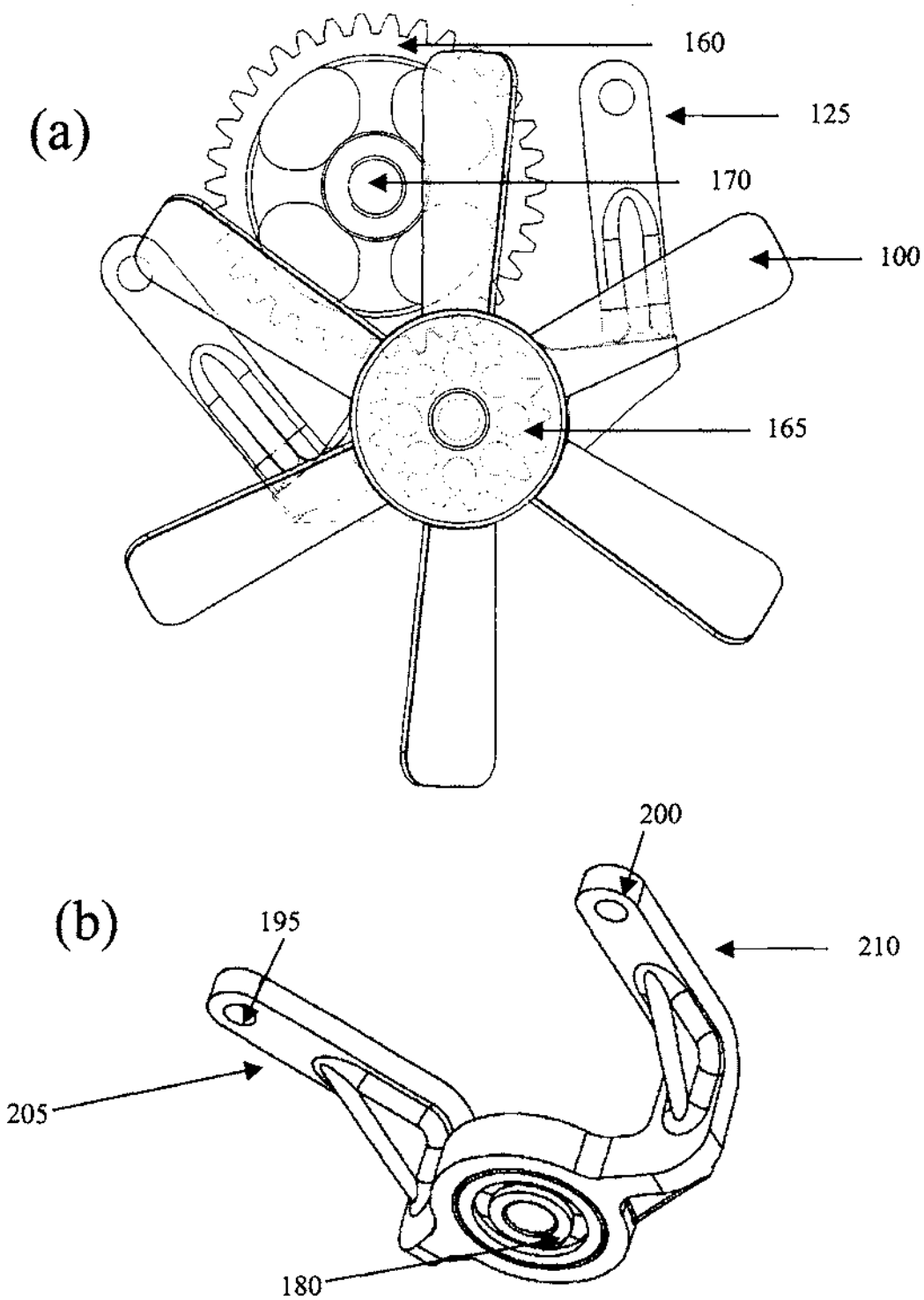

Figure 4