(12)Indian Patent Specification

(11) Patent Number: 370589 (21) Application Number: 201621000467

(22) Filing Date: 06/01/2016 (43) Publication Date: 17/11/2017 (45) Grant announcement date: 29/06/2021

(71) Applicant(s): ENDURANCE TECHNOLOGIES LIMITED

(72) Inventor(s): Kharul, Ravindra
Patra, Soumya Prakash
Tribhuwan, Rahul
Shinde, Bhatu Gorakh

(51) International Classifications: B60G 17/015 B60G 17/027

(54) Title: PRELOAD ADJUSTMENT FOR THREE WHEELED VEHICLE SUSPENSION.

(57) Abstract: A preload adjustment system for a wheeled vehicle suspension comprising a shock absorber (102) having a coil spring (105), a preload cylinder (103) mounted between said shock absorber (102) and said coil spring (105), an adjuster mechanism (108) and an input mechanism (112) for adjusting preload of said three wheeled vehicle suspension. The adjuster mechanism (108) comprises, a controller (113), a motor (114) driving said preload cylinder (103) associated with said shock absorber (102) through a fluid reservoir (115) with a piston (116). The preload adjustment system disclosed can be easily provided in a three wheeled motor vehicle. It is easy to access and operate and improves user comfort in all road conditions.

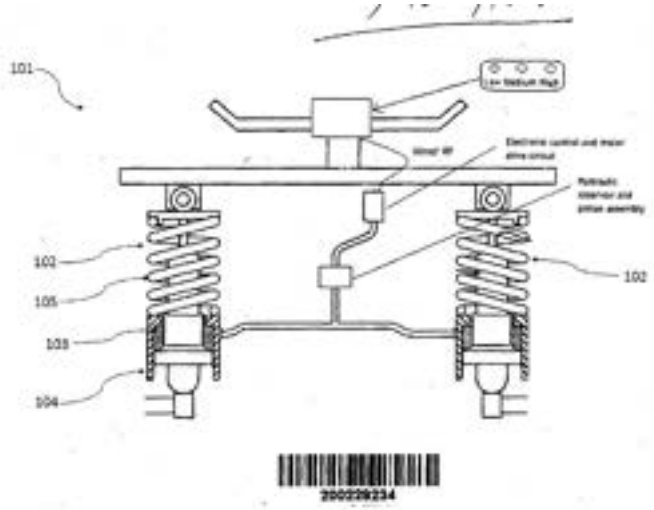

Figure 1

Abstract

Preload adjustment system for a three wheeled vehicle suspension

A preload adjustment system for a wheeled vehicle suspension comprising a shock absorber (102) having a coil spring (105), a preload cylinder (103) mounted between said shock absorber (102) and said coil spring (105), an adjuster mechanism (108) and an input mechanism (112) for adjusting preload of said three wheeled vehicle suspension. The adjuster mechanism (108) comprises, a controller (113), a motor (114) driving said preload cylinder (103) associated with said shock absorber (102) through a fluid reservoir (115) with a piston (116). The preload adjustment system disclosed can be easily provided in a three wheeled motor vehicle. It is easy to access and operate and improves user comfort in all road conditions.

(Refer Figure 1 for the invention)

Endurance Technologies Limited.

Soumya Prakash Patra
Manager IP Cell

Claims

We claim:

1. A preload adjustment system for a three wheeled vehicle suspension comprising of
   - a shock absorber (102) having a coil spring (105),
   - a preload cylinder (103) mounted between said shock absorber (102) and said coil spring (105),
   - an adjuster mechanism (108),
   - a controller (113), and
   - an input interface (112) for adjusting preload of said three wheeled vehicle suspension,

   characterised by,

   - the controller (113) connected to a motor (114); said motor (114) driving the preload cylinder (103) associated with said shock absorber (102) through a fluid reservoir (115) with a piston (116); and
   - the input interface (112) is connected to the controller (113) through a means selected from wired connections and wireless connections.

2. The preload adjustment system for a three wheeled vehicle suspension as claimed in claim 1, wherein said fluid reservoir (115) of adjuster mechanism (108) is connected to the internal chamber of said preload cylinder (103) by at least a hydraulic line.

3. The preload adjustment system for a three wheeled vehicle suspension as claimed in claim 2, wherein said input interface (112) is mounted in the vicinity of the instrument panel of said three wheeled vehicle.

4. The preload adjustment system for a three wheeled vehicle suspension as claimed in claim 1, wherein the controller (113) is embedded with a closed loop feedback system with shaft encoder for determining current position of said piston (116), which drives said motor (114) for preload adjustment.

5. The preload adjustment system for a three wheeled vehicle suspension as claimed in claim 1, wherein said piston (116) as operated by a pinion mechanism (117).

6. The preload adjustment system for a three wheeled vehicle suspension as claimed in claim 5, wherein said pinion mechanism (117) is operated through a means (120) selected from mechanical arrangement and electric means.

Dated this 22nd day of October 2016

Sahastrarashmi Pund
Head – IPR
Endurance Technologies Ltd.

To,
The Controller of Patents,
The Patent Office, at Mumbai

101/420-70/2016.

200229231

Field of the invention

The present invention relates to a preload adjustment system for a three wheeled vehicle suspension and more particularly to an easy preload adjustment for three wheelers carrying various range of loads. The interface for easy adjustment for the preload is provided at a suitable location in the vehicle.

Description of the prior art

The mass of a conventional three wheeler carrying either goods or people greatly influences the suspension response of a vehicle. The load distribution on its rear wheel significantly affects the response to load variations on the vehicle such as a three wheeler. The change in vehicle weight arises due to addition of either number of occupants or increase in material load. In light weight vehicles such as a three wheeler or low power four wheelers, the change in sprung mass of the vehicle is significant as a result of such variations stated above. The mass suspended over the springs is referred as sprung mass and the mass below the spring is referred to as un-sprung mass. The ratio of the sprung mass to the overall mass of the vehicle is altered significantly, which in turn affects the vehicle's dynamic behavior. For rider comfort, and for proper handling of the vehicle, it is very much important that the ratio of sprung mass to the overall mass of the vehicle should be as low as possible.

The front forks of the vehicle have less demand in terms of providing isolation from road induced shocks or vibrations to the rider as well as pillion. The major portion of the riders and pillion's weight or weight of the goods is distributed to a rear shock absorber. Thus in three and low powered four wheelers, the rear shock absorbers plays a huge role in isolating the occupants from the road induced vibrations and shocks. Few patents have been filed in this regard, such as US 4159105. It relates to a device for modifying a shock absorber so that the preload of the shock absorber spring may be adjusted. Similarly, CN203473156 also provides

21-Oct-2016/32234/201621000467/Description(Complete)

IPO MUMBAI 21-10-2016 12:44

a solution, wherein a Tricycle frame is provided with rear suspension of cylinder-type shock absorption type. Similarly, US 20040256778 is provided for controlling the preload of the suspension spring.

However, the current art doesn't provide an optimum and easily implementable pre-load adjustment catering to variations of load on such vehicles.

Therefore, the main object of the present invention is to optimize the spring preload in rear shock absorbers to provide a comfortable ride and ease in ride control of the vehicle.

Another objective of the present invention is to provide a preload adjustment system that provides quick means for adapting to the load condition.

Another objective of the present invention is to provide a preload adjustment system having ease of access and ease of operation.

Summary of the invention

The suspension system includes a shock absorber mounted between a wheel and a vehicular body. The shock absorber has a preload cylinder. The preload cylinder is mounted between a shock absorber housing and a coil spring. The preload cylinder illustrates about a shock absorber as known in the prior art. The outer wall of the preload cylinder is spaced apart from the shock absorber to form an internal chamber. The spring provides a control over the ride characteristics of the shock absorber. The spring force of the spring can be adjusted to adjust the initial preload force by hydraulic fluid within the preload cylinder. The hydraulic fluid allows the spring to expand or causes the spring to contract to adjust the preload force.

An adjuster mechanism is provided herein. The adjuster mechanism has an input interface namely three switches such as low, medium, high corresponding to low weight, medium weight and high weight scenario. The switches are connected to a controller either through wired

IPO MUMBAI 21-10-2016 12:44

21-Oct-2016/32234/201621000467/Description(Complete)

connections or through radio frequency interface. The controller is connected to a motor driving a preload cylinder associated with a pair of shock absorbers through a fluid reservoir with a piston. The fluid reservoir is connected to the internal chamber of preload cylinders by a hydraulic line. Thus, by selecting an input, the controller gets a signal on the amount of variation to be effected on the preload chamber and consequently drives the motor for operating the piston. Thus, the relative amount of fluid in the preload chambers can be varied. As the fluid in the internal chambers is varied, the position of the spring preload chamber changes, and hence the length of the spring changes giving change in preload.

Brief description of the drawings

Figure 1 illustrates a suspension system for three wheelers according to the present invention.

Figure 2 illustrates a shock absorber and preload cylinder according to the present invention.

Figure 3 illustrates a block view of the adjuster mechanism of the present invention.

Figure 4 illustrates the close loop system according to the present invention.

Figure 5 illustrates a pinion mechanism for adjuster mechanism according to present invention.

Detailed description of the present invention

Figure 1 illustrates a suspension system 101 in a three wheeled vehicle. The suspension system 101 includes a set of shock absorbers 102 mounted between a wheel and a vehicle body. The shock absorbers have a preload cylinder 103. The preload cylinder 103 is mounted between a shock absorber housing 104 and a coil spring 105. Figure 2 illustrates about a shock absorber. The outer wall 106 of the preload cylinder is spaced apart from the shock absorber to form an internal chamber 107. The spring 105 provides a control over the ride characteristics of the shock absorber. The spring force of the spring 105 can be adjusted to adjust the initial preload

21-Oct-2016/32234/201621000467/Description(Complete)

IPO MUMBAI 21-10-2016 12:44

force by hydraulic fluid within the preload cylinder chamber 107. The hydraulic fluid allows the spring 105 to expand or causes the spring to contract to adjust the preload force.

An adjuster mechanism 108 is provided as referred in Figure 3. The adjuster mechanism 108 has an input interface or switches 112 namely three switches such as low 109, medium 110, and high 111 corresponding to low weight, medium weight and high weight scenario. The switches 112 are connected to a controller 113 either through wired connections or through radio frequency interface. The controller 113 is connected to a motor driving a preload cylinder 114 associated with a pair of shock absorbers through a fluid reservoir with a piston 116. The fluid reservoir 115 is connected to the internal chamber of preload cylinders 103 by a hydraulic line. Thus, by selecting an input, the controller 113 gets a signal on the amount of variation to be effected on the preload chamber 103 and consequently drives the motor 114 for operating the piston 116. Thus, the relative amount of fluid in the preload chambers 103 can be varied. As the fluid in the internal chambers 103 is varied, the position of the spring preload chamber 103 changes, and hence the length of the spring changes giving change in preload.

The input interface can be installed anywhere in the vehicle, such as on the instrument panel, or near the seat, etc. The total system is a close looped where the user gets the information on actual change of preload that happened in the shock absorber (Figure 4). In closed loop system a shaft encoder is used to know current position of piston in hydraulic chamber. In above system, microcontroller based drive circuit is used to driver motor to the specified level. Near to adjuster mechanism of figure (3) a shaft encoder is mounted, which gives feedback in form of pulses. Each pulse has relations with displacement of piston. A software algorithm is capable enough to correlate between demand, actual position & motor driving logic.

Another embodiment of the adjuster mechanism can be observed from Figure 5. Figure 5 illustrates a pinion mechanism 117 to operate the piston 118 in the fluid reservoir 119. The

IPO MUMBAI 21-10-2016 12:44

21-Oct-2016/32234/201621000467/Description(Complete)

pinion is operated by suitable means 120 such as a knob mounted at a suitable position such as on the instrument panel or on the chassis. The rotation of the knob operates the piston in the fluid chamber which drives the internal chamber of preload cylinders that is connected by a hydraulic line. Thus preload of the spring can be availed by rotation of the knob. A locking mechanism is also provided for smooth operation of the adjuster.

While considerable emphasis has been placed herein on the components and component parts of the preferred embodiments, it will be appreciated that many embodiments can be made and that many changes can be made in the preferred embodiments without departing from the principles of the invention. These and other changes in the preferred embodiment as well as other embodiments of the invention will be apparent to those skilled in the art from the disclosure herein, whereby it is to be distinctly understood that the foregoing descriptive matter is to be interpreted merely as illustrative of the invention and not as a limitation.

Brief description of the numerals used:

101 Suspension system

102 Shock absorber

103 Preload cylinder

104 Shock absorber housing

105 Coil Spring

106 Outer wall of preload cylinder

107 Internal chamber

108 Adjuster Mechanism

109 Low indicating Switch

110 Medium indicating Switch

111 High indicating switch

112 Switches

113 Electronic Control System

114 Motor Driver Preload Cylinder

115 Fluid Reservoir

116 Piston

117 Pinion Mechanism

118 Piston

119 Fluid reservoir

120 Suitable means for operating pinion

21-Oct-2016/32234/201621000467/Description(Complete)

IPO MUMBAI 21-10-2016 12:44

B 101/42069/2016

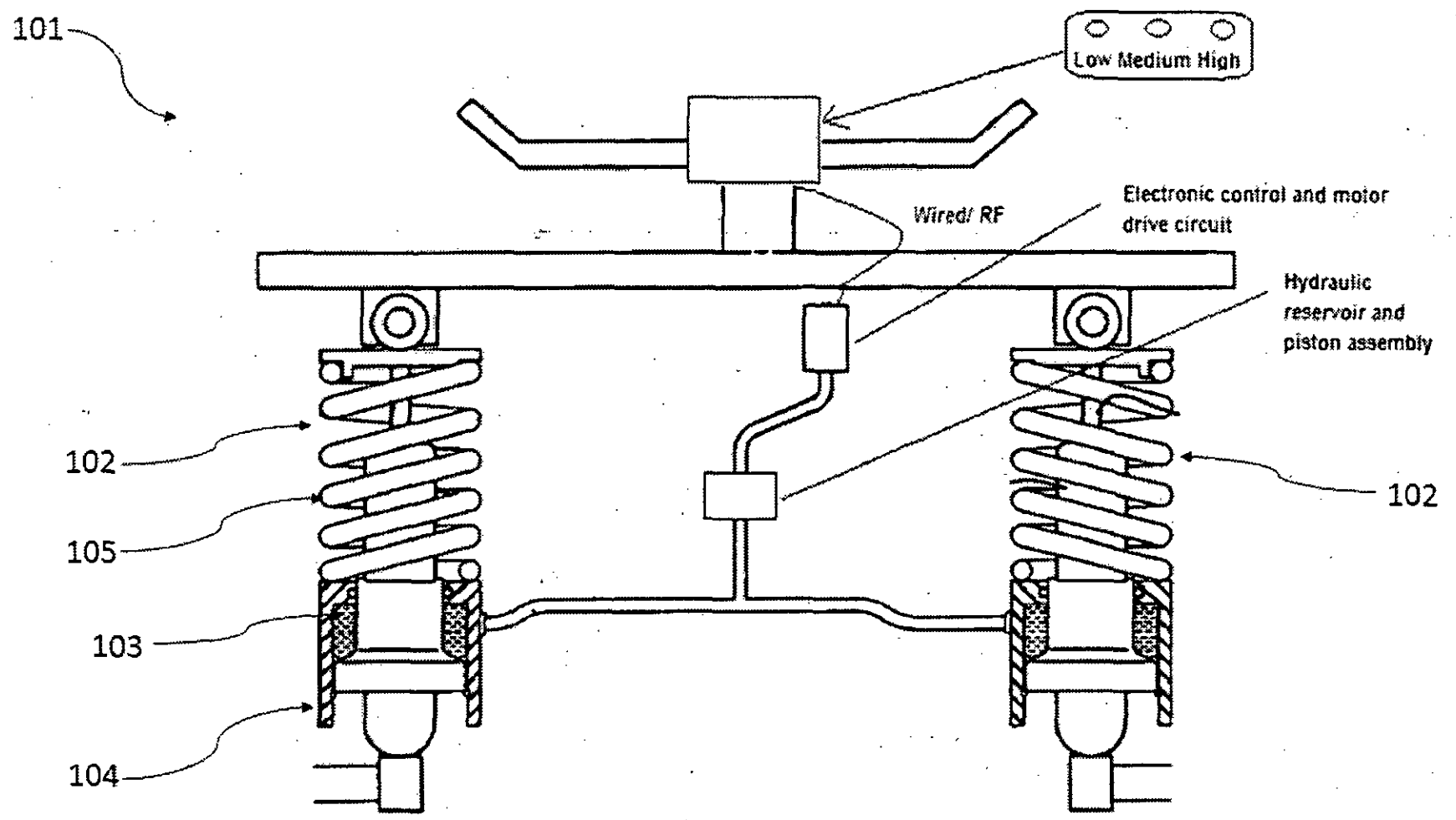

200229234

Figure 1

21-Oct-2016/32234/201621000467/Drawing

IPO MUMBAI 21-10-2016 12:44

Endurance Technologies Limited.

Soumya Prakash Patra
Manager IP Cell

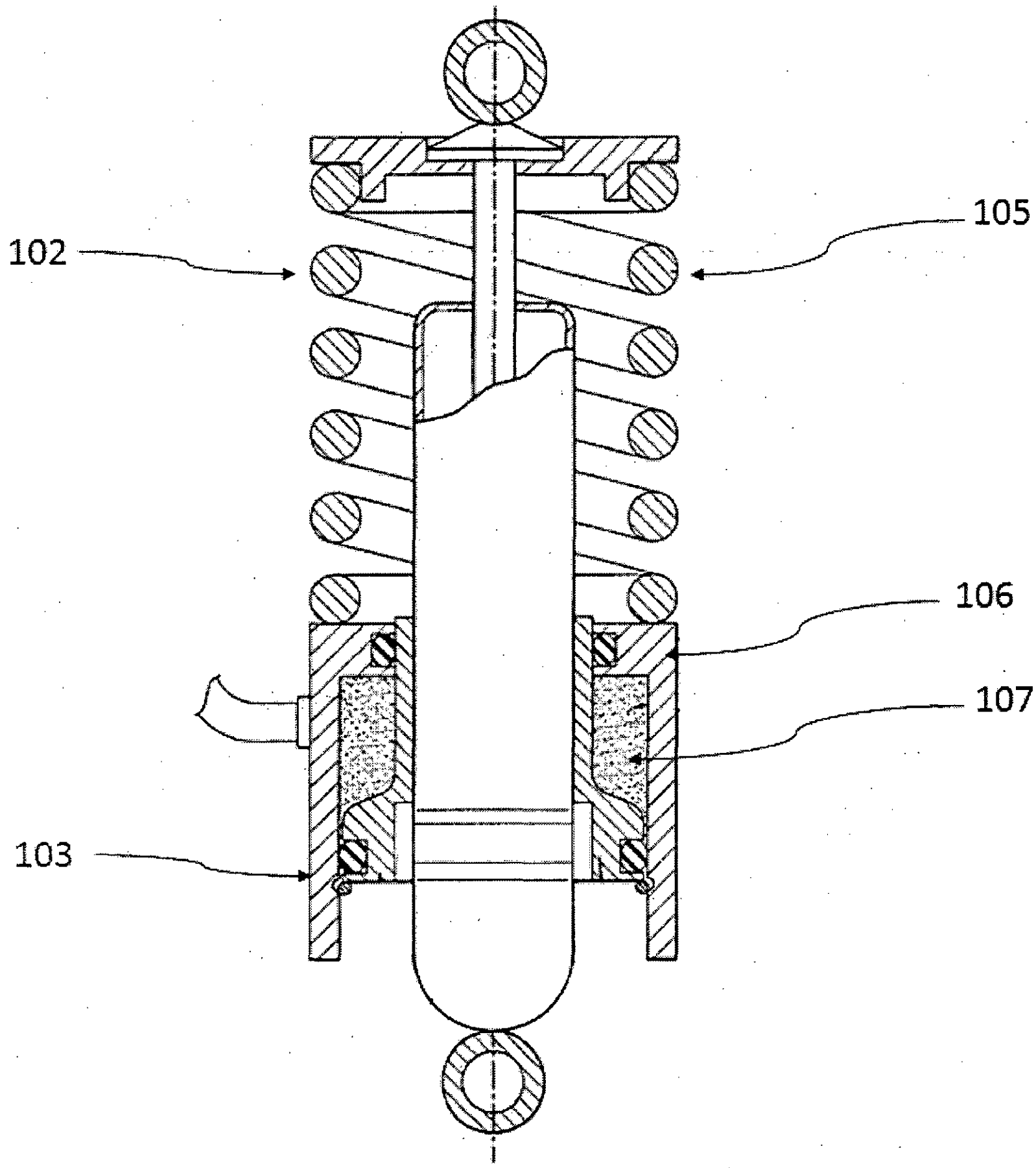

Figure 2

Endurance Technologies Limited.

Soumya Prakash Patra
Manager IP Cell

IPO MUMBAI 21-10-2016 12:44

21-Oct-2016/32234/201621000467/Drawing

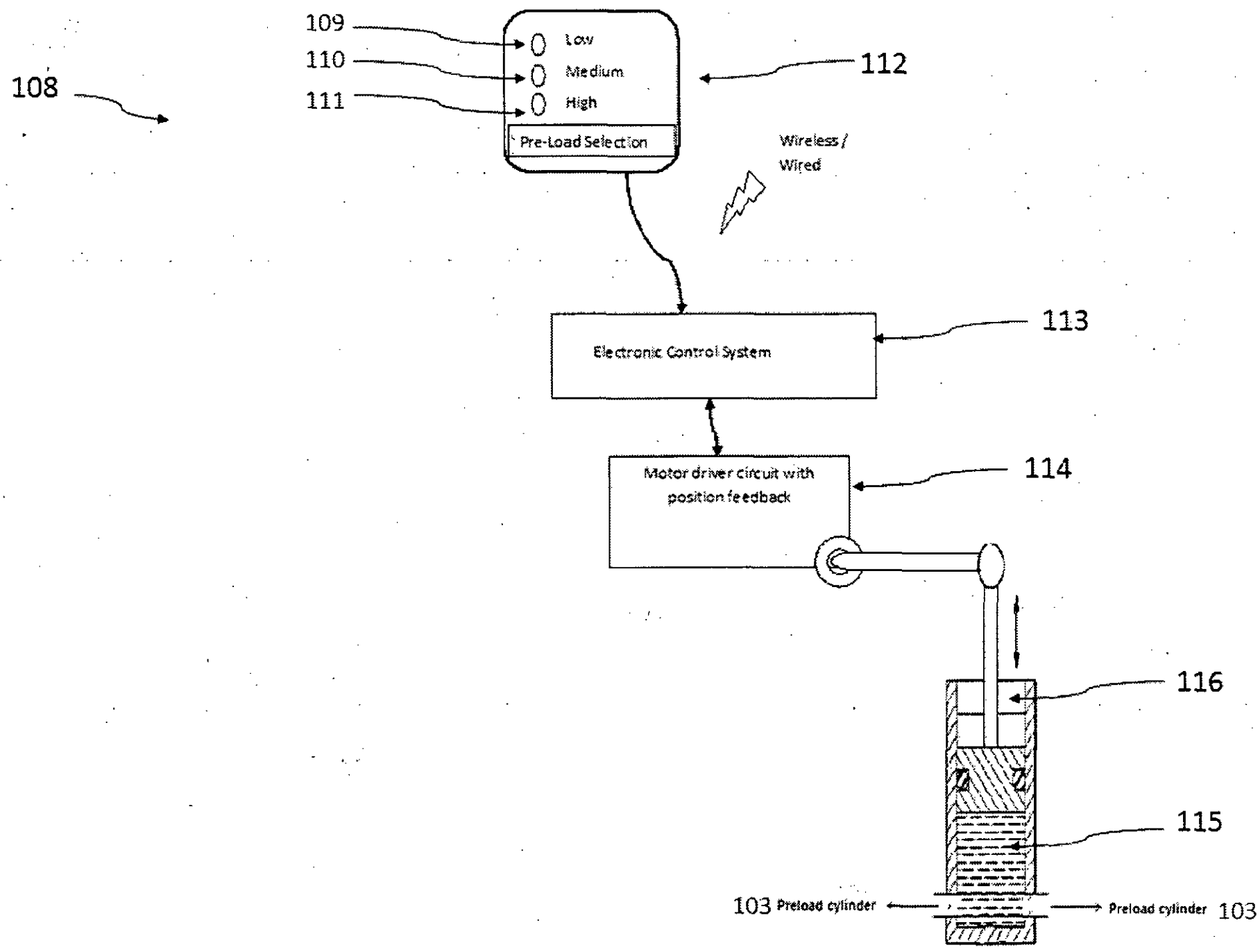

Figure 3

Endurance Technologies Limited.

Soumya Prakash Patra
Manager IP Cell

IPO MUMBAI 21-10-2016 12:44

21-Oct-2016/32234/201621000467/Drawing

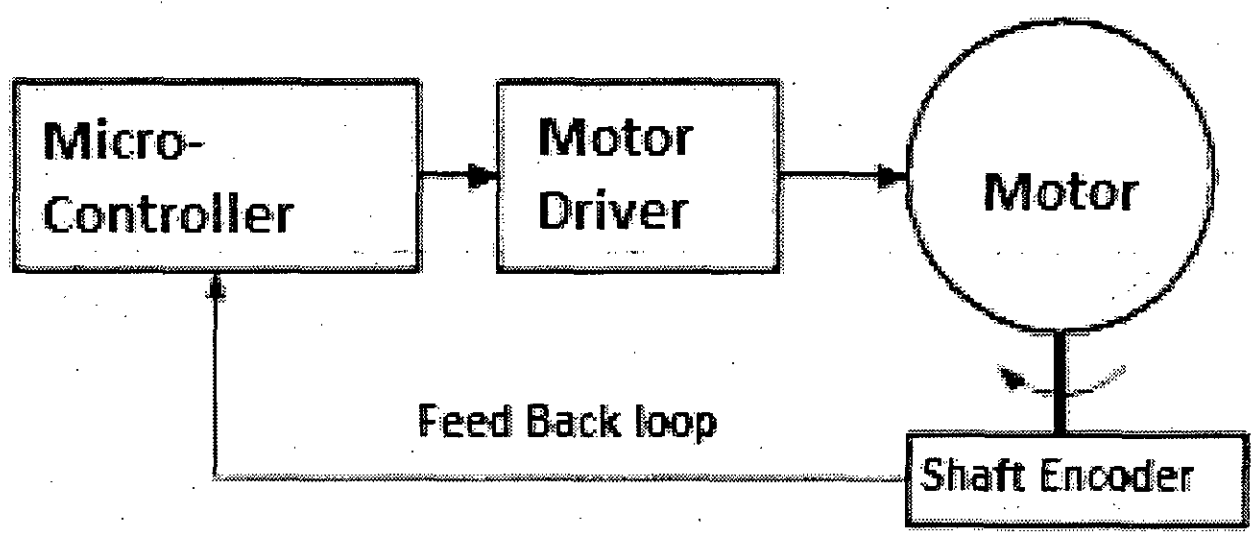

Close Loop System

Figure 4

Endurance Technologies Limited.

Soumya Prakash Patra
Manager IP Cell

IPO MUMBAI 21-10-2016 12:44

21-Oct-2016/32234/201621000467/Drawing

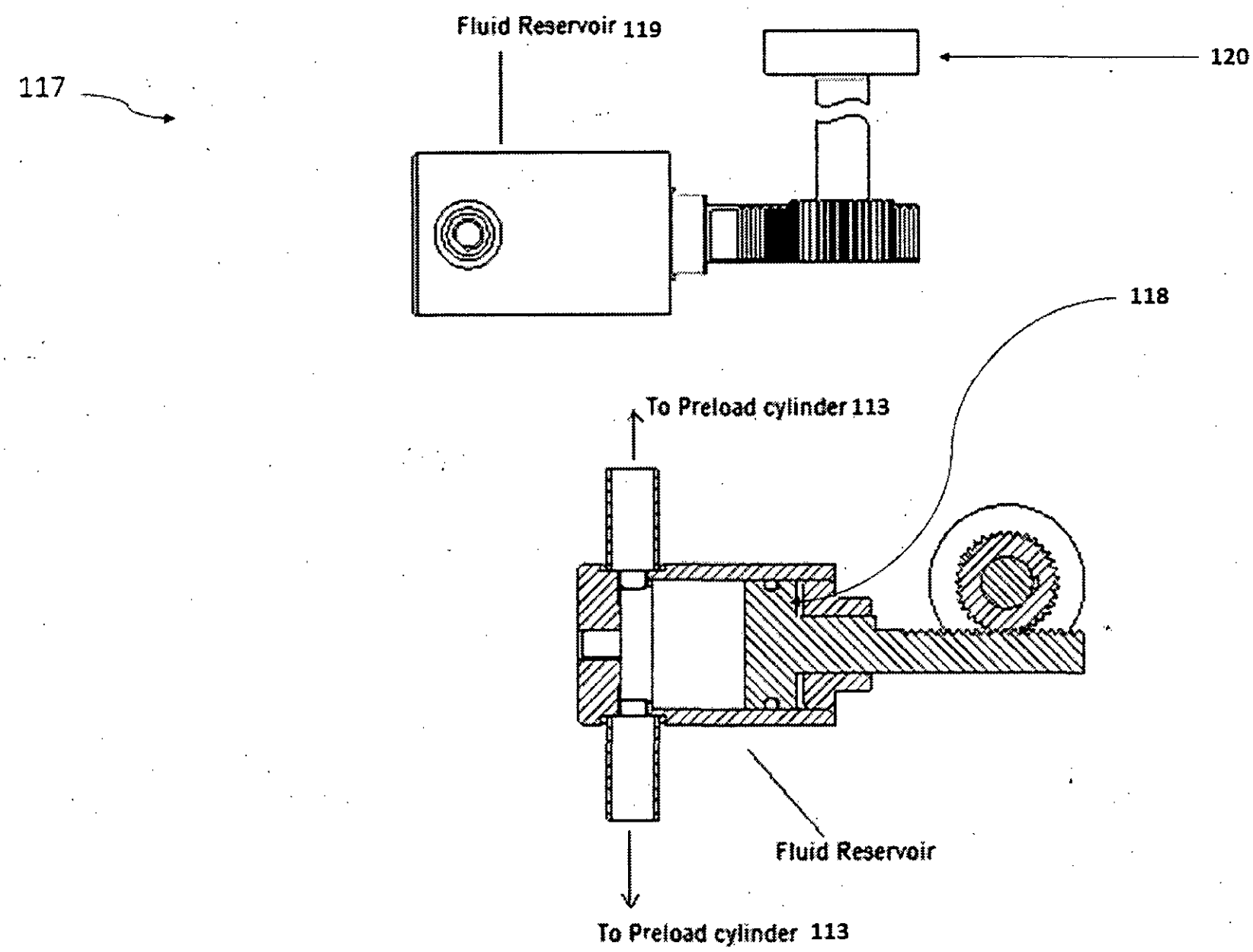

Figure 5

Endurance Technologies Limited.
Soumya Prakash Patra
Manager IP Cell

IPO MUMBAI 21-10-2016 12:44

21-Oct-2016/32234/201621000467/Drawing