(12)Indian Patent Specification

---

(11) Patent Number: 434673 (21) Application Number: 202231057755

(22) Filing Date: 10/10/2022 (43) Publication Date: 21/10/2022 (45) Grant announcement date: 14/06/2023

(71) Applicant(s): INDIAN INSTITUTE OF MANAGEMENT BODH GAYA

(72) Inventor(s): Patra, Soumya Prakash
Jangam, Bhushan Praveen
Agarwal, Rohit

(51) International Classifications: H02J 3/38 B62M 6/90 H02J 3/46 B60W 50/00 B62H 1/02

(54) Title: AUTOMATIC SIDE STAND RETRIEVAL SYSTEM FOR A TWO-WHEELER

(57) Abstract: An automatic side stand retrieval system for a two-wheeler comprising a side stand system, having a spring on a side stand and a solenoid, said solenoid having a push rod to be engaged with a suitable slot on frame of said two-wheeler, a computing unit. Additionally, there exists a means of communication between said computing unit and said solenoid. In this system, when said computing unit actuates said solenoid through said means of communication such as a wire and an electrical signal, push rod of said solenoid engages with said suitable slot on the frame of said two-wheeler, and exerts rotational force on said side stand system.

Abstract

Automatic Side Stand Retrieval System for A Two-Wheeler

An automatic side stand retrieval system for a two-wheeler comprising a side stand system, having a spring on a side stand and a solenoid, said solenoid having a push rod to be engaged with a suitable slot on frame of said two-wheeler, a computing unit. Additionally, there exists a means of communication between said computing unit and said solenoid. In this system, when said computing unit actuates said solenoid through said means of communication such as a wire and an electrical signal, push rod of said solenoid engages with said suitable slot on the frame of said two-wheeler, and exerts rotational force on said side stand system.

Ref fig. 5

Soumya Prakash Patra
Authorized Representative of the Applicant

Claims

We claim:

1. An automatic side stand retrieval system for a two-wheeler (209) comprising:
   a side stand system (213), having a spring (215) on a side stand (219) and a solenoid (216), said solenoid (216) having a push rod (214) to be engaged with a suitable slot (218) on frame of said two-wheeler;
   a computing unit (119); and
   a means of communication between said computing unit (119) and said solenoid (216), characterized by the fact that when said computing unit (119) actuates said solenoid (216) through said means of communication, said push rod (214) of said solenoid (216) engages with said suitable slot (218) on the frame of said two-wheeler, and exerts rotational force on said side stand system,
   and the engine capacity of said two-wheeler is maximum of 50cc and ground clearance less than 120mm.
2. The automatic side stand retrieval system for a two-wheeler (209) as claimed in claim 1, wherein said computing unit (119) comprises a memory device(120) , a processing unit (121), an ignition switch sensing means (126), a brake lever actuation sensor means, a seat load sensor (122), a side stand load sensor (123) and a vehicle bank angle sensor (124).
3. The automatic side stand retrieval system for a two-wheeler (209) as claimed in claim 1, wherein said processing unit (121) gets information from said seat load sensor (122), said side stand load sensor (123), said vehicle bank angle sensor (124), and said brake lever actuation means, compares them to the stored memory data and actuates the said solenoid through a wire.
4. The automatic side stand retrieval system for a two-wheeler (209) as claimed in claim 1, wherein said bank angle sensor range (124) is in between 85 to 95 degrees from horizontal.
5. The automatic side stand retrieval system for a two-wheeler (209) as claimed in claim 1, wherein said seat load sensor (122) get actuated when the load is at least 20 kg.
6. The automatic side stand retrieval system for a two-wheeler (209) as claimed in claim 1, wherein side load sensor (123) gets actuated when the load is more than 3 kg.

Dr Soumya Prakash Patra

Authorised Representative for the Applicants

FORM 2

THE Patent Act, 1970
(39 of 1970)
&
The Patent Rules, 2003

COMPLETE SPECIFICATION
(See Section 10 and Rule 13)

AUTOMATIC SIDE STAND RETRIEVAL SYSTEM FOR A TWO-WHEELER

INDIAN INSTITUTE OF MANAGEMENT BODH GAYA
URUVELA, BODH GAYA, GAYA 824234

.

The following specification describes the invention

Field of the Invention

The present invention relates to two-wheelers such as scooters and motorcycles. More particularly, the present invention relates to parking side stand retrieval of scooters and motorcycles automatically.

Description of the Prior Art

A two-wheeler is provided with a side stand which is convenient for a user to park sideward. When the user does not have enough room to use the center stand (also known as H Stand) and park the two-wheeler, the user can press down the side stand. After pressing down the side stand, the user can slowly push the two-wheeler into a confined parking room. Besides, the side stand is pressed down more easily than the H-shaped stand. For weak users, the side stand has more convenience during the two-wheeler body inclines until they are supported by the ground. The utilization rate of the side stand is often higher than that of the H-shaped stand when the two-wheeler is temporarily parked. As a result, the side stand is very important for the two-wheeler design.

However, the relationship of the side stand supporting the two-wheeler body should be more valued to avoid hurting the user and damaging the two-wheeler body when the user uses the side stand. In the conventional technology, the side stand, which has a shape of a rod with a fixed length, is arranged below the left side of the two-wheeler. Generally speaking, the side stand suits the horizontal ground. The two-wheeler is obliquely supported by the side stand. The side stand can support the center of gravity of the two-wheeler on the ground. The user kicks and lifts off the side stand to help the two-wheeler move on before riding the two-wheeler. The side stand is pressed down when parking the two-wheeler. Nevertheless, the user easily forgets to retract the side stand due to his oversight. Thus, if the two-wheeler moves on too fast, the side stand will touch the ground to easily cause overturn of the two-wheeler, whereby traffic accidents occur. The results of the traffic accidents range from bruises to the affection of life and damage to the two-wheeler.

Accordingly, there was the introduction of side stands with alarms, auto turn-off ignition switches, etc., that would alert the user of the actuation of the stand. However, these are negative actions that could be detrimental to the user experience and serenity of the environment of the actual parking space of such two-wheelers. Additionally, this is true for smaller powered two-wheelers, where the engine, such as those having a capacity of 50cc or less, makes very less noise and any untoward noise emitting from the vehicle is unwelcomed.

Hence the first objective of the present invention is to provide an automatic, positive action, side-stand retrieval system.

The second objective of the present invention is to provide a cost-effective, easily implementable solution that could also be used as a retrofittable device on the existing two-wheelers.

The third objective of the present invention is to provide an automatic side stand retrieval system that also acts as a safety system for avoiding accidents due to non-retrieval of the side stands while riding the two-wheelers.

Summary of the Invention

According to one embodiment of the present invention of a two-wheeler such as a scooter, a side stand actuation system comprises a seat load sensor, a side stand load sensor, a vehicle bank sensor or a vehicle bank angle sensor, and a brake actuation lever. When a user of the said scooter would like to set up his vehicle, said user would put the key in the key slot and activate it through its ignition switch. Normally, activating it would make the circuit of ignition ready for starting said scooter. Once the circuit is activated, the seat load sensor would sense if the user were actually sitting on the said scooter as a second step. The next step initiates when another load sensor is activated on the side stand. It means if the user has not disengaged the contact of the side stand from the ground, and if it is still loaded, the said system would not work, and there would be no disengagement of the side stand. As a fail-safe mechanism on step, a vehicle bank angle sensor is used to determine if the said scooter is really ready to be moved or used to ride as a next step. In case of positive assertion of the last step, once the brake lever is actuated and the ignition switch is switched ON, a solenoid device pushes a push rod on the abutment of a suitable place of the frame of the said scooter, and as a result, the stand gets retraced because of the spring action attached to the stand. This processing from various sensors happens in a processing unit of the computing device. The output from the computing device is fed to solenoid actuator by suitable means such as a wire. The solenoid exerts a rotational force on the stand.

Brief Description of The Drawings

Other aspects of the invention will become apparent by consideration of the accompanying drawings and their description stated below, which are merely illustrative of a preferred embodiment of the invention and do not limit in any way the nature and scope of the invention. Figure 1 illustrates the side stand of a two-wheeler according to the prior art.

Figure 2 illustrates the side of a two-wheeler according to one embodiment of the present invention.

Figure 3 illustrates the working of one of the embodiments of the present invention.

Figure 4 illustrates the system level drawing of one of the embodiments of the present invention.

Figure 5 illustrates the side stand according to one of the embodiments of the present invention under inactive state.

Figure 6 illustrates the side stand according to one of the embodiments of the present invention under active state.

Figure 7 illustrates the actuation mechanism of the side stand according to one embodiment of the present invention.

Detailed Description of the Invention

The invention will now be described with reference to the accompanying drawings, which do not limit the scope and ambit of the invention. The description provided is purely by way of example and illustration.

Nowadays, a side foot stand, an oblique foot stand, or a side of a two-wheeler body is usually used for parking it over various places as a choice. The present invention discloses an improved side stand for a motorcycle arranged on the side of a two-wheeler body to reduce danger due to the fact that a user forgets to retract the side stand while riding the motorcycle and to improve skid-proof properties when parking said two-wheeler.

Figure 1 illustrates a two-wheeler (101) according to the prior art. Here, the side stand (102), which is used, is quite contemporary in construction. The side stand (102) is a metal piece connected to the frame of the two-wheeler and is affixed with a spring. The said side stand (102) is actuated by the push of the leg, which along with the spring action, retraces the stand and abuts it, and it (102) becomes parallel to the ground.

Figure 2 illustrates one of the embodiments of the present invention. A two-wheeler such as a scooter (209) normally comprises a handlebar (211) and a brake lever (210) on its left side. Normally, while starting the scooter, the brake lever (210) is actuated, and thereafter, the ignition is initiated for the said scooter (209). In the present invention, a side stand system (213) is present, which is accompanied by a solenoid actuator (216). There is an abutment over the side of the scooter at a suitable place (218) which helps the solenoid to push its actuation rod and move the side stand along the axial direction of the said scooter (209).

Figure 3 and figure 4 illustrates the working of the present invention. The said actuation system (300) comprises a seat load sensor (122), a side stand load sensor (123), a vehicle bank sensor (124) or a vehicle bank angle sensor, and a brake actuation lever (210). When a user of the said scooter (209) would like to set up his vehicle, said user would put the key in the key slot and activate it (201) through its ignition switch (126). Normally, activating it would make the circuit of ignition ready for starting said scooter. Once the circuit is activated, the seat load sensor (122) would sense if the user were actually sitting on the said scooter (209) as a second step (202). The next step (203) initiates when another load sensor (123) is activated on the side stand (219). It means if the user has not disengaged the contact of the side stand (219) from the ground, and if it is still loaded, the said system (300) would not work, and there would be no disengagement of the side stand (219). As a fail-safe mechanism on step (203), a vehicle bank angle sensor (124) is used to determine if the said scooter is really ready to be moved or used to ride as a next step (204). In case of positive assertion of the last step, once the brake lever (210) (figure 2) is actuated (205) and the ignition switch (126) is switched ON (206), a solenoid device (216) pushes a push rod (214) (Figure 5,6) on the abutment of a suitable place (218) of the frame of the said scooter (209), and as a result, the stand gets retraced because of the spring (215) action attached to the stand (219). This processing from various sensors happens in a processing unit 121 of the computing device (119) (figure 4). The output from the computing device (119) is fed to solenoid actuator by suitable means such as a wire (217) (Figure 7). Normally, such systems would work in any type of two-wheelers, but where noise is a concern, smaller sized two-wheelers having engine capacity of 50cc and less are its main areas of thrust. Additionally, vehicles having less ground clearance, such as those having in the range of 80-120 mm can easily take the advantage of the present invention.

Figure 4 shows a block diagram of an example computing environment in which example embodiments and aspects may be implemented. The system environment is only one example of a suitable computing environment and is not intended to suggest any limitation regarding the scope of use or functionality.

With reference to figure 4, an exemplary system for implementing aspects described herein includes a system. Such as, the actuation system (300), in its most basic configuration, has a computing system (119) and typically includes at least one processing unit or control (121) and system memory (120). Depending on the exact configuration and type of device, system memory (120) may be volatile (Such as random-access memory (RAM)), non-volatile (Such as read-only memory (ROM), flash memory, etc.), or some combination of the two. This most basic configuration is illustrated in Figure 4.

The side stand actuation system (300) typically includes a variety of computer-readable media. Computer-readable media can be any available media that can be accessed by the said system (300) and includes both volatile and non-volatile media and removable and non-removable media. By way of example, and not limitation, computer-readable media may comprise computer storage media and communication media.

The processing unit (121) gets information from a seat load sensor (122), a side stands load sensor (123), a vehicle bank angle sensor (124), and a brake/clutch actuation (125) from such a lever and ignition switch (126). Based on the system memory installed and its comparison thereof, the solenoid is actuated via a medium (217). The typical range for banking in the said bank angle sensor is from 85 to 95 degrees from horizontal (ground), the load range in the said seat load sensor (122) is more than 20 kgs, and the load range for the said side stand sensor (123) is more than 3 kgs. This is a typical example of the said preferred embodiment. Other ranges could be configured and stored in said system memory (120). The workflow has been explained in the previous figure (figure 3).

Figure 5 and figure 6 illustrates the actuation mechanism installed on the said scooter (209) in inactive and active state respectively. A solenoid device (216) is attached with the side stand (219). The said solenoid device (216) has an abutment (214) at its end, that get extended when said device (216) is actuated with pressing of brake lever as explained in figure 3. Once said push rod/abutment (214) pushes the designated place on the frame (218), it exerts rotational force on said stand (219), which due to the spring (215) attached to it gets activated and the said stand (219) gets retraced. The conversion of the said side stand (219) from inactive to active state is done manually.

Figure 7 illustrates the said solenoid actuator (216). It comprises a push rod (214), a mounting mechanism (not shown) and means of actuation (217) such as a wire from a control system. The mounting mechanism can be rivet, welding or any other suitable means of joining.

It will be understood by those skilled in the art that the foregoing general description and the following detailed description are exemplary and explanatory of the disclosure and are not intended to be restrictive thereof.

While specific language has been used to describe the disclosure, any limitations arising on account of the same are not intended. As would be apparent to a person skilled in the art, various working modifications may be made to the method in order to implement the inventive concept as taught herein.

The figures and the forgoing description give examples of embodiments. Those skilled in the art will appreciate that one or more of the described elements may well be combined into a

single functional element. Alternatively, certain elements may be split into multiple functional elements. Elements from one embodiment may be added to another embodiment. For example, the order of processes described herein may be changed and are not limited to the manner described herein. Moreover, the actions of any flow diagram need not be implemented in the order shown; nor do all of the acts need to be necessarily performed. Also, those acts that are not dependent on other acts may be performed in parallel with the other acts. The scope of embodiments is by no means limited by these specific examples.

List Of References

101- Two-wheeler according to prior art

102- Side Stand according to the prior art

119- Computing System

120- System memory

121- Processing unit

122- Seat load sensor

123-Side stand load sensor

124-Vehicle bank angle sensor

125-Brake/clutch actuation

126-Ignition switch

201- Step 1

202- Step 2

203- Step 3

204- Step 4

205- Step 5

206- Step 6

207- Step 8

209- Two-wheeler according to the present invention

210- Brake lever

211- Handle bar

213- Side stand system

214- Push rod of solenoid

215- Spring

216- Solenoid actuator

217- Actuation means from a control system

218- Place on the frame for the push rod

219- Side stand

300- Side stand actuation system

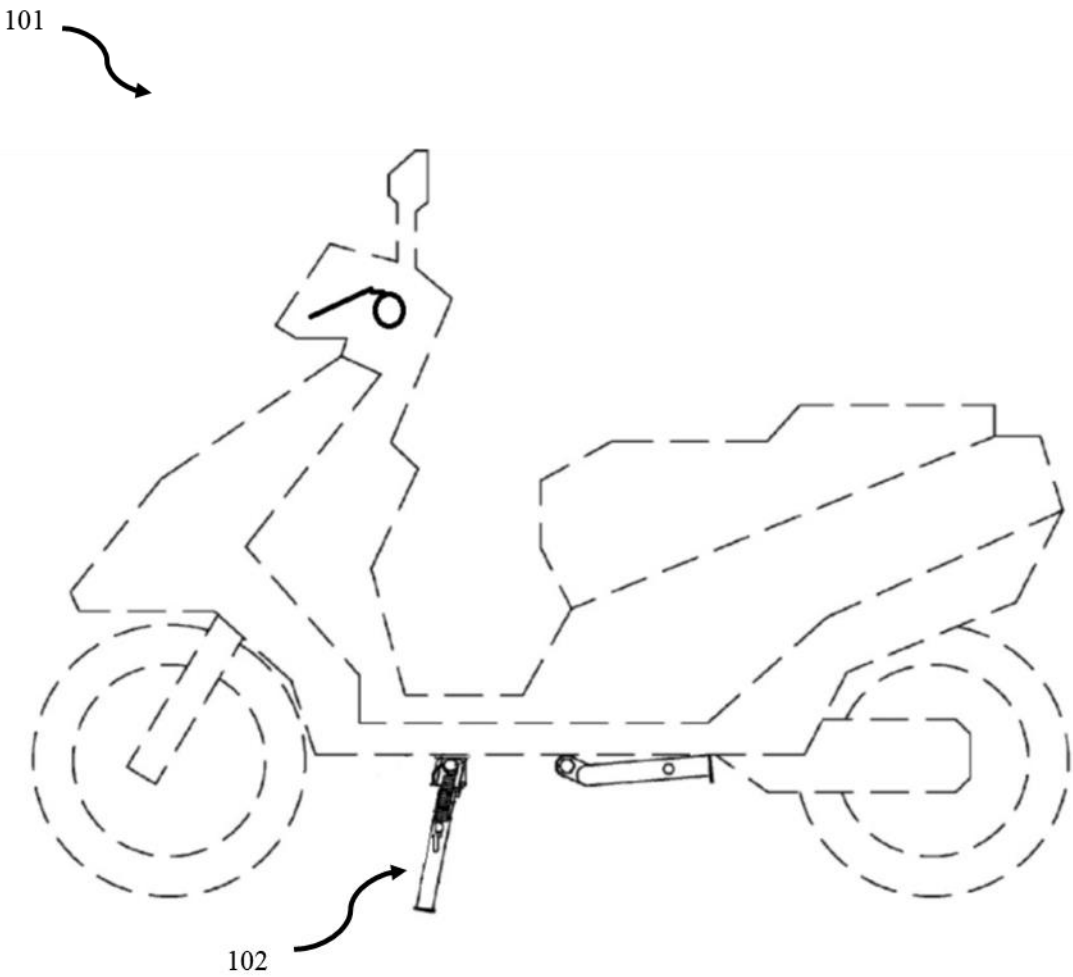

Figure 1

Rohit Agarwal
Authorized Signatory of the Applicant

Signature Not Verified
Digitally Signed.
Name: Rohit Agrawal
Date: 10-Oct-2022 14:15:37
Reason: Patent Efiling
Location: DELHI

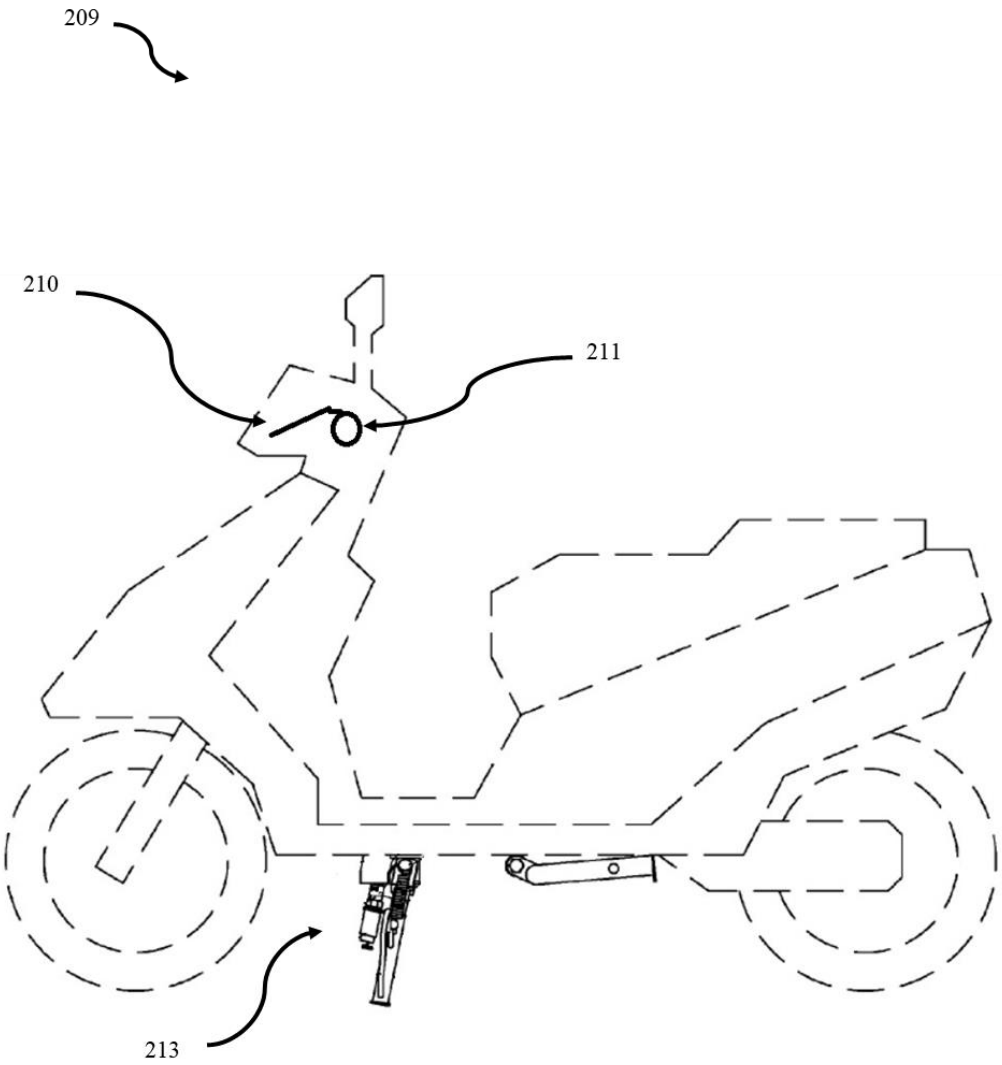

Figure 2

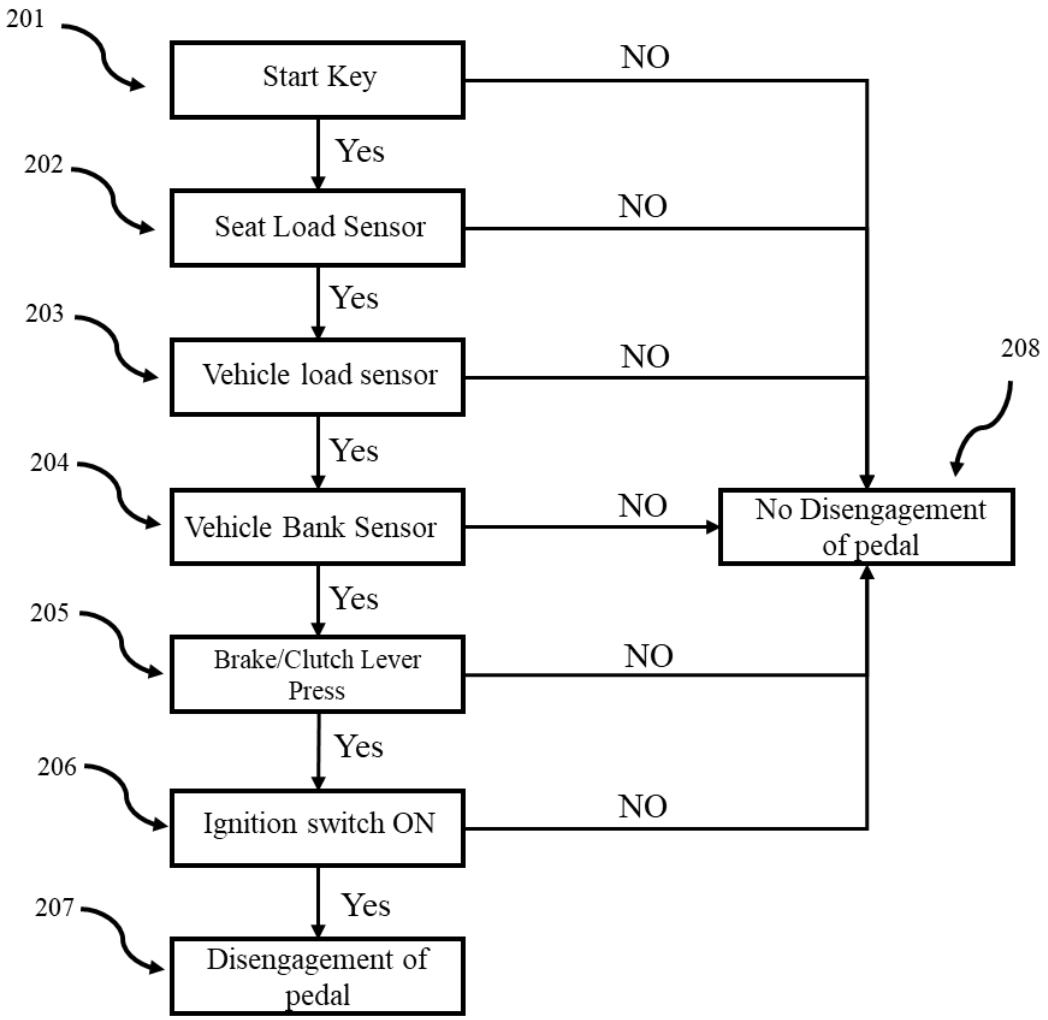
201
Start Key
NO
Yes
202
Seat Load Sensor
NO
Yes
203
Vehicle load sensor
NO
208
Yes
204
Vehicle Bank Sensor
NO
No Disengagement of pedal
Yes
205
Brake/Clutch Lever Press
NO
Yes
206
Ignition switch ON
NO
Yes
207
Disengagement of pedal

Figure 3

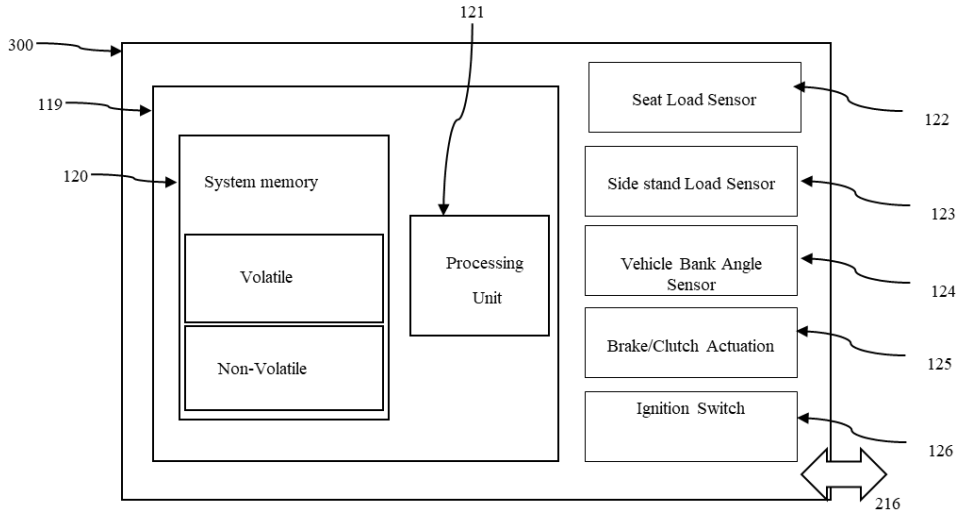
300
119
120
121
System memory
Volatile
Non-Volatile
Processing
Unit
Seat Load Sensor
Side stand Load Sensor
Vehicle Bank Angle
Sensor
Brake/Clutch Actuation
Ignition Switch
122
123
124
125
126
216

Figure 4

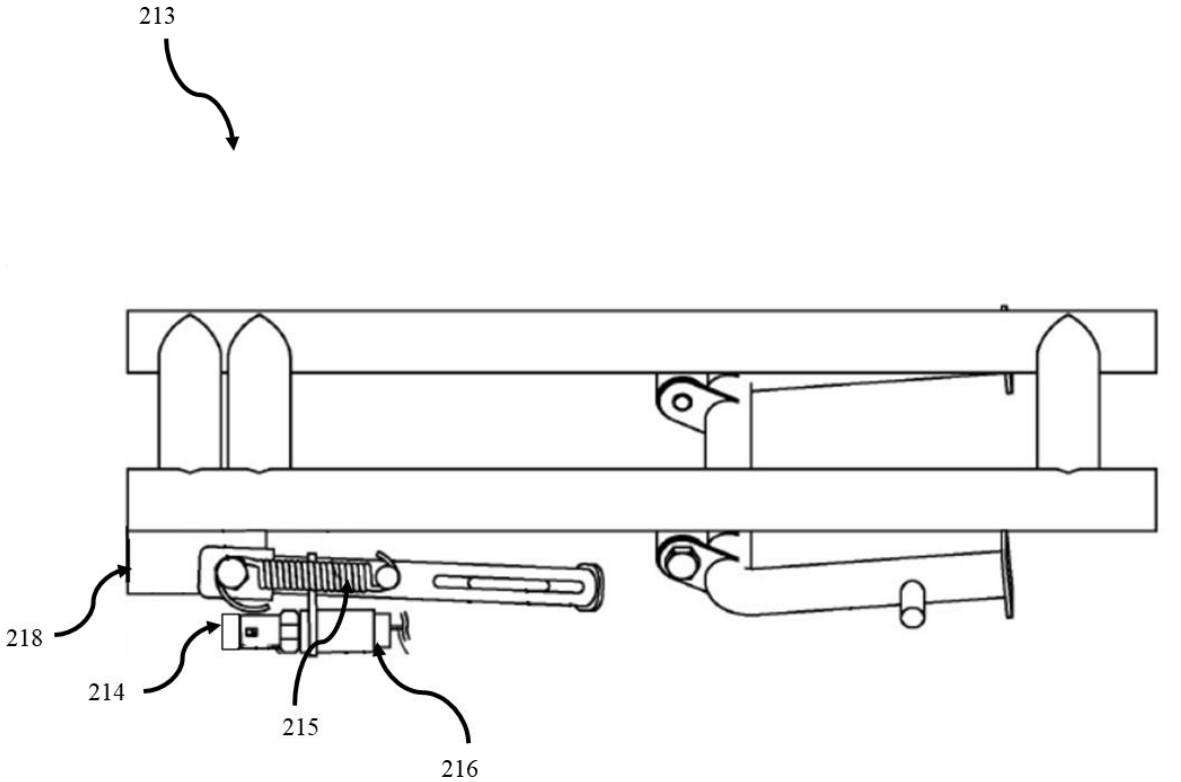

Figure 5

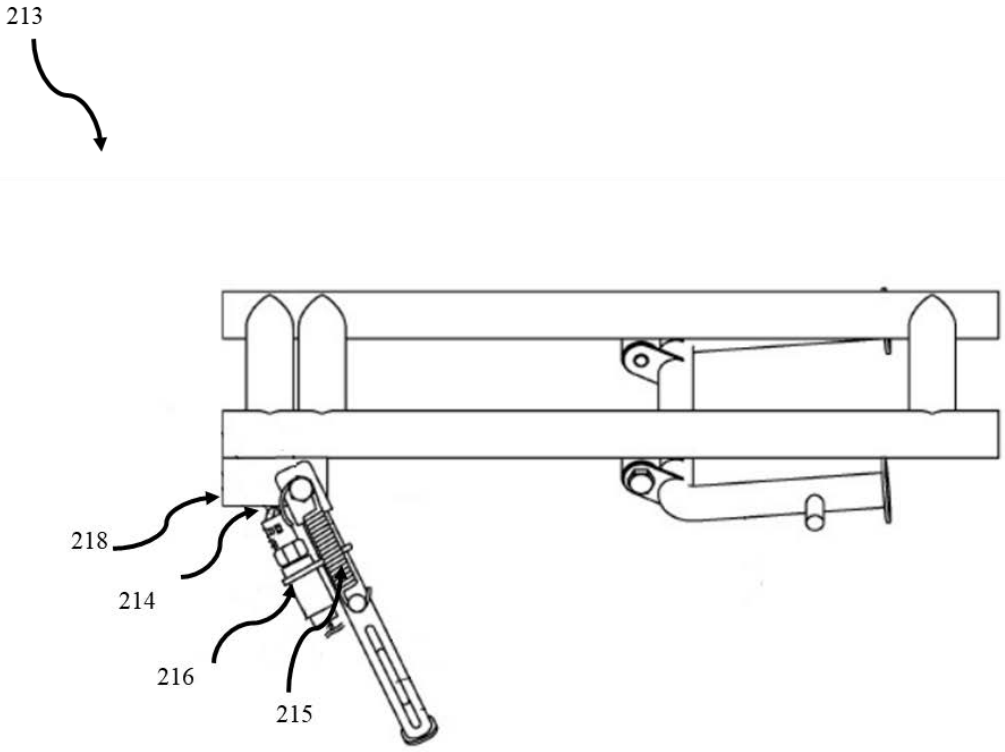

Figure 6

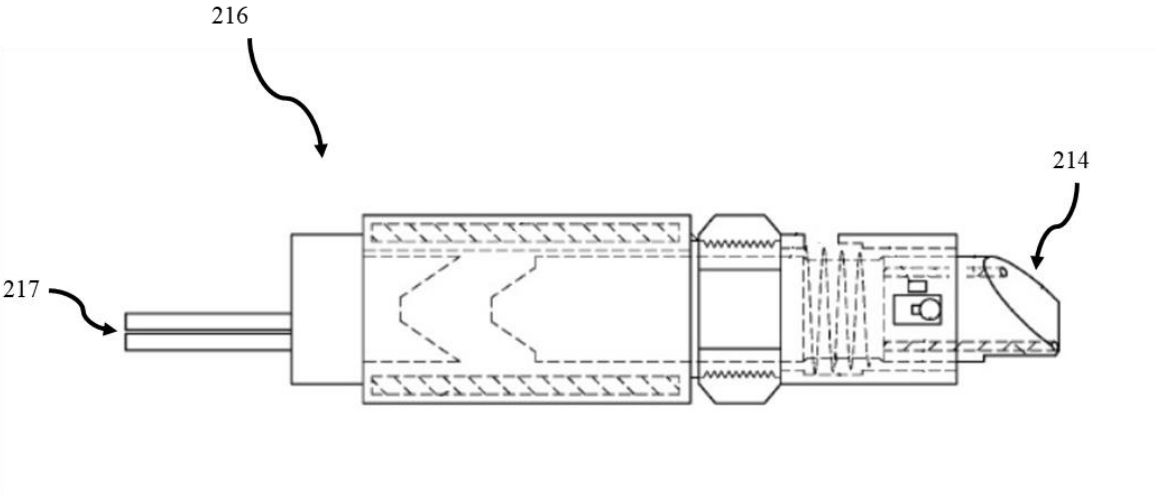

Figure 7