(12)Indian Patent Specification

(11) Patent Number: 560757 (21) Application Number: 202331070663

(22) Filing Date: 17/10/2023 (43) Publication Date: 27/10/2023 (45) Grant announcement date: 20/02/2025

(71) Applicant(s): INDIAN INSTITUTE OF MANAGEMENT BODH GAYA
BIRLA INSTITUTE OF TECHNOLOGY MESRA

(72) Inventor(s): Ghosh, Anupam
Patra, Soumya Prakash
Agrawal, Rohit

(51) International Classifications: B60K 15/07 F02M 1/08 F02M 63/00

(54) Title: A SYSTEM AND A PROCESS FOR PREVENTING ELECTRONIC FUEL INJECTION (EFI) DRY RUNNING IN A TWO-WHEELER

(57) Abstract: The present patent application unveils an inventive solution to mitigate Electronic Fuel Injection (EFI) dry running in two-wheeler engines. This innovation revolves around the integration of an Integrated Starter Generator (ISG) with a microprocessor-controlled system, harmonizing sensor insights and algorithmic precision. The ISG's multifaceted role in generating momentary movement counteracts potential fuel splashing, while the microprocessor orchestrates predictive analysis to prevent EFI dry running. The ensemble of sensors, ISG, and microprocessor synergizes to proactively safeguard engine components, ensuring optimal performance. This solution reshapes motorcycle engineering by enhancing engine reliability, longevity, and overall efficiency, encapsulating the embodiment of modern technology and practical application.

FORM 2

THE Patent Act, 1970
(39 of 1970)
&
The Patent Rules, 2003

COMPLETE SPECIFICATION
(See Section 10 and Rule 13)

A system and a process for preventing Electronic Fuel Injection (EFI) dry running in a two-wheeler

INDIAN INSTITUTE OF MANAGEMENT BODH GAYA
URUVELA, BODH GAYA, GAYA 824234

&

BIRLA INSTITUTE OF TECHNOLOGY MESRA
RANCHI 835215

.

The following specification describes the invention

Field of the Invention

The present invention relates to a system and a process for preventing dry running of electronic fuel injection (EFI) in a two-wheeler. The invention employs an Integrated Starter Generator (ISG) in conjunction with a microprocessor-controlled system to prevent the occurrence of EFI dry running caused by fuel splashing during road irregularities.

Description of the Prior Art

In the field of motorcycle engine technology, advancements have been made in integrating multiple functions within a single component, leading to increased efficiency and improved overall performance. One such development is the concept of the Integrated Starter Generator (ISG). The ISG combines the roles of a traditional starter motor and a generator into a unified unit, offering a range of benefits that enhance the functionality and efficiency of motorcycle engines.

Traditionally, motorcycle engines have relied on separate components for starting and generating electrical power. The starter motor, a dedicated unit responsible for initiating engine rotation during start-up, and the generator, responsible for producing electrical power to charge the battery and operate various electrical systems, were discrete components within the engine system. The ISG redefines this conventional approach by integrating the starter motor and generator functions into a single, compact unit. When starting the engine, the ISG utilizes its starter motor capability to deliver the necessary initial rotational force to crank the engine. This enables a smooth and efficient engine start-up process. Furthermore, during the engine's operation, the ISG seamlessly transitions to its generator function. It converts the mechanical energy produced by the running engine into electrical energy. This electrical energy can be used to charge the motorcycle's battery, power onboard electrical systems, and contribute to the overall power output of the motorcycle. This integration of functions results in a reduction in weight, space requirements, and mechanical complexity within the motorcycle's engine compartment. In certain implementations, the ISG may also incorporate regenerative braking capabilities. During braking, the ISG can act as a generator, capturing kinetic energy and converting it into electrical energy. This energy can then be stored in the motorcycle's battery for later use, potentially enhancing overall energy efficiency and extending battery life.

The concept of integrating starter and generator functions into a single unit has gained attention in the context of hybrid and electric vehicles. This integration offers the potential for enhanced efficiency, improved engine start-up performance, and increased sustainability by harnessing

energy that would otherwise be dissipated as heat during braking. While the concept of integrating an Integrated Starter Generator (ISG) into motorcycle engines brings forth notable advantages, there are challenges associated with maintaining optimal engine operation under various road conditions. Particularly, during the course of motorcycle travel, uneven surfaces, bumps, and dips on roadways can lead to disturbances within the fuel tank. These disturbances can result in fuel splashing, causing potential issues for the engine's Electronic Fuel Injection (EFI) system. The EFI system plays a pivotal role in modern motorcycle engines, ensuring precise fuel delivery for optimal combustion efficiency. However, instances of fuel splashing during road irregularities can lead to the temporary exposure of EFI components to air, causing the EFI system to experience dry running. This phenomenon entails the EFI components operating without the necessary fuel supply, potentially leading to increased wear and tear on these components, reduced engine performance, and potentially adverse impacts on overall engine life. Current design solutions have aimed at minimizing the effects of fuel splashing through the implementation of baffles and foam inserts within the fuel tank. While these approaches can offer some level of improvement, they often fall short of completely eliminating the occurrence of fuel splashing and the subsequent dry running of the EFI system. Furthermore, these solutions may introduce increased complexity to the motorcycle's design, potentially impacting weight, cost, and maintenance considerations. Addressing these challenges requires a comprehensive approach that not only mitigates the risk of dry running in the EFI system but also accounts for cost-effectiveness and practical implementation. Balancing the need for a robust and reliable solution with considerations such as manufacturing feasibility, installation ease, and economic viability is crucial to ensure widespread adoption among motorcycle manufacturers and enthusiasts alike.

In view of the challenges outlined above, the primary objective of the present invention is to provide a reliable and effective solution for preventing the dry running of the Electronic Fuel Injection (EFI) system in motorcycle engines, particularly in scenarios involving fuel splashing due to road irregularities. The proposed solution aims to ensure consistent fuel delivery to the EFI components, thereby safeguarding engine performance and longevity even during bumpy rides.

The invention recognizes the need for a comprehensive approach that not only mitigates the impact of fuel splashing but also takes into account several critical factors, including:

1. Performance Enhancement: The core objective is to maintain optimal EFI operation to uphold engine efficiency, power output, and overall performance. By preventing dry running

of EFI components, the invention seeks to ensure reliable combustion under various road conditions, thereby contributing to a smoother and more consistent ride experience.

2. Reliability: The solution aims to enhance the reliability of motorcycle engines by minimizing wear and tear on EFI components. This reduction in component stress could lead to increased service life, reduced maintenance requirements, and improved overall engine durability.

3. Cost-Effectiveness: An essential aspect of the invention is its consideration of cost-effectiveness. To gain traction in the motorcycle industry, the solution must strike a balance between its benefits and the associated costs. Development, manufacturing, and installation costs must align with industry norms and competitive standards.

4. Compatibility: Recognizing the diversity of motorcycle designs and manufacturers, the proposed solution seeks compatibility with various engine configurations and fuel tank designs. It aims to be adaptable to different motorcycle models without requiring extensive modifications or reengineering of existing systems.

5. Ease of Implementation: The invention aims to provide a solution that can be seamlessly integrated into the existing motorcycle design and manufacturing processes. This ease of implementation is crucial for widespread adoption among manufacturers and for minimizing disruption to established production workflows.

6. Minimal Additional Weight: While addressing the EFI dry running issue, the invention strives to keep any additional weight introduced by the solution within acceptable limits. This consideration is vital to maintain motorcycle handling characteristics and overall performance.

7. Environmental Impact: The invention acknowledges the growing emphasis on sustainability and environmental responsibility. It aims to incorporate eco-friendly materials and practices, minimizing the potential ecological footprint of the solution's manufacturing and operational processes.

The invention understands the complexities and challenges associated with achieving these objectives. It acknowledges the potential trade-offs between performance enhancement, cost-effectiveness, and ease of implementation. By seeking an optimal balance among these considerations, the proposed solution aims to overcome the limitations of prior art designs, ultimately contributing to a more reliable and efficient EFI system for motorcycle engines.

Summary of the invention

This patent application addresses a significant challenge in motorcycle engineering – the issue of Electronic Fuel Injection (EFI) dry running. The phenomenon of EFI dry running, caused by fuel splashing within the tank due to road irregularities, poses a risk to engine performance

and longevity. The proposed solution integrates an Integrated Starter Generator (ISG) with a microprocessor-controlled system, utilizing data from tilt angle and fuel level sensors. This integration is designed to prevent EFI dry running, enhancing engine reliability.

The ISG plays a central role in this solution. It serves as both a starter motor and a generator, powered by the motorcycle's battery. This component generates controlled momentary movement, countering fuel splashing and its potential impact on engine functionality. This ISG, along with the microprocessor unit (MPU) and sensors, forms a proactive shield against EFI dry running, optimizing engine operation.

The MPU, integrated into the motorcycle's system, interacts with the tilt angle and fuel level sensors. These sensors provide real-time data – the tilt angle sensor gauges the motorcycle's inclination, while the fuel level indicator sensor monitors fuel levels. This data empowers the MPU to predict potential EFI dry running scenarios. Upon detecting such a scenario, the ISG is activated to generate momentary movement, counteracting fuel splashing. Concurrently, the EFI system is temporarily suspended, preventing engine operation under compromised fuel conditions.

The orchestrated sequence unfolds as follows: The MPU collects data from the sensors, analyzes tilt angle, and fuel level information. Using predictive analysis, it anticipates EFI dry running scenarios. If such a scenario is predicted, the ISG is activated to generate controlled movement that counters fuel splashing. Simultaneously, the EFI system is suspended to ensure engine protection. Once the motorcycle stabilizes, the MPU detects this condition and restores EFI functionality. The ISG transitions back to standby mode.

Incorporating a tangible support framework, Figure 5 illustrates network interfaces, processors, memory units, and user interfaces. These components collectively execute the algorithm's steps. The network interface facilitates communication between the processor, MPU, and sensors, enhancing analytical capabilities.

This patent application introduces a practical solution to address EFI dry running. By integrating the ISG, microprocessor-controlled system, and sensors, the invention proactively prevents engine damage and optimizes performance. The algorithm's orchestration ensures timely interventions, safeguarding the engine against adverse conditions. This innovation demonstrates a thoughtful integration of components to overcome a critical challenge in motorcycle engineering.

Brief Description of the Drawings

Other aspects of the invention will become apparent by consideration of the accompanying drawings and their description stated below, which are merely illustrative of a preferred embodiment of the invention and do not limit in any way the nature and scope of the invention.

Figure 1 illustrates a typical ISG according to one of the embodiments of the present invention

Figure 2 illustrates the arrangement of the ISG, EFI and one of the embodiments of the present invention.

Figure 3 illustrates the enlarged view of the present invention assembled into a two-wheeler according to one of the embodiments of the present invention.

Figure 4 illustrates the working of one of the embodiments of the present invention.

Figure 5 illustrates the system view of one of the embodiments of the present invention.

Detailed Description of the Invention

In the intricate landscape of motorcycle engineering, the specter of Electronic Fuel Injection (EFI) dry running casts a shadow over engine performance and durability. This challenge, born from the capricious movement of fuel within the tank due to road irregularities, threatens to disrupt fuel delivery, potentially leading to engine malfunctions. To counter this daunting adversary, the present invention strides onto the stage with a harmonious ensemble of physical components and algorithmic brilliance. Through the synergy of an Integrated Starter Generator (ISG), a microprocessor-driven system, and insights gleaned from tilt angle and fuel level sensors, the invention unfurls as a magnum opus, rewriting the narrative of engine reliability and performance.

Central to this innovation is the ISG, a dynamic entity introduced vividly in Figure 1. Embodied by the symbolic numeral 101, the ISG seamlessly transitions between two roles—those of a starter motor and a generator. This metamorphosis is a testament to its adaptability and prowess. During engine initiation, it conducts the symphony of cranking, while in the throes of engine operation, it harnesses its potential to generate vital electricity. Fueled by the motorcycle's battery, the ISG adds a new dimension to its role by orchestrating momentary movements that artfully counteract the tumultuous effects of fuel splashing.

Figures 2 and 3 draw the curtain back on the physical manifestation of the invention's strength. At the forefront stands the Tilt Angle Sensor (2), an ever-watchful sentinel that gauges the motorcycle's inclination in relation to the road's contours. Its real-time data flows through the

intricate network of the motorcycle's architecture, converging at the core of the operation—the Microprocessor Unit (MPU). Simultaneously, the Fuel Level Indicator Sensor (3), an indefatigable observer, maintains a vigilant eye on the fuel level within the tank. This steady stream of data transforms into the notes of a symphony, conducted by the MPU to orchestrate an exquisite dance of intelligent actions.

Figure 4 stands as the nucleus of the algorithm, intricately weaving a sequence of sequential actions governed by reference numerals [1] to [12], [4b], and [5b]. The process initiation is marked by the pivotal phase of data collection [1]. Here, the Tilt Angle Sensor (2) and the Fuel Level Indicator Sensor (3), prominently featured in Figures 2 and 3, take the spotlight. These sensors operate cohesively to continuously monitor the motorcycle's orientation and the real-time fuel levels, bestowing upon the algorithm a steady stream of essential insights that lay the foundation for informed decision-making.

The algorithm's essence thrives within the precinct of predictive analysis [2]. This crucial stage harnesses the raw data procured from the sensors to proactively envision potential scenarios of Electronic Fuel Injection (EFI) dry running [4b]. This phenomenon, a consequence of fuel splashing during rides, poses a tangible threat to the engine's optimal performance, mandating a preemptive response.

Upon the detection of impending EFI dry running risks, the algorithm instantaneously triggers the activation of the Integrated Starter Generator (ISG) (101) [6]. Simultaneously, the EFI system experiences a momentary suspension [8], meticulously engineered to shield the engine from functioning under suboptimal fuel conditions, safeguarding its longevity.

The ISG ascends to prominence, delivering its critical role of generating a precisely calibrated burst of momentary movement [7]. This strategic movement serves as an efficient countermeasure against the disruptive potential of fuel splashing [7], thereby ensuring that EFI components remain well-lubricated and protected even in the face of arduous terrain and unexpected road conditions.

With the EFI suspension phase reaching its designated culmination [8], the algorithm orchestrates the return to stability [9], signaling the resumption of the EFI system's normal functioning [10]. Simultaneously, the ISG gracefully shifts back to its standby mode [11a], prepared to stand as a vigilant guardian, ever ready for potential future activations.

Figure 5 steps onto the stage as a vital backdrop fortifying the algorithm's execution. This illustration captures a meticulous assembly of components, including network interfaces, processors, memory units, and user interfaces [501, 502, 503, 504]. The network interface [501]

shoulders the responsibility of facilitating seamless communication and uninterrupted data exchange among diverse components. The processor [502], the algorithm's cerebral center, diligently processes the influx of sensor data, translating them into informed actions. Memory units [503] act as the repository of vital data and instructions, empowering the decision-making process with a robust reservoir of insights. User interfaces [504] offer a portal for user engagement, providing an avenue to access critical insights and effectuate necessary adjustments to optimize the algorithm's efficacy.

In essence, Figure 4 epitomizes the algorithm's conductor, guiding it to circumvent EFI dry running and enhancing the engine's lifespan. Each reference numeral, spanning [1] to [12], in addition to [4b], [5b], and [11a], contributes a distinct facet to this complex safeguarding mechanism, fundamentally altering the reliability and efficiency of motorcycle engines. Concurrently, Figure 5 acts as the structural scaffold underpinning the algorithm's operation, embodying a harmonious amalgamation of components that collectively foster the algorithm's precision and seamless functionality.

Figure 6 illustrates the system architecture diagram. At the heart of this diagram lies a visual representation of the inventive system's architecture, which harmoniously orchestrates the interaction between various essential components. Each component within this architecture serves a pivotal role in not only mitigating Electronic Fuel Injection (EFI) dry running but also elevating the overall performance of the engine. The nomenclature used in this depiction remains consistent and coherent, enhancing the clarity and understanding of the system's intricate dynamics.

(601) - Engine:

Central to this architecture is the engine, acting as the vital powerhouse responsible for the conversion of fuel into mechanical energy. Serving as the foundational element of the entire system, the engine's efficiency and performance significantly influence the system's overall effectiveness.

(602) - Integrated Starter Generator (ISG):

In alignment with the designation (101) seen in Figure 1, the Integrated Starter Generator (ISG) retains its fundamental significance within this architecture. The ISG, a dual-purpose entity functioning both as a starter motor and a generator, serves as a linchpin in this innovative setup. Its capabilities extend beyond conventional engine cranking, encompassing the generation of precisely calculated momentary movements that counteract the adverse effects of fuel splashing.

(603) - Electronic Fuel Injection (EFI) System:

This depiction, reminiscent of the configuration highlighted by (201) in Figure 2, underscores the prominence of the Electronic Fuel Injection (EFI) system. As the primary mechanism responsible for accurate and efficient fuel delivery to the engine, the EFI system plays a crucial role in optimizing engine performance.

(502) - Microprocessor Unit (MPU):

The Microprocessor Unit (MPU), directly corresponding to the designation (502) in Figure 3, forms the intellectual core of this architecture. Armed with the capability to process real-time data emanating from a myriad of sensors, the MPU acts as the proverbial brain of the system. It skillfully anticipates potential Electronic Fuel Injection (EFI) dry running scenarios and triggers appropriate responses in real time.

The predictive algorithm embedded within the microprocessor unit (MPU) (502) stands as the vigilant sentinel against the looming threat of Electronic Fuel Injection (EFI) dry running scenarios. Through a meticulous fusion of data analysis techniques, algorithmic intricacies, and real-time sensor inputs, this algorithm orchestrates a proactive defense mechanism to safeguard engine integrity.

At its core, the predictive algorithm harnesses the wealth of data emanating from the tilt angle sensor (605) and fuel level indicator sensor (606) to discern patterns and trends indicative of potential EFI dry running conditions. Leveraging sophisticated data analysis methodologies, the MPU scrutinizes the motorcycle's orientation and fuel levels with precision, discerning subtle deviations that hint at impending fuel delivery disruptions.

The algorithm's predictive prowess extends beyond mere data interpretation, delving into the realm of probabilistic modeling and scenario forecasting. By extrapolating historical data trends and factoring in dynamic environmental variables, such as road conditions and vehicle speed, the MPU anticipates EFI dry running scenarios with unparalleled accuracy. This predictive foresight empowers the system to preemptively activate the Integrated Starter Generator (ISG) (101) before the onset of compromised fuel conditions, thereby averting potential engine malfunctions.

Central to the algorithm's efficacy is its ability to orchestrate the generation of "momentary movement" by the ISG (101). This term, now explicitly defined within the specification, encapsulates a brief, controlled motion designed to disrupt fuel splashing within the motorcycle's fuel tank. Through precise adjustments in rotational speed and torque, the ISG

executes this strategic maneuver, effectively mitigating the adverse effects of fuel sloshing during dynamic riding conditions.

(605) - Tilt Angle Sensor:

In Figure 4, the Tilt Angle Sensor maintains its pivotal significance within this diagram. The sensor vigilantly monitors the motorcycle's inclination and promptly communicates this information to the MPU. This real-time data enables the system to anticipate potential EFI dry running situations arising from significant tilting.

(606) - Fuel Level Indicator Sensor:

Similarly, (603) from Figure 4 finds its place in this diagram as the Fuel Level Indicator Sensor. Continuously monitoring the fuel levels within the tank, this sensor offers crucial data to the MPU. This data aids in the anticipation of conditions that could lead to fuel splashing, thereby influencing the prevention of EFI dry running.

(607) - Electronic Control Unit (ECU):

While not directly aligned with any prior figures, the Electronic Control Unit (ECU) assumes a pivotal role in this architecture. Serving as the control center of the EFI system, the ECU receives data from various sensors and orchestrates precise fuel injection. Its intelligence ensures that the engine operates optimally, enhancing both performance and efficiency.

(608) - Algorithm Support Framework:

Referencing the framework denoted by (500) in Figure 5, the Algorithm Support Framework emerges as a crucial component facilitating the execution of the predictive algorithm. Comprising (609) Network Interface, (610) Processor, (611) Memory, and (612) User Interface, this framework empowers the algorithm to anticipate potential EFI dry running scenarios and proactively counteract them.

(609) - Network Interface:

At the forefront of this framework is the Network Interface, serving as the conduit for seamless data exchange between components. This interface ensures that the Microprocessor Unit (MPU), sensors, and other critical elements communicate effectively, enabling the integration of real-time data into the algorithm's decision-making process.

(610) - Processor:

The Processor, equivalent to (502) in Figure 5, is the computational powerhouse that executes the algorithmic logic. By interpreting sensor data and processing complex algorithmic sequences, the Processor triggers timely and appropriate responses to prevent EFI dry running.

(611) - Memory:

Mirroring the role ascribed to (503) in Figure 5, Memory emerges as the repository of essential data, historical patterns, and algorithmic sequences. This data storage enhances the algorithm's predictive capabilities, enabling it to anticipate potential EFI dry running scenarios based on historical information.

(612) - User Interface:

Closely resembling (504) in Figure 5, the User Interface offers an interactive platform that enhances user experience. Although not directly linked to EFI dry running prevention, this interface allows users to monitor the system's status, access diagnostics, and potentially influence system behavior.

This comprehensive depiction of the system architecture, complete with coherent nomenclature and a structured arrangement of components, underscores the intricate synergy between each element. The seamless interplay of (601) through (612) ultimately results in the holistic prevention of EFI dry running, while also significantly enhancing engine optimization and overall motorcycle performance.

In closing, the comprehensive description presented herein has meticulously unveiled the innovative integration of an Integrated Starter Generator (ISG), microprocessor-controlled system, and sensor ensemble, revolutionizing the realm of motorcycle engineering. By proactively averting the potential pitfalls of Electronic Fuel Injection (EFI) dry running, this invention underscores the convergence of technological acumen and practical application. The orchestrated symphony of algorithmic precision, sensor insights, and ISG kinetics not only safeguards engine components but also enhances the performance and longevity of motorcycle engines. This endeavour marks a remarkable stride towards optimizing engine reliability, and in doing so, reshaping the landscape of motorcycle engineering. As this detailed description concludes, it lays a robust foundation for the subsequent claims and embodiments that encapsulate the inventive essence of this novel solution.

<u>List of numerals</u>

Figure 1: Integrated Starter Generator (ISG)

(101) - Integrated Starter Generator (ISG)

Figure 2: Two-Wheeler Setup

(200) - Two-Wheeler

(201) - Invention Setup with ISG, EFI, and Processor

Figure 3: Enlarged View of ISG, EFI, and Physical Components

(101) - Integrated Starter Generator (ISG)

(201) - Invention Setup with ISG, EFI, and Processor

Figure 4: Algorithm Flowchart

[1] - Microprocessor Unit (MPU) Collects Sensor Data

[2] - Tilt Angle Sensor Monitors Inclination

[3] - Fuel Level Indicator Sensor Detects Fuel Level

[4] - MPU Predicts EFI Dry Running

[4b] - Potential Scenarios of EFI Dry Running

[5] - ISG Activation and EFI Suspension

[5b] - Temporary Suspension of EFI System

[6] - ISG Draws Power and Generates Momentary Movement

[7] - Momentary Movement Counteracts Fuel Splashing

[8] - EFI System Temporarily Suspended

[9] - Stable Condition Regained

[10] - EFI Restoration and ISG Standby

[11a] - ISG Transitions Back to Standby Mode

[12] - Algorithm Flow Concludes

502- Processor (MPU)

605- Tilt angle sensor

605- Fuel level sensor

Figure 5: Algorithm Support Framework

(500) - Algorithm Support Framework

(501) - Network Interface

(502) – Processor (MPU)

(503) - Memory

(504) - User Interface

Figure 6: Block Diagram of Engine, ISG, and EFI System

- (101) - ISG: Integrated Starter Generator
- (200) - Two-Wheeler
- (201) - Invention Setup with ISG, EFI, and Processor
- (300) - Engine
- (302) - ECU: Electronic Control Unit
- (500) - Algorithm Support Framework
- (501) - Network Interface
- (502) - Processor

- (503) - Memory
- (504) - User Interface

Claims

We claim:

1. A system for preventing Electronic Fuel Injection (EFI) dry running in a two-wheeler, comprising:
   an Integrated Starter Generator (ISG) (101);
   a microprocessor unit (MPU) (502) configured to receive data from a tilt angle sensor (605) and a fuel level indicator sensor (606); characterized by the fact that
   said MPU (502) programmed to predict potential scenarios of EFI dry running (4b) based on the received data;
   said MPU (502) is programmed to activate said ISG (101) to generate momentary movement (6) counteracting fuel splashing when potential EFI dry running is predicted; and
   said MPU (502) programmed to temporarily suspend the EFI system (8) during said momentary movement (6) to prevent engine operation under compromised fuel conditions.
2. The system as claimed in claim 1, wherein said network interface (501) facilitates seamless communication between said processor (502) and said MPU (502), tilt angle sensor (605), and fuel level indicator sensor (606).
3. The system as claimed in claim 1, wherein said ISG (101) is configured to draw power from a battery and utilize vehicle inertia to generate said momentary movement (6).
4. A process for preventing Electronic Fuel Injection (EFI) dry running in a two-wheeler, comprising the steps of:
   collecting real-time data from a tilt angle sensor (605) and a fuel level indicator sensor (606);
   predicting potential scenarios of EFI dry running (4b) based on the collected data;
   activating an Integrated Starter Generator (ISG) (101) to generate momentary movement (6) when potential EFI dry running is predicted; and
   temporarily suspending the EFI system (8) during said momentary movement (6) to prevent engine operation under compromised fuel conditions.
5. The process as claimed in claim 4, comprising the step of:
   facilitating seamless communication between a microprocessor unit (MPU) (604), said processor (502), said tilt angle sensor (605), and said fuel level indicator sensor (606) through a network interface (501).

6. The process as claimed in claim 4, comprising the step of:
drawing power from a battery and utilizing vehicle inertia to generate said momentary movement (6) using said ISG (101).

7. The process as claimed in claim 4, comprising the step of:
generating said momentary movement (6) by said ISG (101) to counteract the effects of road irregularities and prevent fuel splashing during potential EFI dry running scenarios.

Dr Soumya Prakash Patra
Authorized Representative of the Applicant

Abstract

A system and a process for preventing Electronic Fuel Injection (EFI) dry running in a two-wheeler

The present patent application unveils an inventive solution to mitigate Electronic Fuel Injection (EFI) dry running in two-wheeler engines. This innovation revolves around the integration of an Integrated Starter Generator (ISG) with a microprocessor-controlled system, harmonizing sensor insights and algorithmic precision. The ISG's multifaceted role in generating momentary movement counteracts potential fuel splashing, while the microprocessor orchestrates predictive analysis to prevent EFI dry running. The ensemble of sensors, ISG, and microprocessor synergizes to proactively safeguard engine components, ensuring optimal performance. This solution reshapes motorcycle engineering by enhancing engine reliability, longevity, and overall efficiency, encapsulating the embodiment of modern technology and practical application.

Reference figure 3

Dr Soumya Prakash Patra

Authorized Representative of the Applicant

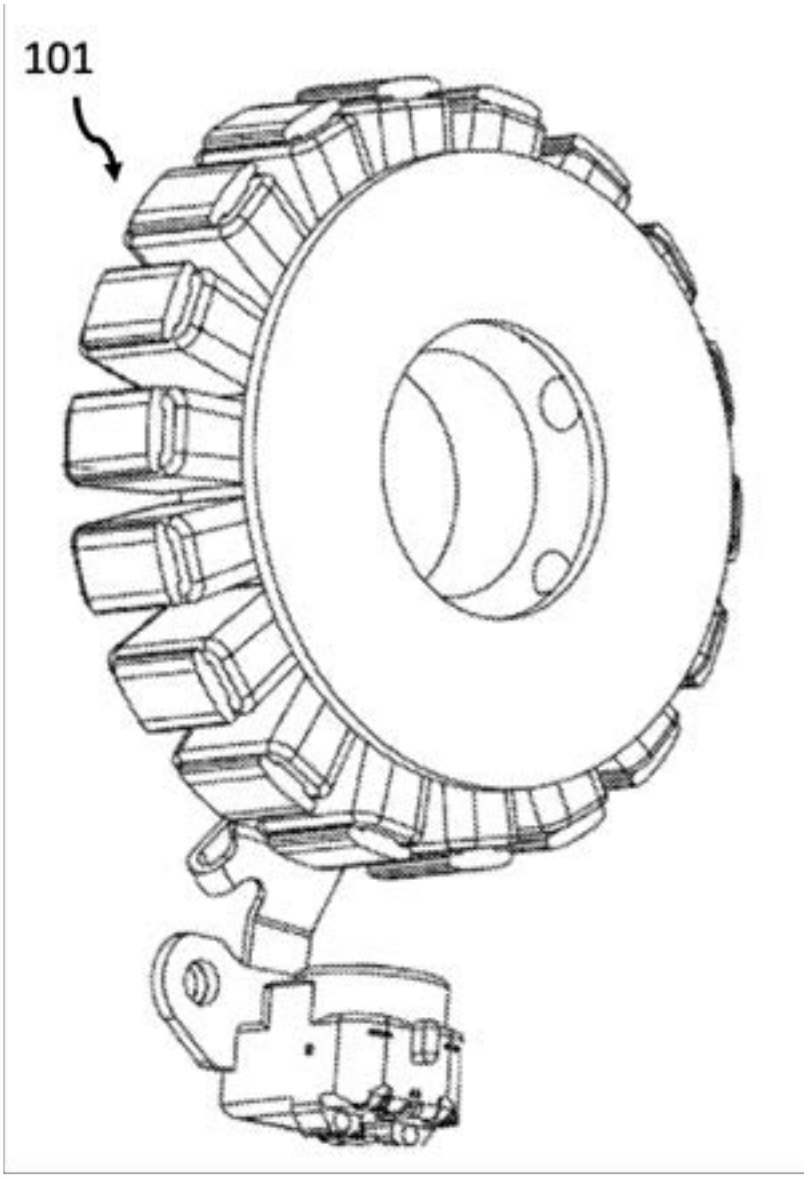

Figure 1

Soumya Prakash Patra
Authorized Signatory of the Applicant

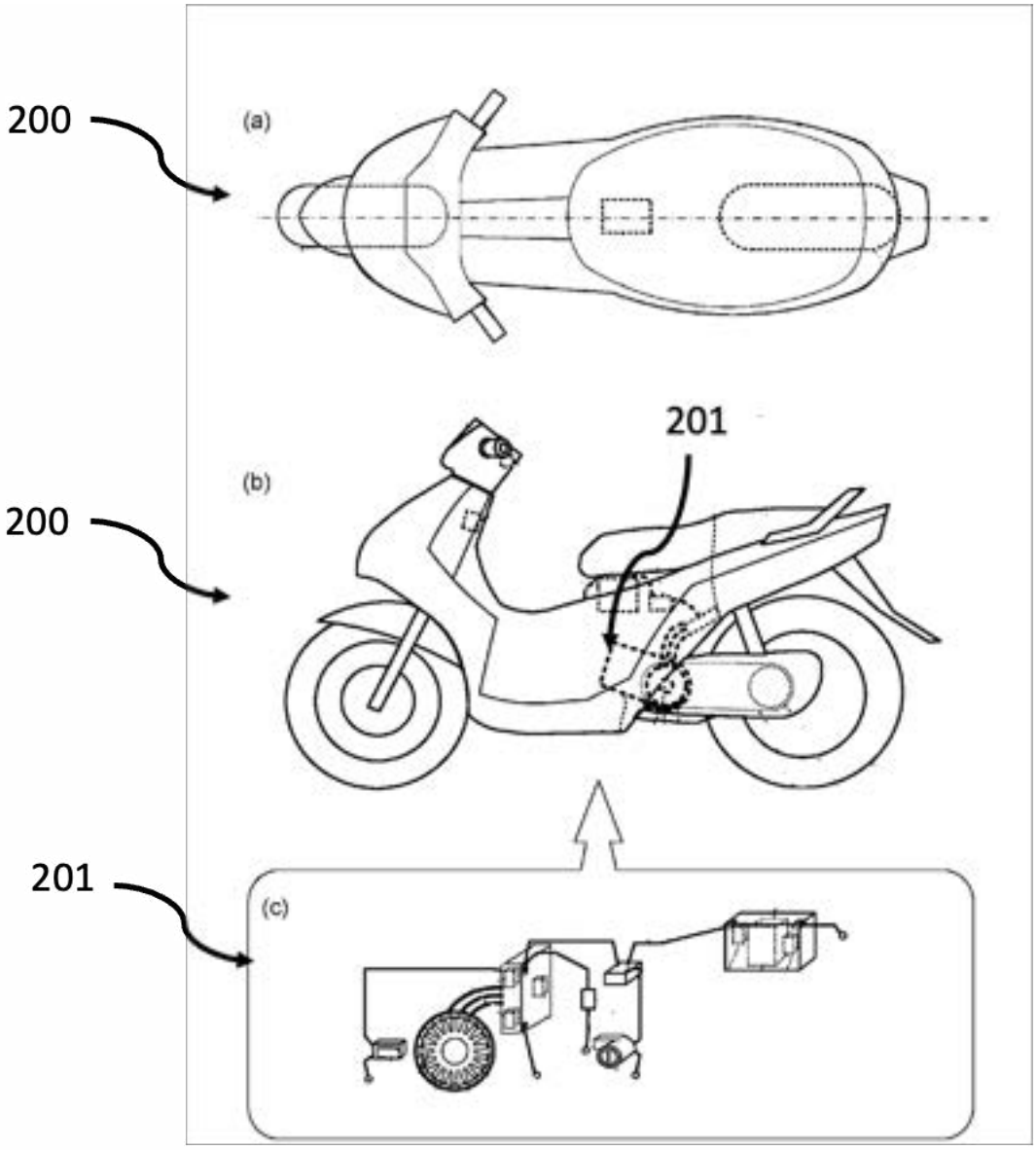

Figure 2

Soumya Prakash Patra
Authorized Signatory of the Applicant

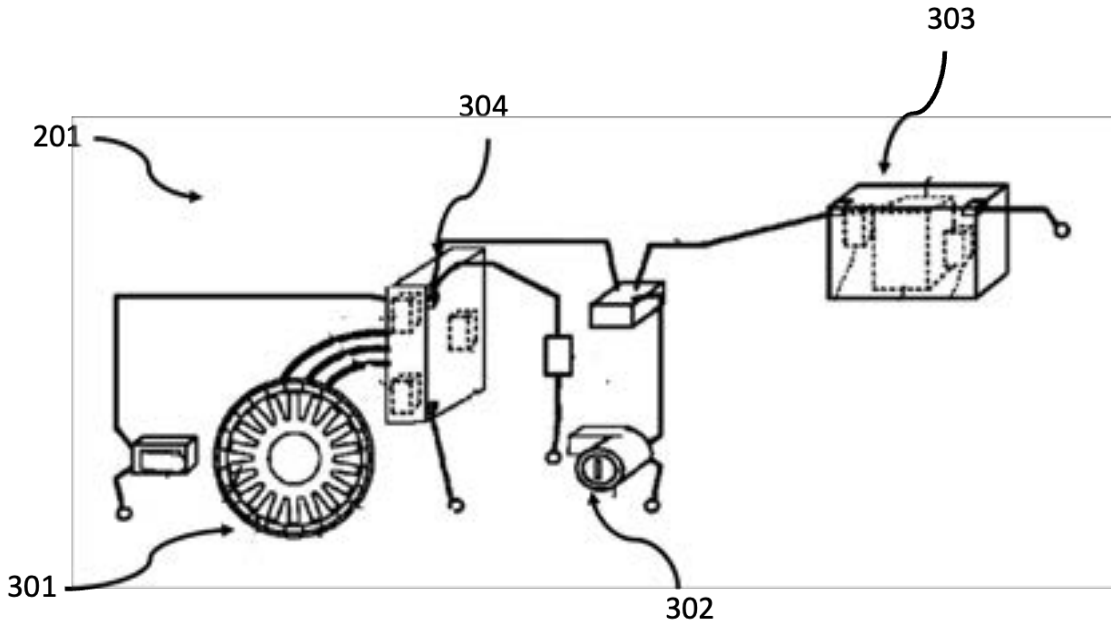

Figure 3

Soumya Prakash Patra
Authorized Signatory of the Applicant

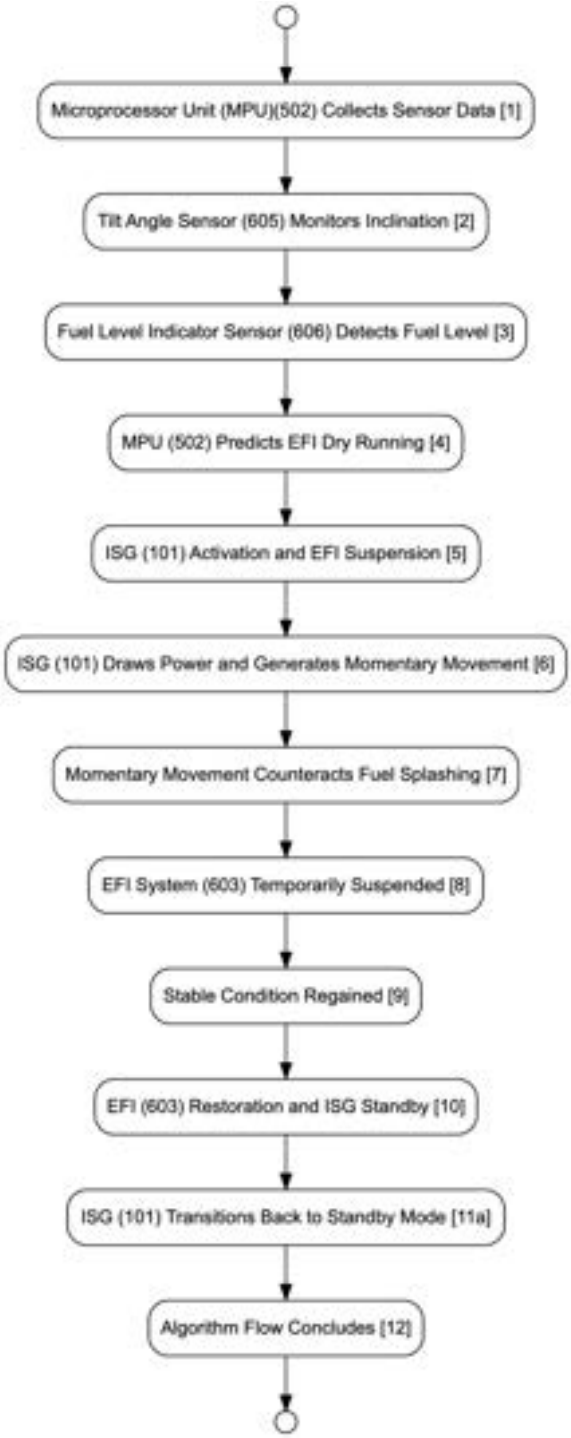

Figure 4

Soumya Prakash Patra
Authorized Signatory of the Applicant

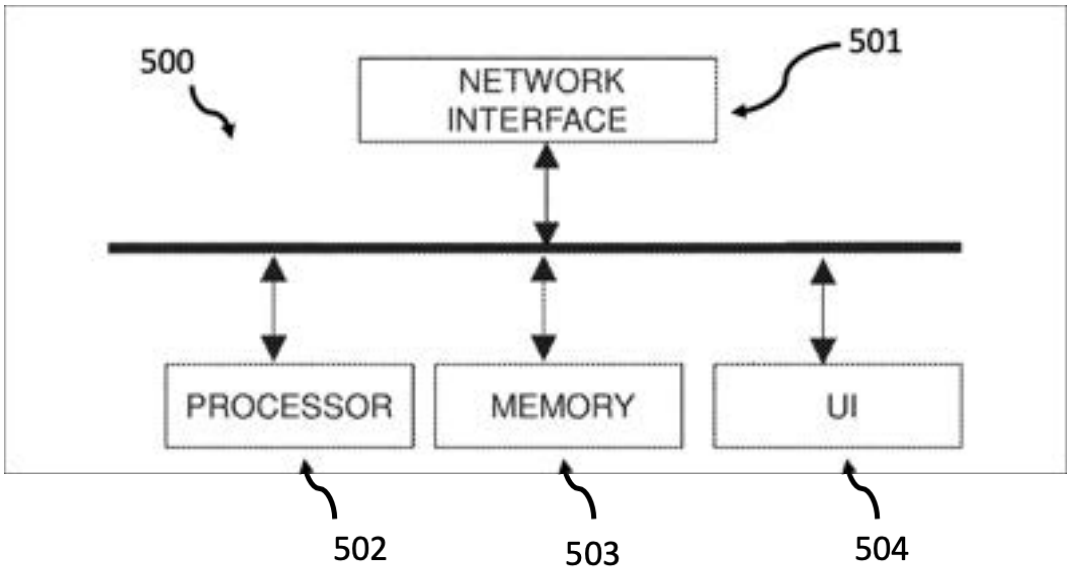

Figure 5

Soumya Prakash Patra
Authorized Signatory of the Applicant

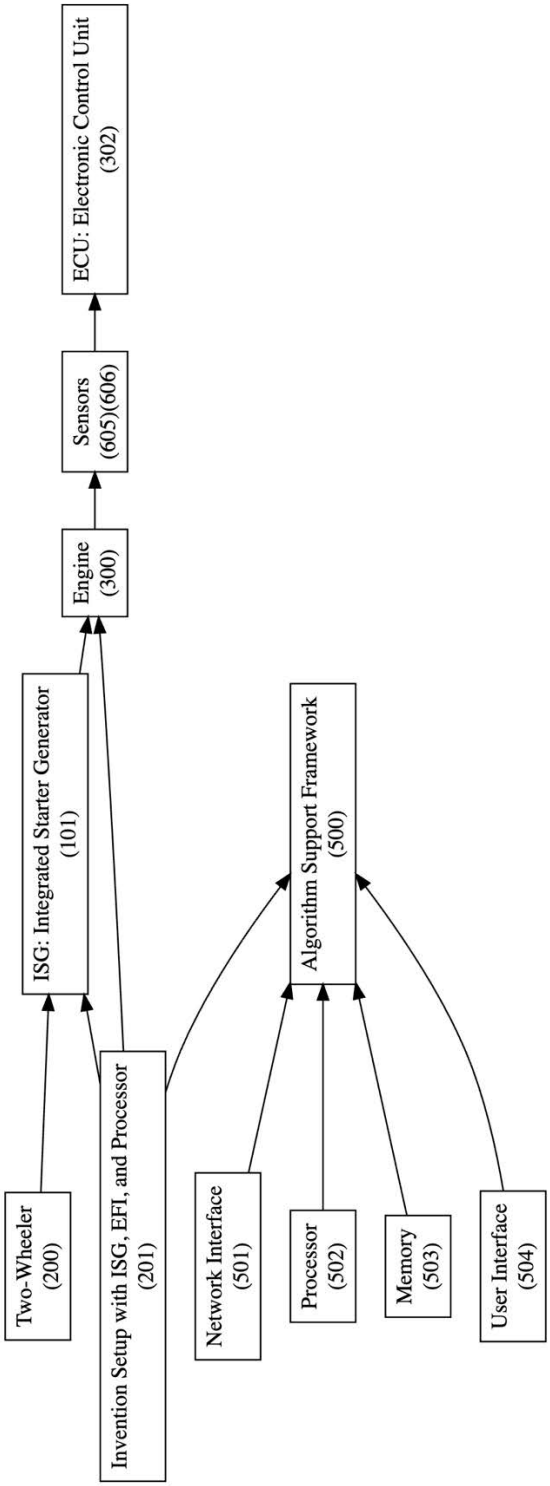

Figure 6

Soumya Prakash Patra
Authorized Signatory of the Applicant