(12)Indian Patent Specification

---

(11) Patent Number: 573342 (21) Application Number: 798/CHE/2011

(22) Filing Date: 16/03/2011 (43) Publication Date: 07/02/2014 (45) Grant announcement date: 06/11/2025

(71) Applicant(s): TVS MOTOR COMPANY LIMITED

(72) Inventor(s): Nagaraja, Krishnabhatta
Dora, Karedla Bapanna
Bhat, Manjunath
Rao, Kandregula Srinivasa
Patra, Soumya Prakash (1 more...)

(51) International Classifications: F16C

(54) Title: BEARING FLOAT CONTROL

(57) Abstract: The present subject matter described herein relates to an internal combustion having a stabilized bearing structure. The engine comprises a crankcase with right (212) and left side (211) crankcase halves, a crankshaft (206) rotatably supported on the crankcase through a plurality of ball bearings (216,217), and said bearing structure provided between an outer race of one of said ball bearings (217) and said crankcase. Particularly, said bearing structure comprises a tapered circlip (302) fitted in an engaging groove (301) and pressing against a washer (304) disposed between said bearing (217) and said circlip (302) for exerting continuous pressure on the bearing (217).

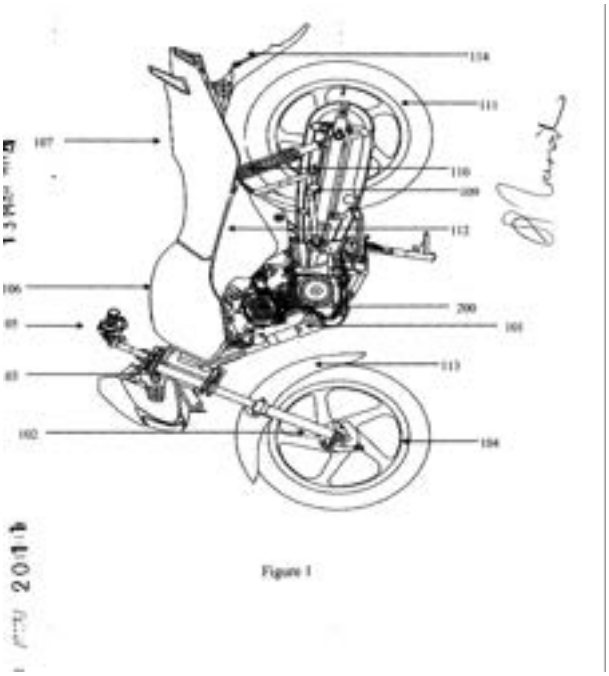

Figure 1

700182740

Abstract

An Internal Combustion Engine

The present subject matter described herein relates to an internal combustion having a stabilized bearing structure. The engine comprises a crankcase with right (212) and left side (211) crankcase halves, a crankshaft (206) rotatably supported on the crankcase through a plurality of ball bearings (216,217), and said bearing structure provided between an outer race of one of said ball bearings (217) and said crankcase. Particularly, said bearing structure comprises a tapered circlip (302) fitted in an engaging groove (301) and pressing against a washer (304) disposed between said bearing (217) and said circlip (302) for exerting continuous pressure on the bearing (217).

<To be published with Fig.3>

For TVS MOTOR COMPANY LIMITED

R NAGARAJAN
General Manager - IP Compliance

27-Jul-2018/54550/798-CHE-2011/Abstract

PATENT OFFICE CHENNAI 27/07/2018 14:33

700182741

Field of the invention

The present invention relates to a bearing float control and more particularly to a stabilised bearing structure for a crankshaft.

Description of the prior art

Generally, in a single-cylinder internal combustion engine for a motorcycle or the like, a crankshaft is rotatably supported on a crankcase through a pair of rotary bearings, a piston in a cylinder bore is connected to a crank pin of the crankshaft through a connecting rod. During engine operation in expansion stroke, pressure exerted on the piston is transmitted through the connecting rod to the crankshaft, and from the crankshaft to the crankcase through a set of rotary bearings. Therefore in this arrangement it is always desirable that the inner and outer races of the bearings are securely attached to their respective engine components. Therefore the bearings have been respectively press fitted over journal shaft portions of the crankshaft and inside bearing portions of the crankcase, respectively. As a result, a rattling sound, which might otherwise occur due to backlashes between the fitted components, is suppressed, and a desired bearing function for the crankshaft is maintained, ensuring smooth and light rotation.

In order to solve this problem, conventionally, an engine structure and method of assembly has been adopted, in which the outer race of the right bearing is press fitted into a right crankcase half, and the inner race of the left bearing is press fitted over a left-side journal shaft portion of the crankshaft, prior to mounting the crankshaft onto the crankcase.

27-Jul-2018/54550/798-CHE-2011/Amended Pages Of Specification

PATENT OFFICE CHENNAI 27/07/2018 14:33

At the time of mounting the crankshaft into the crankcase, a right-side journal shaft portion of the crankshaft is press fitted in the inner race of the right bearing (of which the outer race is already press fitted in the right-side crankcase half). Then, the outer race of the left bearing, with the inner race thereof already press fitted over the left-side journal portion of the crankshaft, is play fitted (fitted, with a play) into a left-side crankcase half, thereby facilitating the mounting of the crankshaft onto the crankcase and the maintenance thereof.

However, in this type of conventional structure, some play remains between the left outer bearing race and the left crankcase half after assembly. As a result, during operation of the engine, a little "backlash" is unavoidably generated between the outer race of the left bearing and a bearing surface of the crankcase. Therefore, a rattling sound due to the "backlash" is generated upon the operation of the internal combustion engine, and the desired bearing function cannot be optimised. Hence the main objective of the present invention is provide a stabilized bearing structure for supporting a crankshaft in an internal combustion engine, and a backlash-absorbing mechanism for absorbing a backlash of a bearing race.

Brief Description of the invention

The bearing locating boss is extended outwardly beyond the length of the bearing in the axial direction (away from the cylinder axis), to form an extended portion. The inner circumferential surface of the extended portion is provided with an engaging groove formed in an inwardly facing surface thereof, which constitutes part of a movement restraining structure. The extended portion of bearing locating boss has an engagement portion that extends outwardly beyond the corresponding length of

27-Jul-2018/54550/798-CHE-2011/Amended Pages Of Specification

PATENT OFFICE CHENNAI 27/07/2018 14:33

the bearing and the axial movement restraining structure engages the engagement portion of the bearing locating boss.

Accordingly, a tapered circlip is located close to the bearing to adjust the float of bearing and avoid noise. A circlip groove is also provided to adjust the circlip. There is a washer or a shim between the circlip and the bearing. The tapered circlip fits into the groove and presses the washer or shim that exerts constant pressure to control the bearing float.

Brief description of the drawings

Figure 1 illustrates side view of a motorcycle.

Figure 2 illustrates a four stroke internal combustion engine.

Figure 3 illustrates the functional diagram of the present invention.

Figure 4 illustrates another view of the present invention.

Figure 5 illustrate the tapered circlip and washer used in the present invention.

Detailed description of the invention

A selected illustrative embodiment of the present invention will be now described with respect to the accompanying figures 1,2,3 and 4.

A motorcycle as illustrated in figure 1 comprises of a frame 101, front fork 102 attached to a pivot tube 103 of the vehicle frame 101, a front wheel 104 attached to these front forks 102, a handle bar 105 connected to the front forks 102, a fuel tank 106 attached so as to straddle an upper part of the vehicle frame 101, a seat 107 attached to the upper rear portion of the vehicle frame 101, an engine unit 200 attached to the lower front section of the vehicle frame 101, a swing arm 109 attached to a lower rear section of the vehicle frame 101, suspended by a rear shock

PATENT OFFICE CHENNAI 27/07/2018 14:33

27-Jul-2018/54550/798-CHE-2011/Amended Pages Of Specification

absorber 110 from the vehicle frame 101 and a rear wheel 111 attached to a rear end of swing arm 109. The intake system of the engine (not shown in the figure) comprises of a carburettor, intake duct and an air cleaner. The exhaust system of the engine (not shown in the figure) comprises of exhaust pipe and a muffler.

The motorcycle is also provided with a side cover 112 for covering a side section of the vehicle frame 101, a seat cover (not shown in the figure) for covering a rear section of the vehicle frame 101 below the seat 107, a front fender 113 for covering an upper part of the front wheel 104, and a rear fender 114 for covering an upper part of the rear wheel 111.

The core part of the engine 200 as illustrated in figure 2 is the cylinder 201 with the piston 202 moving up and down inside the cylinder 201. Some of the key engine parts along with their functions are spark plug (nor shown in the figure) which supplies the spark which ignites the air/fuel mixture so that combustion could occur; valves 203 wherein the intake and exhaust valves open at the proper time to let in air and fuel to let out exhaust; a piston 202 which is a cylindrical piece of metal that moves up and down inside the cylinder 201; piston rings 204 that provide a sliding seal between the outer edge of the piston 202 and the inner edge of the cylinder 201; connecting rod 205 which connects the piston 202 to the crankshaft 206; crankshaft 206 which turns the piston's up and down motion into circular motion; a sump 207 which surrounds the crankshaft 206 and contains oil which collects in the bottom of the sump 207; etc. The said crankshaft drives a driven shaft (not shown in the figure). The blow by gases from the crankcase is passed through the air filter unit that filters it and adds to the intake gases going into for combustion.

The crankshaft 206 is rotatably supported on the crankcase 208 through left 216 and right 217 rotary bearings.

PATENT OFFICE CHENNAI 27/07/2018 14:33

27-Jul-2018/54550/798-CHE-2011/Amended Pages Of Specification

The crankcase 208 includes a left-side 211 crankcase half and a right-side 212 crankcase half, which are metal cast. The left side 211 and right-side 212 crankcase halves are fixedly connected to each other by a plurality of bolts 213. The left side 211 and right-side 212 crankcase halves and are respectively provided with integrally formed left 214 and right 215 journal walls, which are opposed to each other with an interval there between. The left 214 and right 215 journal walls and are respectively provided with aligned left and right bearing holes formed therein and opened on the same axis.

Each of the left 214 and right 215 journal walls is provided with a bearing-engaging surface, surrounding the left and right bearings holes.

Left and right journal shaft portions of the crankshaft 206 are rotatably borne inside of the left and right bearing holes through the left-side 216 and right 217 side rotary bearings.

The bearing locating boss 300 is extended outwardly beyond the length of the bearing 217 in the axial direction (away from the cylinder axis), to form an extended portion. The inner circumferential surface of the extended portion is provided with an engaging groove 301 formed in an inwardly facing surface thereof, which constitutes part of a movement restraining structure. The extended portion of bearing locating boss 300 has an engagement portion that extends outwardly beyond the corresponding length of the bearing and the axial movement restraining structure 302 engages the engagement portion of the bearing locating boss 300.

Accordingly, a tapered circlip 302 is located close to the bearing 217 to adjust the float of bearing and avoid noise. A circlip groove 301 is also provided to adjust the circlip 302. There is a washer 304 or a shim between the circlip 302 and the bearing

PATENT OFFICE CHENNAI 27/07/2018 14:33

27-Jul-2018/54550/798-CHE-2011/Amended Pages Of Specification

217. The tapered circlip 302 fits into the groove 301 and presses the washer 304 or shim that exerts constant pressure to control the bearing float.

It should be understood that the foregoing description is that of a preferred embodiment of the invention and that various changes and modifications may be made without departing from the spirit and scope of the invention, as defined by the appended claims. Further any shape and configuration of the extended surface is possible within the ambit of appended claims.

27-Jul-2018/54550/798-CHE-2011/Amended Pages Of Specification

PATENT OFFICE CHENNAI 27/07/2018 14:33

We Claim:

1. An internal combustion engine (200) for a motorcycle, the internal combustion engine (200) comprising a crankcase (208) with right (212) and left side (211) crankcase halves, a crankshaft (206) rotatably supported on the crankcase (208) through a plurality of ball bearings (216,217), wherein said internal combustion engine (200) comprises a movement restraining structure, characterized in that,

   said movement restraining structure comprises an engaging groove (301), wherein a bearing locating boss (300) is extended outwardly beyond a length of one of the said ball bearings (217) in an axial direction to form an extended portion, the engaging groove (301) being provided on an inner circumferential surface of the extended portion, the engaging groove (301) receiving a tapered circlip (302), which presses against a washer (304) disposed between an outer race of said bearing (217) and said circlip (302), and exerting continuous pressure on the outer race of said bearing (217) for controlling bearing float.

2. The internal combustion engine (200) as claimed in claim 1, wherein said movement restraining structure is located on the right side crankcase half (212).

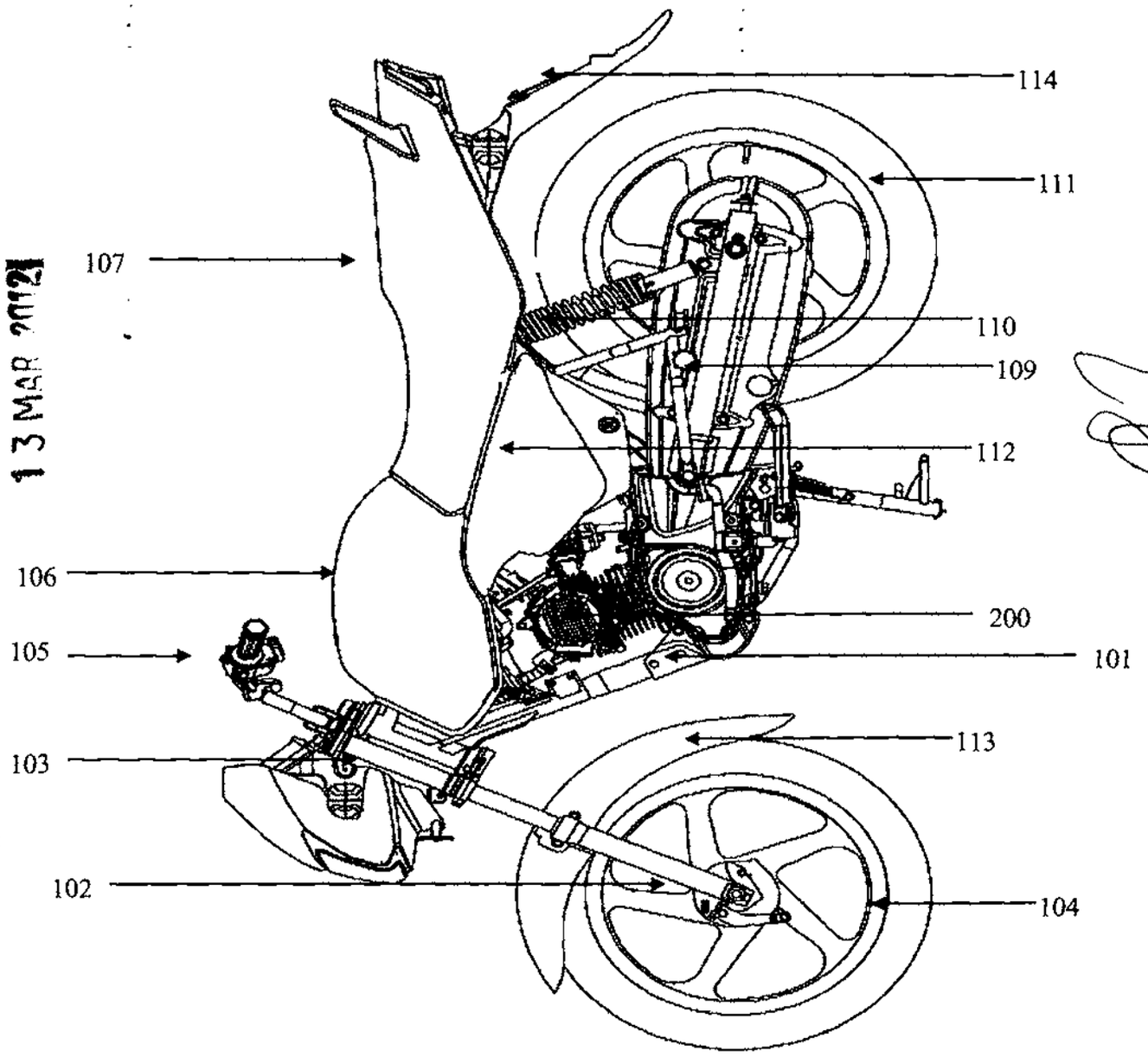

Figure 1

ORIGINAL
13 MAR 2012
0798 /CHE/ 2011

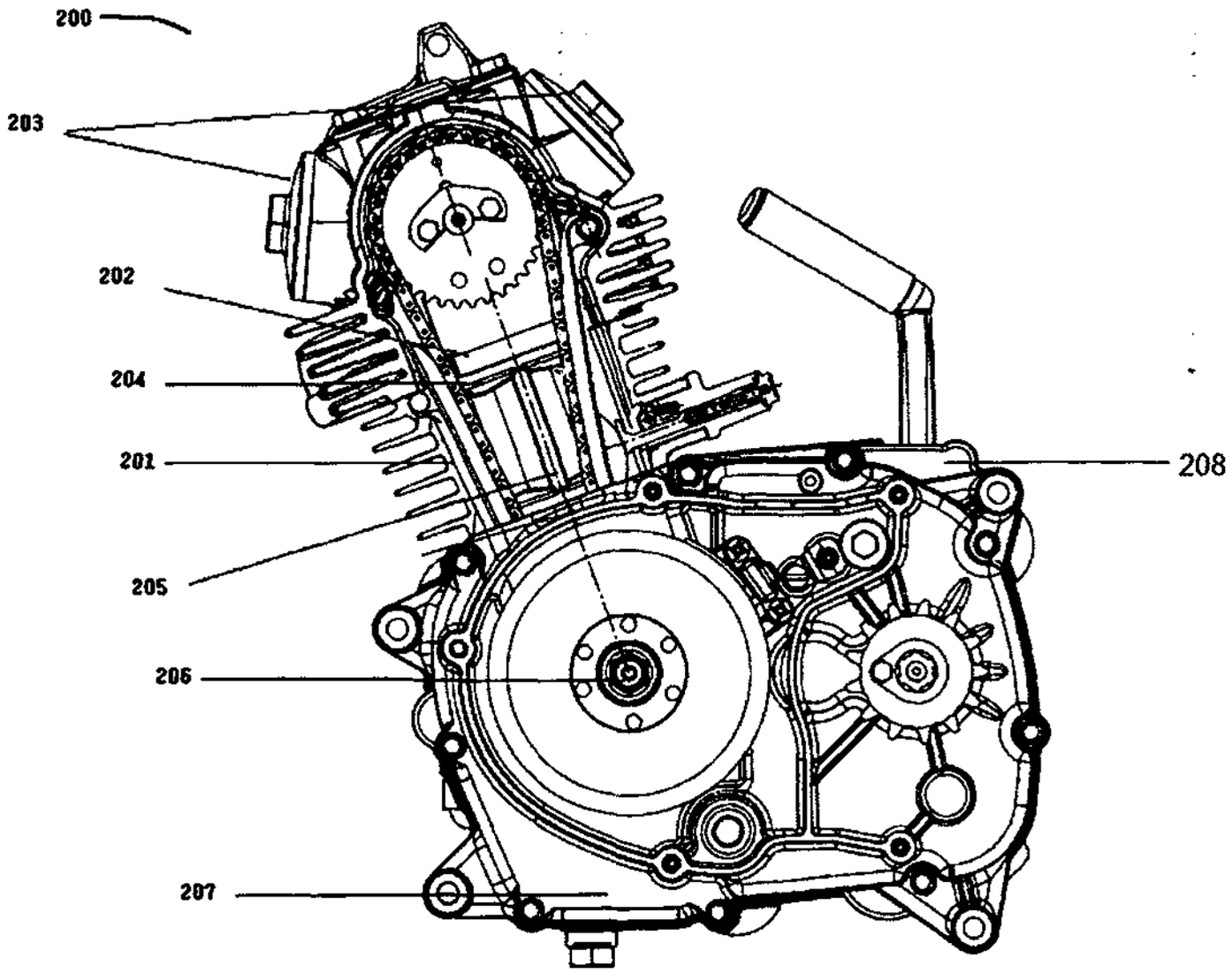

Figure 2

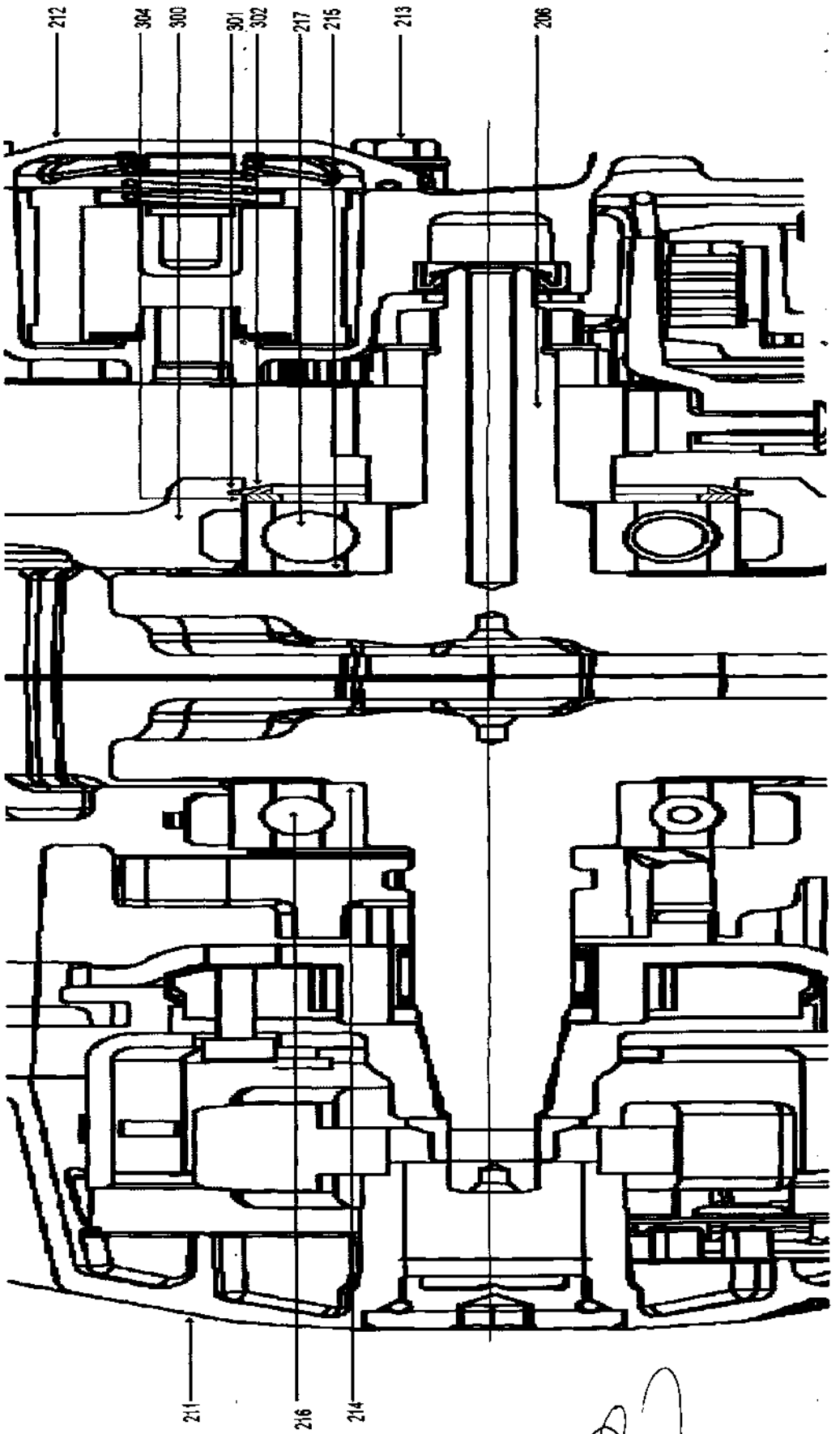

Figure 3

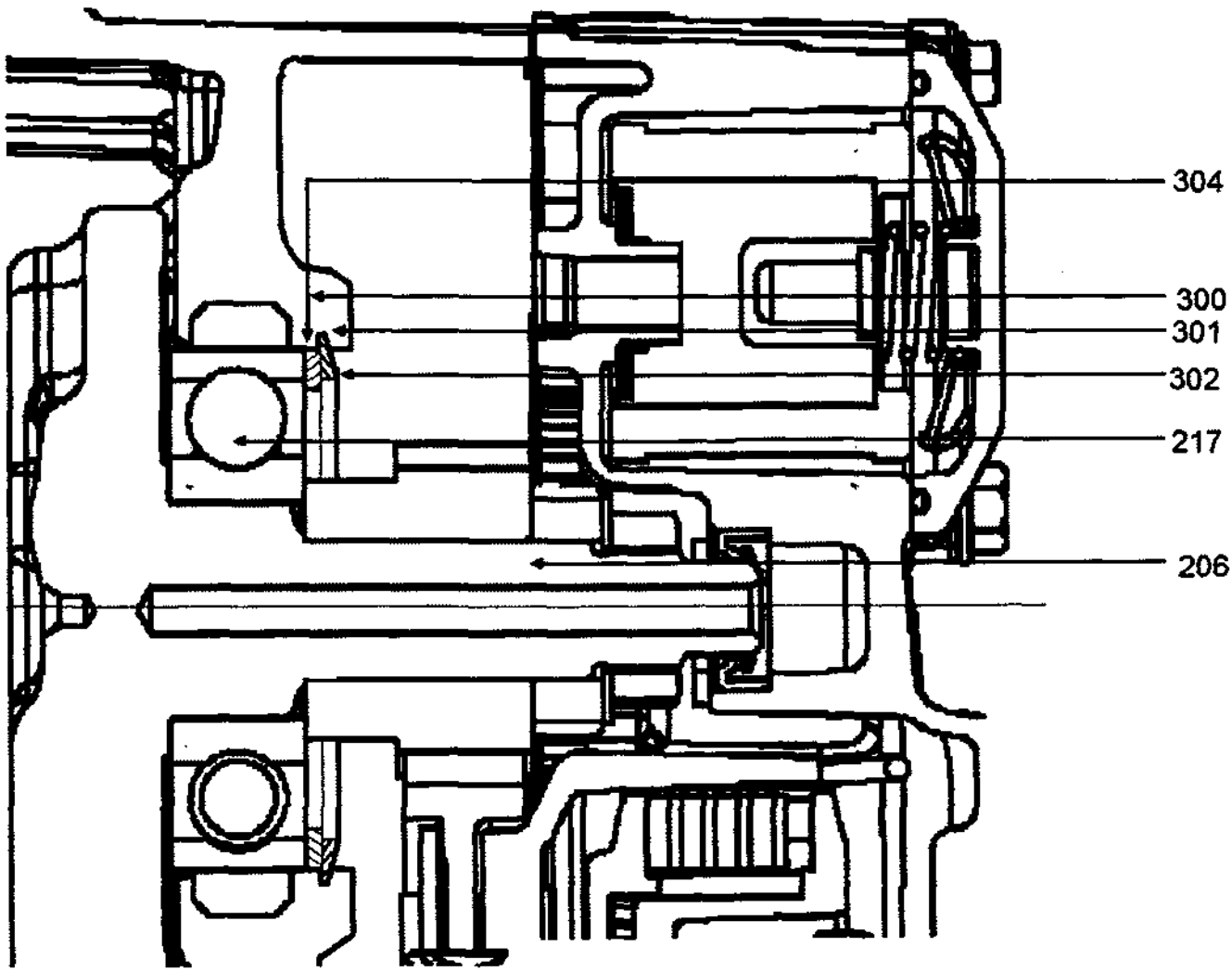

Figure 4

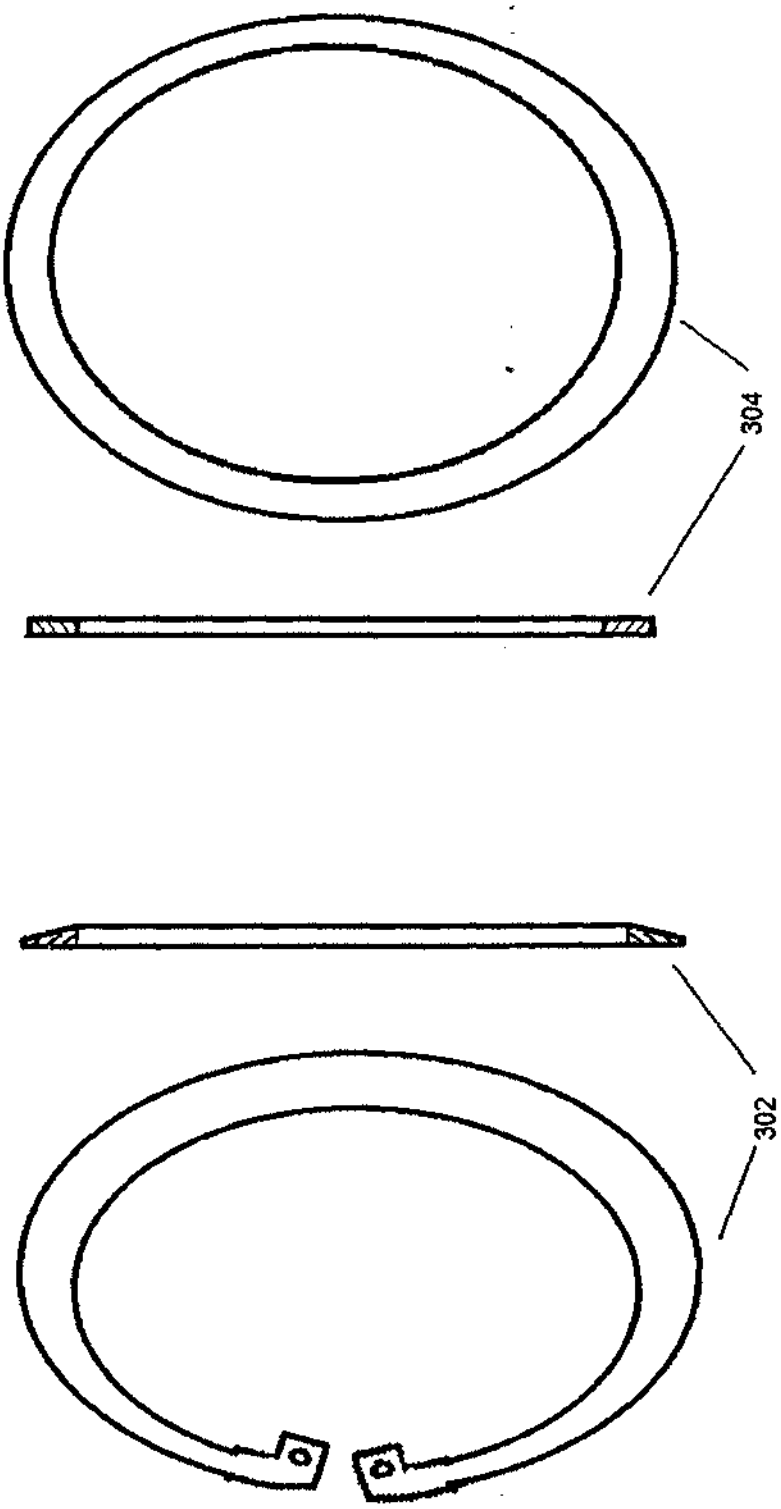

Figure 5