Q1. DIRECTIONS *for questions 1 to 5:* The five sentences (labelled 1, 2, 3, 4 and 5) given in each of the following questions, when properly sequenced, form a coherent paragraph. Decide on the proper order for the sentences and key in this sequence of five numbers as your answer, in the input box given below the question.

1. The likelihood of an unpredictable event occurring that can change the course of history is always greater at times of war and crisis, when everything is in flux.

2. At others, it can be yanked from its normal path by a combination of chance events, such as an airplane going astray, the misidentification of a missile, or a soldier losing his temper.

3. History does not always flow in predictable directions.

4. Statesmen try to bend the chaotic forces of history to their will, with varying degrees of success.

5. Sometimes it can be hijacked by fanatics of various descriptions, by men with long beards, by ideologues living in caves, by assassins with rifles.

Your Answer:31425 **Your answer is incorrect**

Show Correct Answer

Time spent / Accuracy Analysis

Time taken by you to answer this question	**272**
Avg. time spent on this question by all students	**215**
Difficulty Level	**VD**
Avg. time spent on this question by students who got this question right	**220**
% of students who attempted this question	**48.87**
% of students who got the question right of those who attempted	**4.32**

Video Solution

Text Solution

On a careful reading of the sentences, it can be observed that sentence 3 is a general sentence that can begin the paragraph. It introduces the topic of discussion: History does not always flow in predictable directions. Sentence 3 is followed by sentence 5. "History does not always flow" in sentence 3 links with "sometimes it can be hijacked by fanatics" in sentence 5. Sentences 5 and 2 form a mandatory pair. "Sometimes it can be hijacked" in sentence 5 links with "At others, it can be yanked from its normal path" in sentence 2. While sentence 5 talks about the role of fanatics and ideologues and assassins in changing the role of history, sentence 2 highlights the role of chance events. So sentence 5 is followed by sentence 2. Sentence 2 is followed by sentence 4. "can be yanked from its normal path" in sentence 2 links with "try to bend the chaotic forces of history" in sentence 4. "chaotic forces of history" in sentence 4 points to the "combination of chance events" in sentence 2 and the factors given earlier in sentence 5. Sentence 4 is followed by sentence 1. "bend chaotic forces ..... with varying degrees of success" in sentence 4 is parallel to "The likelihood of an unpredictable event occurring that can change the course of history" in sentence 1. Sentence 1 concludes the para. To sum it up briefly, the paragraph discusses the composition of chaotic history in 352, then the fact that some try to organise the chaos, or use it to their advantage in 4. Sentence 1, in indicating a progression from this discussion, (i.e. the conditions which aggravate the chaos or unpredictability) closes the para. So, 35241. Ans: (35241)

Q2. DIRECTIONS *for questions 1 to 5:* The five sentences (labelled 1, 2, 3, 4 and 5) given in each of the following questions, when properly sequenced, form a coherent paragraph. Decide on the proper order for the sentences and key in this sequence of five numbers as your answer, in the input box given below the question.

1. So tweeted Elon Musk, boss of the electric-car company, on April 1st 2018.

2. "We are sad to report that Tesla has gone completely and totally bankrupt."

3. It is uncomfortably close to the singular truth that America's leading manufacturer of electric vehicles is under pressure.

4. He even posted a picture of himself supposedly drunk and inconsolable as proof - this was meant as an April Fool's Day joke, but the gag backfired.

5. Mr Musk is fighting battles on many fronts and they all exacerbate his main threat: a financial squeeze that could eventually push Tesla over the edge.

Your Answer:52143 **Your answer is incorrect**

Show Correct Answer

Time spent / Accuracy Analysis

Time taken by you to answer this question	**73**
Avg. time spent on this question by all students	**162**
Difficulty Level	**D**
Avg. time spent on this question by students who got this question right	**145**
% of students who attempted this question	**57.37**
% of students who got the question right of those who attempted	**19.65**

Video Solution

Text Solution

On a careful reading of the sentences, it can be observed that sentence 2 is a general sentence that can begin the paragraph. It introduces the topic of discussion through a comment. Tesla has gone bankrupt. Sentence 2 is followed by sentence 1. "Tesla has gone completely and totally bankrupt." is a message in sentence 2 that links with "So tweeted Elon Musk, boss of the electric-car company" in sentence 1. "The electric-car company" in sentence 1 points to "Tesla" in sentence 2. Sentence 1 is followed by sentence 4. "Elon Musk tweeted" in sentence 1 links with "He even posted a picture of himself drunk and inconsolable" in sentence 4 "as proof" (sentence 4) to his comment in the tweet (sentences 1 and 2). "this was meant as an April Fool's Day joke" in sentence 4 points to "April 1st 2018" in sentence 1. Sentence 4 is followed by sentence 3. "the gag backfired" in sentence 4 links with "close to the singular truth that America's leading manufacturer of electric vehicles is under pressure" in sentence 3. Sentence 5 concludes the para. "fighting battles on many fronts" and "could eventually push Tesla over the edge" in sentence 5 mirrors the introduction "Tesla has gone completely and totally bankrupt." So, 21435. Ans: (21435)

Q3. DIRECTIONS *for questions 1 to 5:* The five sentences (labelled 1, 2, 3, 4 and 5) given in each of the following questions, when properly sequenced, form a coherent paragraph. Decide on the proper order for the sentences and key in this sequence of five numbers as your answer, in the input box given below the question.

1. Yet, there are exceptions.

2. It helps those creatures that possess it to detect low-level illumination, and so aids navigation by moonlight or starlight.

3. This organ, a modification of a brain structure called the parapineal gland (itself an associate of the better-known pineal gland, which regulates an animal's body clock), is usually covered with skin and sits on the top of the head.

4. Some fish, amphibians and reptiles have a third, so-called parietal, eye.

5. Unlike invertebrates, most of which have at least four eyes, vertebrates usually have only two.

Your Answer:43215 **Your answer is incorrect**

Show Correct Answer

Time spent / Accuracy Analysis

Time taken by you to answer this question	**133**
Avg. time spent on this question by all students	**138**
Difficulty Level	**D**
Avg. time spent on this question by students who got this question right	**122**
% of students who attempted this question	**55.45**
% of students who got the question right of those who attempted	**49.35**

Video Solution

Text Solution

On a careful reading of the sentences, it can be observed that sentence 5 is a general sentence that begins the paragraph. It introduces the topic of discussion: Vertebrates have two eyes unlike invertebrates which have four eyes. Sentence 5 is followed by sentence 1. Sentence 1 says that there can be an exception to the fact given in sentence 5. Sentence 1 is followed by sentence 4. Sentence 4 clarifies the point made in sentences 1 and 5. Though vertebrates usually have only two eyes (sentence 5), fish, amphibians and reptiles (which are also vertebrates) have a third, so-called parietal, eye (sentence 4). So, 514. Sentences 4 and 3 form a mandatory pair. "parietal eye" in sentence 4 links with the features "This organ, a modification of a brain structure called the parapineal gland ..... covered with skin and sits on the top of the head" in sentence 3. Sentence 3 is followed by sentence 2. "Parietal eye ..... modification of the parapineal gland" in sentences 4 and 3 links with "detect low-level illumination, and so aids navigation by moonlight or starlight" in sentence 2 and this complements "pineal gland, which regulates an animal's body clock" in sentence 3. So, 51432. Ans: (51432)

undefined

Q4. DIRECTIONS *for questions 1 to 5:* The five sentences (labelled 1, 2, 3, 4 and 5) given in each of the following

questions, when properly sequenced, form a coherent paragraph. Decide on the proper order for the sentences and key in this sequence of five numbers as your answer, in the input box given below the question.

1. Meanwhile Richard Rodgers remained, at 39, one of Broadway's marquee composers; but he was contemplating a future without Lorenz Hart, a lyricist and his long-standing collaborator, who had become a shiftless alcoholic.

2. From 1941, until Hammerstein's death in 1960, his partnership with Rodgers yielded an anthology of musical theatre's greatest hits: “Oklahoma!”, “Carousel”, “South Pacific”, “The King and I” and “The Sound of Music”.

3. It was 14 years since he had written his last hit, “Show Boat”, a landmark musical in its embrace of a gritty subject, race.

4. At the age of 46, Oscar Hammerstein was living as a country squire on his Pennsylvania farm, apparently washed up.

5. The stage was set for one of the grandest second acts in entertainment history.

Your Answer:41235 **Your answer is incorrect**

Show Correct Answer

Time spent / Accuracy Analysis

Time taken by you to answer this question	**221**
Avg. time spent on this question by all students	**208**
Difficulty Level	**D**
Avg. time spent on this question by students who got this question right	**192**
% of students who attempted this question	**37.36**
% of students who got the question right of those who attempted	**8.11**

Video Solution

Text Solution

On a careful reading of the sentences, it can be inferred that sentence 4 is a general sentence that begins the paragraph. It introduces the personality: Oscar Hammerstein. Sentences 4 and 3 form a mandatory pair. “At the age of 46, Oscar Hammerstein was living” in sentence 4 links with “It was 14 years since he had written his last hit” in sentence 3. So sentence 4 is followed by sentence 3. Sentence 3 is followed by sentence 1. Sentence 1 introduces another personality “Richard Rodgers”. “Meanwhile Richard Rodgers remained, at 39” in sentence 1 links with “At the age of 46, Oscar Hammerstein was living” given earlier in sentence 4. Also “one of Broadway's marquee composers” in sentence 1 is parallel to “a landmark musical in its embrace of a gritty subject, race” in sentence 3. Sentence 1 tells us that Richard Rodgers was contemplating a future without Lorenz Hart. Sentence 1 flows into sentence 5. “contemplating a future without Lorenz Hart, a lyricist and his long-standing collaborator, who had become a shiftless alcoholic” in sentence 1 links with “The stage was set for one of the grandest second acts in entertainment history” in sentence 5. Sentence 5 is followed by sentence 2. “From 1941, until Hammerstein's death in 1960, his partnership with Rodgers” in sentence 2 strengthens “Rodger contemplating a future without Lorenz Hart, a lyricist and his long-standing collaborator, who had become a shiftless alcoholic” in sentence 1. “anthology of musical theatre's greatest hits: “Oklahoma!”, “Carousel”, “South Pacific”, “The King and I” and “The Sound of Music”” in sentence 2 exemplifies “grandest second acts in entertainment history” in sentence 5. So, 43152. Ans: (43152)

Q5. DIRECTIONS *for questions 1 to 5:* The five sentences (labelled 1, 2, 3, 4 and 5) given in each of the following questions, when properly sequenced, form a coherent paragraph. Decide on the proper order for the sentences and key in this sequence of five numbers as your answer, in the input box given below the question.

1. Australians are not, as they sometimes joke, the only people to eat their iconic national animal.

2. Many view the marsupials as pests which destroy pasture and cause car crashes; but animal-rights types counter that killing them is inhumane and that kangaroo meat is rife with bacteria.

3. Swedes munch on moose; in Spain, bull-tail stew is a delicacy.

4. Both sides are hopping mad about a new film, which shows botched slaughters and suggests that hunting is diminishing the kangaroo population in Australia.

5. But the culling of Kangaroos divides opinion Down Under.

Your Answer:13524 **Your answer is correct**

Time spent / Accuracy Analysis

Time taken by you to answer this question	**180**
Avg. time spent on this question by all students	**163**
Difficulty Level	**D**
Avg. time spent on this question by students who got this question right	**141**
% of students who attempted this question	**43.4**
% of students who got the question right of those who attempted	**28.57**

Video Solution

Text Solution

On a careful reading of the sentences, it can be inferred that sentence 1 is a general sentence that begins the paragraph. Sentence 1 introduces the topic of discussion: Australians are not the only people to eat their iconic national animal. Sentences 1 and 3 form a mandatory pair. "Swedes munch on moose and bull-tail stew is a delicacy in Spain" in sentence 3 links with "Australians are not the only people to eat their iconic national animal" in sentence 1. Sentence 3 is followed by sentence 5. "Kangaroos" in sentence 5 point to "iconic national animal" in sentence 1. Also "divides opinion Down Under" in sentence 5 points to "Australians" in sentence 1. Sentences 5 and 2 form a mandatory pair. " culling of Kangaroos divides opinion Down Under" in sentence 5 links with the view "marsupials are pests which destroy pasture and cause car crashes" and the opposite view "killing them is inhumane and kangaroo meat is rife with bacteria" in sentence 2. Sentence 2 is followed by sentence 4. "Both sides" in sentence 4 links with "Many view ..... but animal-rights types counter" in sentence 2. Sentence 4 concludes the para and introduces "A new film" which can then become the subject-matter of discussion in the next paragraph. So, 13524. Ans: (13524)

Q6. DIRECTIONS *for questions 6 to 8:* Five sentences related to a topic are given in each of the questions below. Four of them can be put together to form a meaningful and coherent short paragraph. Identify the odd one out. Choose its number as your answer and key it in.

1. Thus it is not surprising to find that wherever organizations today are caught up in the stream of technological and social change, wherever research and development is important, wherever men must cope with first-time problems, the decline of bureaucratic forms is most pronounced.

2. It will be a long time before the last bureaucratic hierarchy is obliterated.

3. This requires a degree of imagination and creativity that bureaucracy, with its man-in-a-slot organization, its permanent structures and its hierarchies, is not well equipped to provide.

4. As machines take over routine tasks and the accelerative thrust increases the amount of novelty in the environment, more and more of the energy of society (and its organizations) must turn towards the solution of non-routine problems.

5. In these frontier organizations, a new system of human relations is evolving that is helping to cast off those bureaucratic practices that are immobilizing organizations and making them less sensitive and less rapidly responsive to change.

Your Answer:2 **Your answer is correct**

Time spent / Accuracy Analysis

Time taken by you to answer this question	**175**
Avg. time spent on this question by all students	**138**
Difficulty Level	**E**
Avg. time spent on this question by students who got this question right	**148**
% of students who attempted this question	**46**
% of students who got the question right of those who attempted	**19.78**

Video Solution

Text Solution

On a careful reading of the sentences, it can be observed that sentence 4 is a general sentence that can begin the paragraph. It introduces the topic of discussion: As machines take over routine tasks, organizations must turn towards the solution of non-routine problems. Sentences 4 and 3 form a mandatory pair. "This requires" in sentence 3 links with "organizations must turn towards the solution of non-routine problems" in sentence 4. Sentence 3 introduces "bureaucratic organizations". "bureaucracy, with its man-in-a-slot organization, its permanent structures and its hierarchies, is not well equipped to provide" in sentence 3 points to "turn towards the solution of non-routine problems" in sentence 4. So sentence 4 is followed by sentence 3. Sentence 1 furthers the discussion. "the decline of bureaucratic forms is most pronounced" in sentence 1 justifies "bureaucracy, with its man-in-a-slot organization, its permanent structures and its hierarchies, is not well equipped to provide" in sentence 3. Sentence 1 is followed by sentence 5. "a new system of human relations is evolving" in sentence 5 opposes "bureaucratic forms" in sentence 1. "helping to cast off those bureaucratic practices that are immobilizing organizations and making them less sensitive and less rapidly responsive to change" in sentence 5 links with "the decline of bureaucratic forms is most pronounced" in sentence 1 and "bureaucracy, with its man-in-a-slot organization, its permanent structures and its hierarchies, is not well equipped to provide" in sentence 3. So, 4315. Sentence 2 is the odd sentence out. Though "bureaucratic hierarchy" has been given in sentence 3 (bureaucracy, with its man-in-a-slot organization, its permanent structures and its hierarchies), "long time before the last bureaucratic hierarchy is obliterated" in sentence 2 needs a precedent and more substantiation. Ans: (2)

undefined

Q7. DIRECTIONS *for questions 6 to 8:* Five sentences related to a topic are given in each of the questions below. Four of them can be put together to form a meaningful and coherent short paragraph. Identify the odd one out. Choose its number as your answer and key it in.

1. Outside the main conference building, they put up a tent housing a rowdy coalition of people from 20 states and 110 cities under the banner “We are still in”.

2. It showed that, even without Mr Trump and the federal government, local activists in America are committed to the spirit of the agreement.

3. Some non-American delegates at the conference found this fringe event more reassuring than the climate talks themselves.

4. The EU and China, each in its own way, are taking up America's mantle of climate leadership.

5. At the UN climate summit in Bonn last November, some Americans came up with their own riposte to President Donald Trump's decision to withdraw from the Paris Agreement.

Your Answer:2 **Your answer is incorrect**

Show Correct Answer

Time spent / Accuracy Analysis

Time taken by you to answer this question	**137**
Avg. time spent on this question by all students	**113**
Difficulty Level	**E**
Avg. time spent on this question by students who got this question right	**103**
% of students who attempted this question	**55.36**
% of students who got the question right of those who attempted	**53.83**

Video Solution

Text Solution

On a careful reading of the sentences, it can be observed that sentence 5 is a general sentence that can begin the paragraph. It introduces the topic of discussion: President Donald Trump's decision to withdraw from the Paris Agreement invited a quick response (riposte) from the Americans. Sentence 5 is followed by sentence 1. "they" in sentence 1 points to "some Americans" in sentence 5. "put up a tent housing a rowdy coalition of people from 20 states and 110 cities under the banner "We are still in"" in sentence 1 points to "riposte to President Donald Trump's decision to withdraw from the Paris Agreement" in sentence 5. While sentence 1 talks about the riposte of the American delegates, sentence 3 explains the reaction of the non-American delegates at the UN climate summit. "this fringe event" in sentence 3 points to "they put up a tent housing a rowdy coalition of people from 20 states and 110 cities under the banner "We are still in"" in sentence 1. "more reassuring than the climate talks themselves" in sentence 3 points to "riposte (tent housing a rowdy coalition of people under the banner "We are still in") to President Donald Trump's decision to withdraw from the Paris Agreement" (sentences 1 and 5) and "UN climate summit in Bonn last November" given earlier in sentence 5. So, 513. Sentence 2 concludes the topic. "even without Mr Trump and the federal government" in sentence 2 links with "President Donald Trump's decision to withdraw from the Paris Agreement" in sentence 5 and "local activists in America are committed to the spirit of the agreement" in sentence 2 points to "tent housing a rowdy coalition of people from 20 states and 110 cities under the banner "We are still in"" in sentence 1. Hence, 5132. "taking up America's mantle of climate leadership" in sentence 4 deviates from the topic of discussion: President Donald Trump's decision to withdraw from the Paris Agreement. "The EU and China, each in its own way, are" in sentence 4 is a new point of view that will need further elaboration. Ans: (4)

undefined

Q8. DIRECTIONS *for questions 6 to 8:* Five sentences related to a topic are given in each of the questions below. Four of them can be put together to form a meaningful and coherent short paragraph. Identify the odd one out. Choose its number as your answer and key it in.

1. When another criminal case against him collapses, Packer turns his attention to expanding his heroin empire abroad.

2. Albert William Packer is the supreme baron of London crime and he rules his manor with a cruel, ruthless fist.

3. The brief: to bring back the evidence that will nail Packer to the wall, whatever it takes.

4. To those around him, on whatever side of the law, he is the Untouchable.

5. Where better to cut out the middle man than at the historic smuggling crossroads of Europe, the Balkans?

Your Answer:3 **Your answer is correct**

Time spent / Accuracy Analysis

Time taken by you to answer this question	**146**
Avg. time spent on this question by all students	**106**
Difficulty Level	**E**
Avg. time spent on this question by students who got this question right	**108**
% of students who attempted this question	**53.64**
% of students who got the question right of those who attempted	**19.29**

Video Solution

Text Solution

On a careful reading of the sentences, it can be observed that sentence 2 is a general sentence that can begin the paragraph. It introduces the character: Albert William Packer as the supreme baron of London crime who rules his manor ruthlessly. Sentence 2 is followed sentence 4 which provides another detail about Albert William Packer: He is the Untouchable. Sentence 1 (another criminal case against him collapses) helps to justify why Albert William Packer is known as the Untouchable (Sentence 4). Also "turns his attention to expanding his heroin empire abroad" in sentence 1 points to "supreme baron of London crime" given earlier in sentence 2 and "When another criminal case (in London) against him collapses" in sentence 1. So sentence 1 follows sentence 4. Sentence 1 is followed by sentence 5. "expanding his heroin empire abroad" in sentence 1 links with "where better to cut out the middle man than at the historic smuggling crossroads of Europe, the Balkans?" in sentence 5. Sentence 5 concludes the para. Sentence 3 is the odd sentence out as it needs a precedent. It can come much later in the flow, as part of another paragraph, that talks about details such as the need to incriminate Packer and the strategy to be followed in that regard. Ans: (3)

undefined

Q9. DIRECTIONS *for questions 9 and 10:* In each question, there are sentences or fragments of sentences that form a paragraph. Identify the sentence(s) or fragments of sentence(s) that is/are **correct** in terms of grammar and usage, including spelling, punctuation and logical consistency. Enter the number(s) corresponding to the sentence(s) or fragments of sentence(s) in the input box provided below the question. [Note: Enter your answer in increasing order only. For example, if you think that the fragments (2) and (4) are **correct**, then enter 24 (but not 42) in the input box. If none of the sentences or fragments of sentences is correct, enter your answer as '0' (zero) in the input box.]

1. I accompanied the *Blue's Clues* research team on one of their weekly excursions to talk to preschoolers.

2. They were led by Alice Wilder, director of research for the show, a dark-haired lively woman who had just finished her doctorate in education at the Columbia University.

3. On the morning which I joined them they were testing a proposed script about animal behaviour at a pre-school in Greenwich village.

4. It was essentially a first draft laid out in a picture book that roughly corresponded to the way the actual episode would unfold scene by scene on television.

5. The *Blue's Clues* tester walked the kids by the script, making a careful note of all the questions they answered correctly and those that seemed to baffle them.

Your Answer:134 **Your answer is incorrect**

Show Correct Answer

Time spent / Accuracy Analysis

Time taken by you to answer this question	**210**
Avg. time spent on this question by all students	**179**
Difficulty Level	**VD**
Avg. time spent on this question by students who got this question right	**182**
% of students who attempted this question	**35.08**
% of students who got the question right of those who attempted	**1.89**

Video Solution

Text Solution

Sentence 1 has no errors. The pronoun 'their' in sentence 1 refers to the (plural) members of the research team.
In sentence 2, the order of adjectives should be "a lively dark-haired" and not "a dark-haired lively". Also the article "the" before the proper name "Columbia University" needs to be dropped.
Sentence 3 needs 'that' in place of 'which'.
Sentence 4 has errors of punctuation. Commas need to be placed in multiple locations. Sentence 4 should read: It was, essentially, a first draft laid out in a picture book that roughly corresponded to the way the actual episode would unfold, scene by scene, on television.
In sentence 5, the correct phrasal verb is "walked the kids through". "walk someone through" means "To guide (someone) deliberately through (a process), one step at a time". So "walked the kids by the script" is incorrect.
Hence the correct answer is (1). Ans: (1)

undefined

Q10. DIRECTIONS *for questions 9 and 10:* In each question, there are sentences or fragments of sentences that form a paragraph. Identify the sentence(s) or fragments of sentence(s) that is/are **correct** in terms of grammar and usage, including spelling, punctuation and logical consistency. Enter the number(s) corresponding to the sentence(s) or fragments of sentence(s) in the input box provided below the question. [Note: Enter your answer in increasing order only. For example, if you think that the fragments (2) and (4) are **correct**, then enter 24 (but not 42) in the input box. If none of the sentences or fragments of sentences is correct, enter your answer as '0' (zero) in the input box.]

1. Renault unveiled the EZ-GO, a concept for a robotaxi, at Geneva motor show, which opened on March 5th.

2. Nissan, in conjunction with DENA, a Japanese software firm, began trials of driverless taxis in Japan recently.

3. The two companies are pursuing their own paths to the future of mobility.

4. Yet, both are bound up together in a close alliance, which celebrates its 20th anniversary next year.

5. In 2016, they were joined by Mitsubishi. Last year, the trio sold 10.6m cars between them, one in every nine worldwide.

Your Answer:234 **Your answer is incorrect**

Show Correct Answer

Time spent / Accuracy Analysis

Time taken by you to answer this question	**132**
Avg. time spent on this question by all students	**113**
Difficulty Level	**D**
Avg. time spent on this question by students who got this question right	**113**
% of students who attempted this question	**35.24**
% of students who got the question right of those who attempted	**3.7**

Video Solution

Text Solution

In sentence 1, "Geneva motor show" needs to be preceded by the definite article 'the'.
In sentence 2, the adverb of time "recently" is misplaced. "recently" modifies the action "began trials of driverless taxis" and is best placed before this phrase. The part should read: recently began trials of driverless taxis in Japan.
Sentence 3 has no errors. "path to the future" speaks of the path as a means. {Note: 'A path towards something' speaks of the direction that the path takes.}
In sentence 4, "bound together" would suffice. There is no need of saying "bound up together".
Sentence 5 is error-free. "the trio sold 10.6m cars between them" is correct. There is no requirement for replacing 'between' with 'among'. Even when we refer to more than 2, we use 'between' if we want to indicate each one kept distinct or considered separately. Ans: (35)

undefined

DIRECTIONS *for questions 11 to 16:* The passage given below is accompanied by a set of six questions. Choose the best answer to each question.

Abortion is expected to become legal in Ireland later this year, following the unexpectedly decisive result of a referendum on the topic on May 25th. Irish voters chose by a 66:34 majority to repeal a constitutional amendment restricting abortion. As a result, attention is now turning to the situation in Northern Ireland, where abortion remains illegal unless the risk to the mother's health is severe. The region has resolutely declined to adopt the more liberal approach to abortion seen in the rest of the United Kingdom.

The Abortion Act was passed in the United Kingdom in 1967, allowing doctors to perform abortions so long as certain conditions had been met. But the law in Northern Ireland was not changed, and remained as it had since Victorian times. The region's devolved legislature was dominated by the Ulster Unionist Party, which in an unusual alliance with the Catholic church firmly opposed the legalisation of abortion. In subsequent years, Protestant and Catholic churches in Northern Ireland quietly co-operated to oppose moves to update the law, with the late Ian Paisley, founder of both the Free Presbyterian church and the Democratic Unionist Party (DUP), leading the way. As a result thousands of Northern Irish women have ended up travelling to England to terminate pregnancies. In one recent 14-year period the numbers crossing the Irish Sea exceeded 800 every year. Although this exodus was no secret, it was generally mentioned in whispers. "She got the boat," was the phrase often used. Awareness of this situation in the rest of the UK was limited. Politicians in Belfast preferred not to broadcast the arrangement, which women's groups and other campaigners increasingly denounced as the exporting of misery.

When the Northern Ireland Assembly came into being in 1998, its powers included the right to legislate on abortion. In the last few years it has seen a number of debates on the subject, in an effort to introduce a new law. But the DUP has always had the votes to defeat all pro-abortion motions. The party has a powerful fundamentalist Protestant element in its ranks and especially within its leadership. Opinion polls indicate, however, that the views of the party's supporters are more liberal. And in the aftermath of the Irish referendum result, the clamour for change is likely to grow. Indeed, across the Irish Sea, pressure to support liberalisation in Northern Ireland has been building within the major Westminster-based parties. Penny Mordaunt, minister for women and equality, described the result as "a historic and great day for Ireland and a hopeful one for Northern Ireland." An education minister, Anne Milton, and the former equality minister, Justine Greening, also voiced their support.

The DUP leader, Arlene Foster, was quick to say that the Dublin result "has no impact" on the law in Northern Ireland. She said she disapproved of activists in the Republic "taking to the streets in celebration." Although support for reform appears to be growing at Westminster, a complication for Theresa May is the leverage that Mrs Foster and her party have over the Tory administration. In return for additional spending in Northern Ireland the DUP's ten MPs provide valuable support for Mrs May in Brexit votes. Both the government and the DUP are anxious to avoid a rift which might disturb this relationship. One possible outcome, given the continuing suspension of the Northern Ireland Assembly, is that the Westminster government will indeed legislate on the matter. This could allow the DUP to register its fierce opposition to anything which could lead to the introduction of abortion, and vote against any relevant bill at Westminster, while not, in all likelihood, affecting the overall result.

Q11. According to the passage, which of the following statements about Northern Ireland is definitely true?

a) People belonging to Northern Ireland are highly conservative by nature.

b) The Abortion Act in the UK allowed the doctors to perform abortions provided certain terms were met but the abortion act in Northern Ireland did not allow the doctors to do so.

c) **The laws of the United Kingdom may not necessarily be applicable in Northern Ireland because of the latter's devolved legislature.** **Your answer is correct**

d) No woman belonging to Northern Ireland is allowed to undergo abortion in that region.

Time spent / Accuracy Analysis

Time taken by you to answer this question	**99**
Avg. time spent on this question by all students	**376**
Difficulty Level	**D**
Avg. time spent on this question by students who got this question right	**387**
% of students who attempted this question	**61.65**
% of students who got the question right of those who attempted	**30.25**

Video Solution

Text Solution

Number of words and Explanatory notes for RC:

Number of words: 607

Option A: Irish voters chose by a 66:34 majority to repeal a constitutional amendment restricting abortion. Thousands of Northern Irish women have ended up travelling to England to terminate pregnancies. Choice A is not an opinion that can be attributed to the people of Northern Ireland. Choice A is not the answer. The third para reiterates this fact. Opinion polls indicate, however, that the views of the party's supporters are more liberal. And in the aftermath of the Irish referendum result, the clamour for change is likely to grow. Indeed, across the Irish Sea pressure to support liberalisation in Northern Ireland has been building within the major Westminster-based parties.
Option B: The Abortion Act was passed in the United Kingdom in 1967, allowing doctors to perform abortions so long as certain conditions had been met. But the law in Northern Ireland was not changed, and remained as it had since Victorian times. However, it is mentioned in para 1: Attention is now turning to the situation in Northern Ireland, where abortion remains illegal unless the risk to the mother's health is severe. This means that there were times when abortions were carried out by doctors even in Northern Ireland. Hence choice B is not true.
Option C: The Abortion Act was passed in the United Kingdom in 1967, allowing doctors to perform abortions so long as certain conditions had been met. But the law in Northern Ireland was not changed, and remained as it had since Victorian times. The region's devolved legislature was dominated by the Ulster Unionist Party, which in an unusual alliance with the Catholic church firmly opposed the legalisation of abortion. Hence choice C is the correct answer.
Option D: In Northern Ireland, abortion remains illegal unless the risk to the mother's health is severe. So choice D is not entirely true. Choice (C)

undefined

DIRECTIONS *for questions 11 to 16:* The passage given below is accompanied by a set of six questions. Choose the best answer to each question.

Abortion is expected to become legal in Ireland later this year, following the unexpectedly decisive result of a referendum on the topic on May 25th. Irish voters chose by a 66:34 majority to repeal a constitutional amendment restricting abortion. As a result, attention is now turning to the situation in Northern Ireland, where abortion remains illegal unless the risk to the mother's health is severe. The region has resolutely declined to adopt the more liberal approach to abortion seen in the rest of the United Kingdom.

The Abortion Act was passed in the United Kingdom in 1967, allowing doctors to perform abortions so long as certain conditions had been met. But the law in Northern Ireland was not changed, and remained as it had since Victorian times. The region's devolved legislature was dominated by the Ulster Unionist Party, which in an unusual alliance with the Catholic church firmly opposed the legalisation of abortion. In subsequent years, Protestant and Catholic churches in Northern Ireland quietly co-operated to oppose moves to update the law, with the late Ian Paisley, founder of both the Free Presbyterian church and the Democratic Unionist Party (DUP), leading the way. As a result thousands of Northern Irish

women have ended up travelling to England to terminate pregnancies. In one recent 14-year period the numbers crossing the Irish Sea exceeded 800 every year. Although this exodus was no secret, it was generally mentioned in whispers. “She got the boat,” was the phrase often used. Awareness of this situation in the rest of the UK was limited. Politicians in Belfast preferred not to broadcast the arrangement, which women’s groups and other campaigners increasingly denounced as the exporting of misery.

When the Northern Ireland Assembly came into being in 1998, its powers included the right to legislate on abortion. In the last few years it has seen a number of debates on the subject, in an effort to introduce a new law. But the DUP has always had the votes to defeat all pro-abortion motions. The party has a powerful fundamentalist Protestant element in its ranks and especially within its leadership. Opinion polls indicate, however, that the views of the party’s supporters are more liberal. And in the aftermath of the Irish referendum result, the clamour for change is likely to grow. Indeed, across the Irish Sea, pressure to support liberalisation in Northern Ireland has been building within the major Westminster-based parties. Penny Mordaunt, minister for women and equality, described the result as “a historic and great day for Ireland and a hopeful one for Northern Ireland.” An education minister, Anne Milton, and the former equality minister, Justine Greening, also voiced their support.

The DUP leader, Arlene Foster, was quick to say that the Dublin result “has no impact” on the law in Northern Ireland. She said she disapproved of activists in the Republic “taking to the streets in celebration.” Although support for reform appears to be growing at Westminster, a complication for Theresa May is the leverage that Mrs Foster and her party have over the Tory administration. In return for additional spending in Northern Ireland the DUP’s ten MPs provide valuable support for Mrs May in Brexit votes. Both the government and the DUP are anxious to avoid a rift which might disturb this relationship. One possible outcome, given the continuing suspension of the Northern Ireland Assembly, is that the Westminster government will indeed legislate on the matter. This could allow the DUP to register its fierce opposition to anything which could lead to the introduction of abortion, and vote against any relevant bill at Westminster, while not, in all likelihood, affecting the overall result.

Q12. For whom was the phrase “she got the boat” used in Northern Ireland?

- a) A woman in Northern Ireland who left for England by boat.
- b) A woman in Northern Ireland who left for England and terminated her pregnancy there.
- c) **A woman in Northern Ireland who was looking to undergo abortion.**
- d) **A woman in Northern Ireland who left the region after getting pregnant.** **Your answer is incorrect**

Show Correct Answer

Time spent / Accuracy Analysis

Time taken by you to answer this question	**142**
Avg. time spent on this question by all students	**77**
Difficulty Level	**E**
Avg. time spent on this question by students who got this question right	**73**
% of students who attempted this question	**64.61**
% of students who got the question right of those who attempted	**90.5**

Video Solution

Text Solution

Number of words and Explanatory notes for RC:

Number of words: 607

Refer to the second para of the passage. Thousands of Northern Irish women have ended up travelling to England to terminate pregnancies. In one recent 14-year period the numbers crossing the Irish Sea exceeded 800 every year. Although this exodus was no secret, it was generally mentioned in whispers. "She got the boat," was the phrase often used.
Option A: Choice A is incomplete and nonspecific. It is not the answer as it has not been mentioned that the woman left for England to terminate her pregnancy.
Option B: Thousands of Northern Irish women have ended up travelling to England to terminate pregnancies. Choice B is the correct answer.
Option C: Choice C is not the answer. It needs to be mentioned that the woman was looking to undergo an abortion in England.
Option D: Choice D is wrong. The phrase "she got the boat" used in Northern Ireland referred to a woman who went to England to terminate her pregnancy and not one who merely got pregnant and left the region. Choice (B)

undefined

DIRECTIONS *for questions 11 to 16:* The passage given below is accompanied by a set of six questions. Choose the best answer to each question.

Abortion is expected to become legal in Ireland later this year, following the unexpectedly decisive result of a referendum on the topic on May 25th. Irish voters chose by a 66:34 majority to repeal a constitutional amendment restricting abortion. As a result, attention is now turning to the situation in Northern Ireland, where abortion remains illegal unless the risk to the mother's health is severe. The region has resolutely declined to adopt the more liberal approach to abortion seen in the rest of the United Kingdom.

The Abortion Act was passed in the United Kingdom in 1967, allowing doctors to perform abortions so long as certain conditions had been met. But the law in Northern Ireland was not changed, and remained as it had since Victorian times. The region's devolved legislature was dominated by the Ulster Unionist Party, which in an unusual alliance with the Catholic church firmly opposed the legalisation of abortion. In subsequent years, Protestant and Catholic churches in Northern Ireland quietly co-operated to oppose moves to update the law, with the late Ian Paisley, founder of both the Free Presbyterian church and the Democratic Unionist Party (DUP), leading the way. As a result thousands of Northern Irish women have ended up travelling to England to terminate pregnancies. In one recent 14-year period the numbers crossing the Irish Sea exceeded 800 every year. Although this exodus was no secret, it was generally mentioned in whispers. "She got the boat," was the phrase often used. Awareness of this situation in the rest of the UK was limited. Politicians in Belfast preferred not to broadcast the arrangement, which women's groups and other campaigners increasingly denounced as the exporting of misery.

When the Northern Ireland Assembly came into being in 1998, its powers included the right to legislate on abortion. In the last few years it has seen a number of debates on the subject, in an effort to introduce a new law. But the DUP has always had the votes to defeat all pro-abortion motions. The party has a powerful fundamentalist Protestant element in its ranks and especially within its leadership. Opinion polls indicate, however, that the views of the party's supporters are more liberal. And in the aftermath of the Irish referendum result, the clamour for change is likely to grow. Indeed, across the Irish Sea, pressure to support liberalisation in Northern Ireland has been building within the major Westminster-based parties. Penny Mordaunt, minister for women and equality, described the result as "a historic and great day for Ireland and a hopeful one for Northern Ireland." An education minister, Anne Milton, and the former equality minister, Justine Greening, also voiced their

support.

The DUP leader, Arlene Foster, was quick to say that the Dublin result “has no impact” on the law in Northern Ireland. She said she disapproved of activists in the Republic “taking to the streets in celebration.” Although support for reform appears to be growing at Westminster, a complication for Theresa May is the leverage that Mrs Foster and her party have over the Tory administration. In return for additional spending in Northern Ireland the DUP’s ten MPs provide valuable support for Mrs May in Brexit votes. Both the government and the DUP are anxious to avoid a rift which might disturb this relationship. One possible outcome, given the continuing suspension of the Northern Ireland Assembly, is that the Westminster government will indeed legislate on the matter. This could allow the DUP to register its fierce opposition to anything which could lead to the introduction of abortion, and vote against any relevant bill at Westminster, while not, in all likelihood, affecting the overall result.

Q13. Which of these could have been a possible reason for the politicians in Belfast to not talk about the exodus openly?

- a) The Catholic church compelled the politicians to keep the issue a secret.
- b) **The politicians did not want the rest of the UK to pay attention to it.** **Your answer is correct**
- c) **Talking about the exodus openly would lead to a rise in the number of people leaving the region.**
- d) **The women's groups and campaigners denounced the broadcasting of the arrangement.**

Time spent / Accuracy Analysis

Time taken by you to answer this question	**109**
Avg. time spent on this question by all students	**135**
Difficulty Level	**M**
Avg. time spent on this question by students who got this question right	**138**
% of students who attempted this question	**54.35**
% of students who got the question right of those who attempted	**34.47**

Video Solution

Text Solution

Number of words and Explanatory notes for RC:

Number of words: 607

Option A: The Catholic church firmly opposed the legalisation of abortion. In subsequent years, Protestant and Catholic churches in Northern Ireland quietly co-operated to oppose moves to update the law, with the late Ian Paisley, founder of both the Free Presbyterian church and the Democratic Unionist Party (DUP), leading the way. But choice A has not been mentioned as a specific reason for the politicians in Belfast to not talk openly about the exodus of Northern Irish women to England to terminate pregnancies.
Option B: Although this exodus was no secret, it was generally mentioned in whispers. “She got the boat,” was the phrase often used. Awareness of this situation in the rest of the UK was limited. Hence choice B is the likely answer.
Option C: Thousands of Northern Irish women have ended up travelling to England to terminate pregnancies. In one recent 14-year period the numbers crossing the Irish Sea exceeded 800 every year. Although this exodus was no secret, it was generally mentioned in whispers. The number already exceeded 800 every year. So “would lead to a rise in the number of people leaving the region” as given in choice C does not arise.
Option D: Politicians in Belfast preferred not to broadcast the arrangement, which women’s groups and other campaigners increasingly denounced as the exporting of misery. Choice D includes two separate incidents, one is not the cause for the other. Choice D cannot answer the question. Choice (B)

undefined

DIRECTIONS *for questions 11 to 16:* The passage given below is accompanied by a set of six questions. Choose the best

answer to each question.

Abortion is expected to become legal in Ireland later this year, following the unexpectedly decisive result of a referendum on the topic on May 25th. Irish voters chose by a 66:34 majority to repeal a constitutional amendment restricting abortion. As a result, attention is now turning to the situation in Northern Ireland, where abortion remains illegal unless the risk to the mother's health is severe. The region has resolutely declined to adopt the more liberal approach to abortion seen in the rest of the United Kingdom.

The Abortion Act was passed in the United Kingdom in 1967, allowing doctors to perform abortions so long as certain conditions had been met. But the law in Northern Ireland was not changed, and remained as it had since Victorian times. The region's devolved legislature was dominated by the Ulster Unionist Party, which in an unusual alliance with the Catholic church firmly opposed the legalisation of abortion. In subsequent years, Protestant and Catholic churches in Northern Ireland quietly co-operated to oppose moves to update the law, with the late Ian Paisley, founder of both the Free Presbyterian church and the Democratic Unionist Party (DUP), leading the way. As a result thousands of Northern Irish women have ended up travelling to England to terminate pregnancies. In one recent 14-year period the numbers crossing the Irish Sea exceeded 800 every year. Although this exodus was no secret, it was generally mentioned in whispers. "She got the boat," was the phrase often used. Awareness of this situation in the rest of the UK was limited. Politicians in Belfast preferred not to broadcast the arrangement, which women's groups and other campaigners increasingly denounced as the exporting of misery.

When the Northern Ireland Assembly came into being in 1998, its powers included the right to legislate on abortion. In the last few years it has seen a number of debates on the subject, in an effort to introduce a new law. But the DUP has always had the votes to defeat all pro-abortion motions. The party has a powerful fundamentalist Protestant element in its ranks and especially within its leadership. Opinion polls indicate, however, that the views of the party's supporters are more liberal. And in the aftermath of the Irish referendum result, the clamour for change is likely to grow. Indeed, across the Irish Sea, pressure to support liberalisation in Northern Ireland has been building within the major Westminster-based parties. Penny Mordaunt, minister for women and equality, described the result as "a historic and great day for Ireland and a hopeful one for Northern Ireland." An education minister, Anne Milton, and the former equality minister, Justine Greening, also voiced their support.

The DUP leader, Arlene Foster, was quick to say that the Dublin result "has no impact" on the law in Northern Ireland. She said she disapproved of activists in the Republic "taking to the streets in celebration." Although support for reform appears to be growing at Westminster, a complication for Theresa May is the leverage that Mrs Foster and her party have over the Tory administration. In return for additional spending in Northern Ireland the DUP's ten MPs provide valuable support for Mrs May in Brexit votes. Both the government and the DUP are anxious to avoid a rift which might disturb this relationship. One possible outcome, given the continuing suspension of the Northern Ireland Assembly, is that the Westminster government will indeed legislate on the matter. This could allow the DUP to register its fierce opposition to anything which could lead to the introduction of abortion, and vote against any relevant bill at Westminster, while not, in all likelihood, affecting the overall result.

Q14. Which of the following, if true, weakens the author's statement that "... the clamour for change is likely to grow" (para 3)?

a) **There is pressure on Northern Ireland from the rest of the world to adopt a liberal approach to abortion.**

Your answer is incorrect

b) **The number of women's campaigns denouncing the legislation against abortion in Northern Ireland is significantly increasing.**

c) **The majority of the people in Northern Ireland still have a conservative perspective on abortion and are against the practice.**

d) **The people of Northern Ireland are becoming increasingly disillusioned with the archaic nature of the laws in Northern Ireland.**

Show Correct Answer

Time spent / Accuracy Analysis

Time taken by you to answer this question	**172**
Avg. time spent on this question by all students	**135**
Difficulty Level	**D**
Avg. time spent on this question by students who got this question right	**124**
% of students who attempted this question	**48.74**
% of students who got the question right of those who attempted	**59.95**

Video Solution

Text Solution

Number of words and Explanatory notes for RC:

Number of words: 607

The DUP has always had the votes to defeat all pro-abortion motions. The party has a powerful fundamentalist Protestant element in its ranks and especially within its leadership. Opinion polls indicate, however, that the views of the party's supporters are more liberal. And in the aftermath of the Irish referendum result, the clamour for change is likely to grow.
Option A: Uptil now, Northern Ireland has resolutely declined to adopt the more liberal approach to abortion seen in the rest of the United Kingdom. If there is pressure on Northern Ireland from the rest of the world to adopt a liberal approach to abortion, then it would strengthen the author's statement that "... the clamour for change is likely to grow". Choice A is not the answer.
Option B: When the Northern Ireland Assembly came into being in 1998 its powers included the right to legislate on abortion. In the last few years it has seen a number of debates on the subject, in an effort to introduce a new law. So, if choice B is true then again it would strengthen the author's statement that "... the clamour for change is likely to grow". Choice B does not weaken the author's statement.
Option C: If the majority of the people in Northern Ireland still have a conservative perspective on abortion and are against the practice, then they would not adopt the more liberal approach to abortion seen in the rest of the United Kingdom. Choice C weakens the author's statement given in the question and is the answer.
Option D: If people are becoming disillusioned with the archaic nature of the laws in Northern Ireland, then this would strengthen the statement "The clamour for change is likely to grow". Choice D strengthen the author's statement and is not the answer.

Choice (C)

undefined

DIRECTIONS *for questions 11 to 16:* The passage given below is accompanied by a set of six questions. Choose the best answer to each question.

Abortion is expected to become legal in Ireland later this year, following the unexpectedly decisive result of a referendum on the topic on May 25th. Irish voters chose by a 66:34 majority to repeal a constitutional amendment restricting abortion. As a result, attention is now turning to the situation in Northern Ireland, where abortion remains illegal unless the risk to the mother's health is severe. The region has resolutely declined to adopt the more liberal approach to abortion seen in the rest of the United Kingdom.

The Abortion Act was passed in the United Kingdom in 1967, allowing doctors to perform abortions so long as certain conditions had been met. But the law in Northern Ireland was not changed, and remained as it had since Victorian times. The region's devolved legislature was dominated by the Ulster Unionist Party, which in an unusual alliance with the Catholic church firmly opposed the legalisation of abortion. In subsequent years, Protestant and Catholic churches in Northern Ireland quietly co-operated to oppose moves to update the law, with the late Ian Paisley, founder of both the Free Presbyterian church and the Democratic Unionist Party (DUP), leading the way. As a result thousands of Northern Irish women have ended up travelling to England to terminate pregnancies. In one recent 14-year period the numbers crossing the Irish Sea exceeded 800 every year. Although this exodus was no secret, it was generally mentioned in whispers. "She got the boat," was the phrase often used. Awareness of this situation in the rest of the UK was limited. Politicians in Belfast preferred not to broadcast the arrangement, which women's groups and other campaigners increasingly denounced as the exporting of misery.

When the Northern Ireland Assembly came into being in 1998, its powers included the right to legislate on abortion. In the last few years it has seen a number of debates on the subject, in an effort to introduce a new law. But the DUP has always had the votes to defeat all pro-abortion motions. The party has a powerful fundamentalist Protestant element in its ranks and especially within its leadership. Opinion polls indicate, however, that the views of the party's supporters are more liberal. And in the aftermath of the Irish referendum result, the clamour for change is likely to grow. Indeed, across the Irish Sea, pressure to support liberalisation in Northern Ireland has been building within the major Westminster-based parties. Penny Mordaunt, minister for women and equality, described the result as "a historic and great day for Ireland and a hopeful one for Northern Ireland." An education minister, Anne Milton, and the former equality minister, Justine Greening, also voiced their support.

The DUP leader, Arlene Foster, was quick to say that the Dublin result "has no impact" on the law in Northern Ireland. She

said she disapproved of activists in the Republic “taking to the streets in celebration.” Although support for reform appears to be growing at Westminster, a complication for Theresa May is the leverage that Mrs Foster and her party have over the Tory administration. In return for additional spending in Northern Ireland the DUP’s ten MPs provide valuable support for Mrs May in Brexit votes. Both the government and the DUP are anxious to avoid a rift which might disturb this relationship. One possible outcome, given the continuing suspension of the Northern Ireland Assembly, is that the Westminster government will indeed legislate on the matter. This could allow the DUP to register its fierce opposition to anything which could lead to the introduction of abortion, and vote against any relevant bill at Westminster, while not, in all likelihood, affecting the overall result.

Q15. Which of the following statements about the DUP cannot be inferred from the passage?

i. The DUP had the support of the Protestant and Catholic churches in opposing legislative changes to the Abortion Act.

ii. Unlike in the case of abortion, the DUP is fairly liberal regarding other serious issues in the Northern Ireland region.

iii. DUP’s opposition to legislative changes in the Abortion Act was the only reason for the exodus of women of Northern Ireland to England.

- a) **Only ii and iii** **Your answer is correct**
- b) **Only i and ii**
- c) **Only i and iii**
- d) **Only i, ii and iii**

Time spent / Accuracy Analysis

Time taken by you to answer this question	**217**
Avg. time spent on this question by all students	**125**
Difficulty Level	**D**
Avg. time spent on this question by students who got this question right	**119**
% of students who attempted this question	**46**
% of students who got the question right of those who attempted	**51.95**

Video Solution

Text Solution

Number of words and Explanatory notes for RC:

Number of words: 607

Statement (i): In subsequent years, Protestant and Catholic churches in Northern Ireland quietly co-operated to oppose moves to update the law, with the late Ian Paisley, founder of both the Free Presbyterian church and the Democratic Unionist Party (DUP), leading the way. ..... When the Northern Ireland Assembly came into being in 1998, its powers included the right to legislate on abortion. In the last few years it has seen a number of debates on the subject, in an effort to introduce a new law. But the DUP has always had the votes to defeat all pro-abortion motions. The party has a powerful fundamentalist Protestant element in its ranks and especially within its leadership. So statement (i) is true and is not the answer.
Statement (ii): “other serious issues in the Northern Ireland region” is out of scope of the discussion in the passage. (ii) cannot be inferred.
Statement (iii): As a result thousands of Northern Irish women have ended up travelling to England to terminate pregnancies. But the word 'only' in statement (iii) makes it narrow and extreme. (iii) cannot be inferred.
So (ii) and (iii) cannot be inferred. Choice (A)

undefined

DIRECTIONS *for questions 11 to 16:* The passage given below is accompanied by a set of six questions. Choose the best answer to each question.

Abortion is expected to become legal in Ireland later this year, following the unexpectedly decisive result of a referendum on the topic on May 25th. Irish voters chose by a 66:34 majority to repeal a constitutional amendment restricting abortion. As a result, attention is now turning to the situation in Northern Ireland, where abortion remains illegal unless the risk to the mother's health is severe. The region has resolutely declined to adopt the more liberal approach to abortion seen in the rest of the United Kingdom.

The Abortion Act was passed in the United Kingdom in 1967, allowing doctors to perform abortions so long as certain conditions had been met. But the law in Northern Ireland was not changed, and remained as it had since Victorian times. The region's devolved legislature was dominated by the Ulster Unionist Party, which in an unusual alliance with the Catholic church firmly opposed the legalisation of abortion. In subsequent years, Protestant and Catholic churches in Northern Ireland quietly co-operated to oppose moves to update the law, with the late Ian Paisley, founder of both the Free Presbyterian church and the Democratic Unionist Party (DUP), leading the way. As a result thousands of Northern Irish women have ended up travelling to England to terminate pregnancies. In one recent 14-year period the numbers crossing the Irish Sea exceeded 800 every year. Although this exodus was no secret, it was generally mentioned in whispers. "She got the boat," was the phrase often used. Awareness of this situation in the rest of the UK was limited. Politicians in Belfast preferred not to broadcast the arrangement, which women's groups and other campaigners increasingly denounced as the exporting of misery.

When the Northern Ireland Assembly came into being in 1998, its powers included the right to legislate on abortion. In the last few years it has seen a number of debates on the subject, in an effort to introduce a new law. But the DUP has always had the votes to defeat all pro-abortion motions. The party has a powerful fundamentalist Protestant element in its ranks and especially within its leadership. Opinion polls indicate, however, that the views of the party's supporters are more liberal. And in the aftermath of the Irish referendum result, the clamour for change is likely to grow. Indeed, across the Irish Sea, pressure to support liberalisation in Northern Ireland has been building within the major Westminster-based parties. Penny Mordaunt, minister for women and equality, described the result as "a historic and great day for Ireland and a hopeful one for Northern Ireland." An education minister, Anne Milton, and the former equality minister, Justine Greening, also voiced their support.

The DUP leader, Arlene Foster, was quick to say that the Dublin result "has no impact" on the law in Northern Ireland. She said she disapproved of activists in the Republic "taking to the streets in celebration." Although support for reform appears to be growing at Westminster, a complication for Theresa May is the leverage that Mrs Foster and her party have over the Tory administration. In return for additional spending in Northern Ireland the DUP's ten MPs provide valuable support for Mrs May in Brexit votes. Both the government and the DUP are anxious to avoid a rift which might disturb this relationship. One possible outcome, given the continuing suspension of the Northern Ireland Assembly, is that the Westminster government will indeed legislate on the matter. This could allow the DUP to register its fierce opposition to anything which could lead to the introduction of abortion, and vote against any relevant bill at Westminster, while not, in all likelihood, affecting the overall result.

Q16. The author is most likely to agree with which of the following statements?

a) **Abortion should be allowed in Northern Ireland because many women in the region are facing the brunt of the conservative legislation on abortion.**

b) **Abortion should not be allowed in Northern Ireland because a liberal approach to abortion might disturb the sanctity of the region.**

c) **Legalising abortion might still not bring down the exodus of Northern Ireland women to England.**

d) **The DUP could pose as a party that is going down fighting, while keeping its deal with the Tories in place.**

Your answer is correct

Time spent / Accuracy Analysis

Time taken by you to answer this question	**647**
Avg. time spent on this question by all students	**91**
Difficulty Level	**D**
Avg. time spent on this question by students who got this question right	**119**

Time spent / Accuracy Analysis

% of students who attempted this question	**45.68**
% of students who got the question right of those who attempted	**24.69**

Video Solution

Text Solution

Number of words and Explanatory notes for RC:

Number of words: 607

Option A: The author says that abortion is expected to become legal in Ireland later this year... However, his tone is neutral and unbiased. Hence "Abortion should be allowed in Northern Ireland" is quite persuasive. Choice A is not the answer.
Option B: As explained for choice A, we cannot infer that the author subscribes to the view that abortion should not be allowed in Northern Ireland. The remaining segment of choice B cannot be deduced from the para. So choice B is not the answer.
Option C: In subsequent years, Protestant and Catholic churches in Northern Ireland quietly co-operated to oppose moves to update the law, with the late Ian Paisley, founder of both the Free Presbyterian church and the Democratic Unionist Party (DUP), leading the way. As a result thousands of Northern Irish women have ended up travelling to England to terminate pregnancies. But choice C is farfetched and out of scope.
Option D: The Dublin result "has no impact" on the law in Northern Ireland. The DUP leader, Arlene Foster, has leverage over the Tory administration. .... One possible outcome, given the continuing suspension of the Northern Ireland Assembly, is that the Westminster government will indeed legislate on the matter. This could allow the DUP to register its fierce opposition to anything which could lead to the introduction of abortion, and vote against any relevant bill at Westminster, while not, in all likelihood, affecting the overall result. Choice D can be inferred to be true. Option (D)

undefined

DIRECTIONS *for questions 17 to 22:* The passage given below is accompanied by a set of six questions. Choose the best answer to each question.

How could the death of one man, Archduke Franz Ferdinand, who was assassinated on 28 June 1914, lead to the deaths of millions in a war of unprecedented scale and ferocity? This is the question at the heart of the debate on the origins of the First World War.

The governments of Great Britain, France, Russia, Germany, and Austria-Hungary tried desperately to ensure that they did not appear to be the aggressor in July and August 1914. This was crucial because the vast armies of soldiers that would be needed to fight this war could not be summoned for a war of aggression. Socialists, of whom there were many millions by 1914, would not have supported a belligerent foreign policy, and could only be relied upon to fight in a defensive war. Populations would only rally and make sacrifices willingly if the cause was just - and that meant fighting a defensive war.

The French and Belgians, Russians, Serbs and British were convinced they were indeed involved in a defensive struggle for just aims. Austrians and Hungarians were fighting to revenge the death of Franz Ferdinand. Germans were assured by their Kaiser, Wilhelm II, and their Chancellor that Germany's neighbours had 'forced the sword' into its hands. In 1914, Germans were certain that they had not started the war. But if not they (who had after all invaded Belgium and France in the first few weeks of fighting), then who had caused this war?

For the victors, this was an easy question to answer, and they agreed at the peace conference at Paris in 1919 that Germany and its allies had been responsible for causing the Great War. Based on this decision, which was embodied in Article 231 of the Treaty of Versailles, vast reparations would be payable. This so-called 'war guilt ruling' set the tone for the long debate that followed on the causes of the war. From 1919 onwards, governments and historians engaged with this question as revisionists (who wanted to revise the verdict of Versailles) clashed with anti-revisionists who agreed with the victors' assessment. Sponsored by post-war governments and with access to vast amounts of documents, revisionist historians set about proving that the victors at Versailles had been wrong. Arguments were advanced which highlighted Russia's and France's responsibility for the outbreak of the war, for example, or which stressed that Britain could have played a more active role in preventing the escalation of the July Crisis.

In the interwar years, such views influenced a newly developing consensus that no longer foregrounded Germany's war

guilt, but instead identified a failure in the alliance system before 1914. The war had not been deliberately unleashed, but Europe had somehow 'slithered over the brink into the boiling cauldron of war', as David Lloyd George famously put it. With such a conciliatory accident theory, Germany was off the hook.

The first major challenge to this interpretation was advanced in Germany in the 1960s, where the historian Fritz Fischer published a startling new thesis on the origins of the war which threatened to overthrow the existing consensus. Germany, he argued, bore the main share of responsibility for the outbreak of the war. Moreover, its leaders had deliberately unleashed the war in pursuit of aggressive foreign policy aims which were startlingly similar to those pursued by Hitler in 1939…

After 100 years of debate, every conceivable interpretation seems to have been advanced. In some of the most recent publications, even seeking to attribute responsibility, as had so confidently been done at Versailles, is now eschewed. Is it really the historian's role to blame the actors of the past, or merely to understand how the war could have occurred? Such doubts did not trouble those who sought to attribute war guilt in 1919 and during much of this long debate, but this question will need to be asked as the controversy continues past the centenary. The current consensus on why it broke out is 'that there is no consensus'. After 100 years of arguing about the war's causes, this long debate is set to continue.

Q17. The main theme of this passage is:

- a) **Investigating the real cause behind World War I**
- b) **Demonstrating the fluid nature of the consensus on what led to World War I**
- c) **Debunking the myths related to the real cause of World War I**
- d) **Explaining the situation that led to World War I**

You did not answer this question Show Correct Answer

Time spent / Accuracy Analysis

Time taken by you to answer this question	**20**
Avg. time spent on this question by all students	**323**
Difficulty Level	**E**
Avg. time spent on this question by students who got this question right	**336**
% of students who attempted this question	**45.58**
% of students who got the question right of those who attempted	**47.91**

Video Solution

Text Solution

Number of words and Explanatory notes for RC:

Number of words: 679

The author in the passage explores the following themes: 1. The various theories presented in the last 100 years to attribute the blame of causing the outbreak of the war. 2. How the theories have been modified and challenged as time passed by. 3. How we have not come to a consensus as far as finding the real culprit is concerned.
Option A: If this were the main theme of the passage, the author would have played historian and presented us with more facts and analysis to get to the root. Instead, the passage was more about what were offered by reasons by various parties for the breakout of the war. The author has never tried to examine the authenticity of the claims of various countries or debate them, showing that the focus of the passage was not to find who was right or wrong, just to report that indecision. Hence, choice A is not the answer.
Option B: The passage starts with 'This (How did one assassination lead to a war) is the question at the heart of the debate on the origins of the First World War' and ends with 'After 100 years of arguing about the war's causes, this long debate is set to continue'. In the paras in between, the author presents how different versions of the consensus came about. Hence, we can safely say that the author was demonstrating the fluid nature of consensus as far as finding out who was really responsible for the war. Hence, choice B is the answer.
Option C: The word 'debunking' is used when someone falsifies and established theory. The author doesn't falsify any of the theories, merely reports the various theories. Also, the word 'myth' is not justified in this passage since it is more a traditionally held belief that may not be real. The reasons and theories about the war were less myths and more debates that changed shape over a century. So, choice C is not the answer.
Option D: This is the closest option. However, while the author does tell us about some of the probable reasons for the outbreak of World War I, the author doesn't 'explain' the situation that led to the war. This is not possible since, the real reason for the outbreak of war has still not been established. Hence, choice D is incorrect.

Choice (B)

undefined

DIRECTIONS *for questions 17 to 22:* The passage given below is accompanied by a set of six questions. Choose the best answer to each question.

How could the death of one man, Archduke Franz Ferdinand, who was assassinated on 28 June 1914, lead to the deaths of millions in a war of unprecedented scale and ferocity? This is the question at the heart of the debate on the origins of the

First World War.

The governments of Great Britain, France, Russia, Germany, and Austria-Hungary tried desperately to ensure that they did not appear to be the aggressor in July and August 1914. This was crucial because the vast armies of soldiers that would be needed to fight this war could not be summoned for a war of aggression. Socialists, of whom there were many millions by 1914, would not have supported a belligerent foreign policy, and could only be relied upon to fight in a defensive war. Populations would only rally and make sacrifices willingly if the cause was just - and that meant fighting a defensive war.

The French and Belgians, Russians, Serbs and British were convinced they were indeed involved in a defensive struggle for just aims. Austrians and Hungarians were fighting to revenge the death of Franz Ferdinand. Germans were assured by their Kaiser, Wilhelm II, and their Chancellor that Germany's neighbours had 'forced the sword' into its hands. In 1914, Germans were certain that they had not started the war. But if not they (who had after all invaded Belgium and France in the first few weeks of fighting), then who had caused this war?

For the victors, this was an easy question to answer, and they agreed at the peace conference at Paris in 1919 that Germany and its allies had been responsible for causing the Great War. Based on this decision, which was embodied in Article 231 of the Treaty of Versailles, vast reparations would be payable. This so-called 'war guilt ruling' set the tone for the long debate that followed on the causes of the war. From 1919 onwards, governments and historians engaged with this question as revisionists (who wanted to revise the verdict of Versailles) clashed with anti-revisionists who agreed with the victors' assessment. Sponsored by post-war governments and with access to vast amounts of documents, revisionist historians set about proving that the victors at Versailles had been wrong. Arguments were advanced which highlighted Russia's and France's responsibility for the outbreak of the war, for example, or which stressed that Britain could have played a more active role in preventing the escalation of the July Crisis.

In the interwar years, such views influenced a newly developing consensus that no longer foregrounded Germany's war guilt, but instead identified a failure in the alliance system before 1914. The war had not been deliberately unleashed, but Europe had somehow 'slithered over the brink into the boiling cauldron of war', as David Lloyd George famously put it. With such a conciliatory accident theory, Germany was off the hook.

The first major challenge to this interpretation was advanced in Germany in the 1960s, where the historian Fritz Fischer published a startling new thesis on the origins of the war which threatened to overthrow the existing consensus. Germany, he argued, bore the main share of responsibility for the outbreak of the war. Moreover, its leaders had deliberately unleashed the war in pursuit of aggressive foreign policy aims which were startlingly similar to those pursued by Hitler in 1939…

After 100 years of debate, every conceivable interpretation seems to have been advanced. In some of the most recent publications, even seeking to attribute responsibility, as had so confidently been done at Versailles, is now eschewed. Is it really the historian's role to blame the actors of the past, or merely to understand how the war could have occurred? Such doubts did not trouble those who sought to attribute war guilt in 1919 and during much of this long debate, but this question will need to be asked as the controversy continues past the centenary. The current consensus on why it broke out is 'that there is no consensus'. After 100 years of arguing about the war's causes, this long debate is set to continue.

Q18. Which of the following is the most accurate summary of the last para of the passage?

a) **Even 100 years of debate has not been sufficient for pundits to come to a conclusion or consensus on who was responsible for starting the war.**

b) **While it isn't up to the historians to blame the actors of the past, the former must put doubts to rest and come to a consensus on why the war broke out.**

c) **While all options, including giving up blaming one party, have been considered, the absence of consensus on why the war broke out can be resolved if one can answer whether the historian's role is to blame the actors of the past, or to comprehend why the war had occurred.**

d) **Since no consensus on why the war broke out has been established even after 100 years of the ongoing debate, despite considering every possible scenario, it is imperative that the question, about whether the historian's role is to blame the actors of the past or understand how the war came about, be asked.**

You did not answer this question Show Correct Answer

Time spent / Accuracy Analysis

Time taken by you to answer this question	**0**
Avg. time spent on this question by all students	**141**
Difficulty Level	**D**
Avg. time spent on this question by students who got this question right	**140**
% of students who attempted this question	**43.09**
% of students who got the question right of those who attempted	**70.13**

Time spent / Accuracy Analysis

Video Solution

Text Solution

Number of words and Explanatory notes for RC:

Number of words: 679

The sub-ideas in the passage are: 1. The ongoing debate has not been resolved and we still don't have a consensus 2. All possible interpretations have been considered 3. The question on whether it is the historian's role to blame the past actors or understand the events leading up to war should be asked to come to a consensus.
Option A: Only the first sub-idea has been mentioned. Hence, it is incorrect.
Option B: Only the third sub-idea is being discussed. Even that is wrongly interpreted, as the historians don't have to come to a consensus. Their role is to be established first of all. Hence, choice B is incorrect.
Option C: This option mentions all three ideas but the third sub-idea has been misrepresented. The question only needs to be considered, and need not be answered. Hence, 'if one can *answer* whether the historian's role is to blame' is incorrect. Choice C is not the answer.
Option D: All the sub-ideas have been mentioned and well-represented. The part 'no consensus on why the war broke out has been established even after 100 years of the *ongoing debate'* represents the first sub-idea. The part 'despite considering every possible scenario' represents 'every conceivable interpretation seems to have been advanced'. The third sub-idea is represented by '*it is imperative that the question*, about whether the historian's role is to blame the actors of the past or understand how the war came about, *be asked*' Hence, this is the answer. Choice (D)

undefined

DIRECTIONS *for questions 17 to 22:* The passage given below is accompanied by a set of six questions. Choose the best answer to each question.

How could the death of one man, Archduke Franz Ferdinand, who was assassinated on 28 June 1914, lead to the deaths of millions in a war of unprecedented scale and ferocity? This is the question at the heart of the debate on the origins of the First World War.

The governments of Great Britain, France, Russia, Germany, and Austria-Hungary tried desperately to ensure that they did not appear to be the aggressor in July and August 1914. This was crucial because the vast armies of soldiers that would be needed to fight this war could not be summoned for a war of aggression. Socialists, of whom there were many millions by 1914, would not have supported a belligerent foreign policy, and could only be relied upon to fight in a defensive war. Populations would only rally and make sacrifices willingly if the cause was just - and that meant fighting a defensive war.

The French and Belgians, Russians, Serbs and British were convinced they were indeed involved in a defensive struggle for just aims. Austrians and Hungarians were fighting to revenge the death of Franz Ferdinand. Germans were assured by their Kaiser, Wilhelm II, and their Chancellor that Germany's neighbours had 'forced the sword' into its hands. In 1914, Germans were certain that they had not started the war. But if not they (who had after all invaded Belgium and France in the first few weeks of fighting), then who had caused this war?

For the victors, this was an easy question to answer, and they agreed at the peace conference at Paris in 1919 that Germany and its allies had been responsible for causing the Great War. Based on this decision, which was embodied in Article 231 of the Treaty of Versailles, vast reparations would be payable. This so-called 'war guilt ruling' set the tone for the long debate that followed on the causes of the war. From 1919 onwards, governments and historians engaged with this question as revisionists (who wanted to revise the verdict of Versailles) clashed with anti-revisionists who agreed with the victors' assessment. Sponsored by post-war governments and with access to vast amounts of documents, revisionist historians set about proving that the victors at Versailles had been wrong. Arguments were advanced which highlighted Russia's and France's responsibility for the outbreak of the war, for example, or which stressed that Britain could have played a more active role in preventing the escalation of the July Crisis.

In the interwar years, such views influenced a newly developing consensus that no longer foregrounded Germany's war guilt, but instead identified a failure in the alliance system before 1914. The war had not been deliberately unleashed, but

Europe had somehow ‘slithered over the brink into the boiling cauldron of war’, as David Lloyd George famously put it. With such a conciliatory accident theory, Germany was off the hook.

The first major challenge to this interpretation was advanced in Germany in the 1960s, where the historian Fritz Fischer published a startling new thesis on the origins of the war which threatened to overthrow the existing consensus. Germany, he argued, bore the main share of responsibility for the outbreak of the war. Moreover, its leaders had deliberately unleashed the war in pursuit of aggressive foreign policy aims which were startlingly similar to those pursued by Hitler in 1939…

After 100 years of debate, every conceivable interpretation seems to have been advanced. In some of the most recent publications, even seeking to attribute responsibility, as had so confidently been done at Versailles, is now eschewed. Is it really the historian’s role to blame the actors of the past, or merely to understand how the war could have occurred? Such doubts did not trouble those who sought to attribute war guilt in 1919 and during much of this long debate, but this question will need to be asked as the controversy continues past the centenary. The current consensus on why it broke out is ‘that there is no consensus’. After 100 years of arguing about the war’s causes, this long debate is set to continue.

Q19. Which of the following is the best description of the tone of the penultimate sentence of the passage: The current consensus on why it broke out is ‘that there is no consensus’?

- a) **Anticipative**
- b) **Regretful**
- c) **Contentious**
- d) **Ironic**

You did not answer this question Show Correct Answer

Time spent / Accuracy Analysis

Time taken by you to answer this question	**0**
Avg. time spent on this question by all students	**51**
Difficulty Level	**M**
Avg. time spent on this question by students who got this question right	**44**
% of students who attempted this question	**38.44**
% of students who got the question right of those who attempted	**63.17**

Video Solution

Text Solution

Number of words and Explanatory notes for RC:

Number of words: 679

Option A: The author is not waiting with bated breath/anxiously predicting something to happen. Therefore, the tone is not anticipative.
Option B: The author is not feeling guilty/penitent/sad/remorseful about the past. Therefore, the tone is not regretful.
Option C: The author isn’t making any debatable or controversial statements. He isn’t making any arguments against any particular perspectives. Therefore, the tone is not contentious.
Option D: The tone is said to be ironical when there is an apparent incongruity between the expected results and the actual results. The indicator is the use of words expressing something which is the opposite of the literal meaning. The ‘current consensus’ is that ‘there is no consensus’ – the only thing that can be agreed upon is that no common understanding/view has been arrived at-two opposite expressions leading to ‘irony’. ‘Irony’ best describes the tone. Choice D is the answer.

Choice (D)

undefined

DIRECTIONS *for questions 17 to 22:* The passage given below is accompanied by a set of six questions. Choose the best answer to each question.

How could the death of one man, Archduke Franz Ferdinand, who was assassinated on 28 June 1914, lead to the deaths of millions in a war of unprecedented scale and ferocity? This is the question at the heart of the debate on the origins of the First World War.

The governments of Great Britain, France, Russia, Germany, and Austria-Hungary tried desperately to ensure that they did not appear to be the aggressor in July and August 1914. This was crucial because the vast armies of soldiers that would be needed to fight this war could not be summoned for a war of aggression. Socialists, of whom there were many millions by 1914, would not have supported a belligerent foreign policy, and could only be relied upon to fight in a defensive war. Populations would only rally and make sacrifices willingly if the cause was just - and that meant fighting a defensive war.

The French and Belgians, Russians, Serbs and British were convinced they were indeed involved in a defensive struggle for just aims. Austrians and Hungarians were fighting to revenge the death of Franz Ferdinand. Germans were assured by their Kaiser, Wilhelm II, and their Chancellor that Germany's neighbours had 'forced the sword' into its hands. In 1914, Germans were certain that they had not started the war. But if not they (who had after all invaded Belgium and France in the first few weeks of fighting), then who had caused this war?

For the victors, this was an easy question to answer, and they agreed at the peace conference at Paris in 1919 that Germany and its allies had been responsible for causing the Great War. Based on this decision, which was embodied in Article 231 of the Treaty of Versailles, vast reparations would be payable. This so-called 'war guilt ruling' set the tone for the long debate that followed on the causes of the war. From 1919 onwards, governments and historians engaged with this question as revisionists (who wanted to revise the verdict of Versailles) clashed with anti-revisionists who agreed with the victors' assessment. Sponsored by post-war governments and with access to vast amounts of documents, revisionist historians set about proving that the victors at Versailles had been wrong. Arguments were advanced which highlighted Russia's and France's responsibility for the outbreak of the war, for example, or which stressed that Britain could have played a more active role in preventing the escalation of the July Crisis.

In the interwar years, such views influenced a newly developing consensus that no longer foregrounded Germany's war guilt, but instead identified a failure in the alliance system before 1914. The war had not been deliberately unleashed, but Europe had somehow 'slithered over the brink into the boiling cauldron of war', as David Lloyd George famously put it. With such a conciliatory accident theory, Germany was off the hook.

The first major challenge to this interpretation was advanced in Germany in the 1960s, where the historian Fritz Fischer published a startling new thesis on the origins of the war which threatened to overthrow the existing consensus. Germany, he argued, bore the main share of responsibility for the outbreak of the war. Moreover, its leaders had deliberately unleashed the war in pursuit of aggressive foreign policy aims which were startlingly similar to those pursued by Hitler in 1939…

After 100 years of debate, every conceivable interpretation seems to have been advanced. In some of the most recent publications, even seeking to attribute responsibility, as had so confidently been done at Versailles, is now eschewed. Is it really the historian's role to blame the actors of the past, or merely to understand how the war could have occurred? Such doubts did not trouble those who sought to attribute war guilt in 1919 and during much of this long debate, but this question will need to be asked as the controversy continues past the centenary. The current consensus on why it broke out is 'that there is no consensus'. After 100 years of arguing about the war's causes, this long debate is set to continue.

Q20. Which of the following most reasonably explains the 'conciliatory accident theory' mentioned in the fifth paragraph of the passage?

- a) **It was the failure of the alliance before 1914 which led to the unintended outbreak of war.**
- b) **The responsibility of causing the war cannot be attributed to Germany as it was Britain which didn't take an active role in preventing the war even when it could.**
- c) **Russia and France were just as responsible for the outbreak of the war as Germany was, if not more.**
- d) **Germans were assured by their Kaiser, Wilhelm II, and their Chancellor that Germany's neighbours had 'forced the sword' into its hands.**

You did not answer this question Show Correct Answer

Time spent / Accuracy Analysis

Time taken by you to answer this question	**0**
Avg. time spent on this question by all students	**130**
Difficulty Level	**E**

Time spent / Accuracy Analysis

Avg. time spent on this question by students who got this question right	**123**
% of students who attempted this question	**37.03**
% of students who got the question right of those who attempted	**65.8**

Video Solution

Text Solution

Number of words and Explanatory notes for RC:

Number of words: 679

'In the interwar years, *such views* influenced a *newly developing consensus* that no longer foregrounded Germany's war guilt, but instead identified *a failure in the alliance system before 1914*. The war had *not been deliberately unleashed*, but Europe had somehow 'slithered over the brink into the boiling cauldron of war', as David Lloyd George famously put it. With such a conciliatory accident theory, Germany was off the hook.' In the above lines, '*such views*' refers to theories like 'Arguments were advanced which highlighted Russia's and France's responsibility for the outbreak of the war, for example, or which stressed that Britain could have played a more active role in preventing the escalation of the July Crisis'. In other words, the blame was being spread around instead of holding Germany responsible for the war. Hence, the use of the word 'conciliatory'.

Option A: This line attributes a little bit of the blame on everyone. The line also precedes the conclusion that Europe had slithered over the brink and war was not deliberately unleashed by any one party involved. Hence, this is the line that represents the conciliatory theory that exonerates Germany and lets it off the hook. Choice A is the answer.

Option B: While the first half of the option about Germany not being responsible is not entirely untrue, the second half of the option will help in ruling out this option. Germany was exculpated not because the blame was transferred entirely to Britain. Also, Britain being in a position to prevent the war doesn't necessarily indict it completely. It only makes Britain one of the guilty parties. Hence, choice B is incorrect.

Option C: This line equates the guilt equation between the three countries – Russia, France and Germany, which is once again a misrepresentation of information. While it is partly in favour of Germany (blaming other countries as well instead of squarely blaming just Germany), it is not the conciliation referred to in the passage. Therefore, choice C is not the answer.

Option D: This was not an after-war conclusion. Rather, this was an excuse used by the German rulers to get the support of their countrymen and not look like an aggressor. Hence, choice D is incorrect. Choice (A)

undefined

DIRECTIONS *for questions 17 to 22:* The passage given below is accompanied by a set of six questions. Choose the best answer to each question.

How could the death of one man, Archduke Franz Ferdinand, who was assassinated on 28 June 1914, lead to the deaths of millions in a war of unprecedented scale and ferocity? This is the question at the heart of the debate on the origins of the First World War.

The governments of Great Britain, France, Russia, Germany, and Austria-Hungary tried desperately to ensure that they did not appear to be the aggressor in July and August 1914. This was crucial because the vast armies of soldiers that would be needed to fight this war could not be summoned for a war of aggression. Socialists, of whom there were many millions by 1914, would not have supported a belligerent foreign policy, and could only be relied upon to fight in a defensive war. Populations would only rally and make sacrifices willingly if the cause was just - and that meant fighting a defensive war.

The French and Belgians, Russians, Serbs and British were convinced they were indeed involved in a defensive struggle for just aims. Austrians and Hungarians were fighting to revenge the death of Franz Ferdinand. Germans were assured by their Kaiser, Wilhelm II, and their Chancellor that Germany's neighbours had 'forced the sword' into its hands. In 1914, Germans were certain that they had not started the war. But if not they (who had after all invaded Belgium and France in the first few weeks of fighting), then who had caused this war?

For the victors, this was an easy question to answer, and they agreed at the peace conference at Paris in 1919 that

Germany and its allies had been responsible for causing the Great War. Based on this decision, which was embodied in Article 231 of the Treaty of Versailles, vast reparations would be payable. This so-called 'war guilt ruling' set the tone for the long debate that followed on the causes of the war. From 1919 onwards, governments and historians engaged with this question as revisionists (who wanted to revise the verdict of Versailles) clashed with anti-revisionists who agreed with the victors' assessment. Sponsored by post-war governments and with access to vast amounts of documents, revisionist historians set about proving that the victors at Versailles had been wrong. Arguments were advanced which highlighted Russia's and France's responsibility for the outbreak of the war, for example, or which stressed that Britain could have played a more active role in preventing the escalation of the July Crisis.

In the interwar years, such views influenced a newly developing consensus that no longer foregrounded Germany's war guilt, but instead identified a failure in the alliance system before 1914. The war had not been deliberately unleashed, but Europe had somehow 'slithered over the brink into the boiling cauldron of war', as David Lloyd George famously put it. With such a conciliatory accident theory, Germany was off the hook.

The first major challenge to this interpretation was advanced in Germany in the 1960s, where the historian Fritz Fischer published a startling new thesis on the origins of the war which threatened to overthrow the existing consensus. Germany, he argued, bore the main share of responsibility for the outbreak of the war. Moreover, its leaders had deliberately unleashed the war in pursuit of aggressive foreign policy aims which were startlingly similar to those pursued by Hitler in 1939…

After 100 years of debate, every conceivable interpretation seems to have been advanced. In some of the most recent publications, even seeking to attribute responsibility, as had so confidently been done at Versailles, is now eschewed. Is it really the historian's role to blame the actors of the past, or merely to understand how the war could have occurred? Such doubts did not trouble those who sought to attribute war guilt in 1919 and during much of this long debate, but this question will need to be asked as the controversy continues past the centenary. The current consensus on why it broke out is 'that there is no consensus'. After 100 years of arguing about the war's causes, this long debate is set to continue.

Q21. Which of the following inferences about the responsibility for a war may not be drawn from the passage?

- a) **A defensive war is always seen as more ethical than an aggressive war.**
- b) **Not playing an active role in preventing an escalation is reason enough to inculpate a country.**
- c) **Avenging an assassination and thereby, starting a war, cannot be considered a just action.**
- d) **Unleashing a war to fuel aggressive foreign policy aims is uncalled for.**

You did not answer this question Show Correct Answer

Time spent / Accuracy Analysis

Time taken by you to answer this question	**5**
Avg. time spent on this question by all students	**93**
Difficulty Level	**M**
Avg. time spent on this question by students who got this question right	**99**
% of students who attempted this question	**27.46**
% of students who got the question right of those who attempted	**25.87**

Video Solution

Text Solution

Number of words and Explanatory notes for RC:

Number of words: 679

'The governments of Great Britain, France, Russia, Germany, and Austria-Hungary tried desperately *to ensure that they did not appear to be the aggressor* in July and August 1914. This was crucial because the *vast armies of soldiers that would be needed to fight this war could not be summoned for a war of aggression*. *Socialists*, of whom there were many millions by 1914, *would not have supported a belligerent foreign policy*, and could only be relied upon *to fight in a defensive war*. Populations would only rally and make sacrifices willingly if *the cause was just – and that meant fighting a defensive war*.' This para suggests that only a defensive war was considered ethical and hence garnered the support of people who were needed to actually fight the war.

Option A: This part of the line '*the cause was just – and that meant fighting a defensive war*' equates justness with a defensive war. Hence, choice A is an inference and hence not the answer.

Option B: This line at the end of the fourth para – 'or which stressed that Britain could have played a more active role in preventing the escalation of the July Crisis' clearly suggests that Britain could be held responsible as well for not trying to prevent the war. 'Inculpate' – to hold responsible or guilty for something wrong. Choice B can also be inferred and hence, it is not the answer.

Option C: 'Austrians and Hungarians were fighting to revenge the death of Franz Ferdinand'. This line clearly shows that Austrians and Hungarians were using revenge as an excuse for justifying their war (and no country wanted to look guilty of causing the outbreak of the war - *The governments of Great Britain, France, Russia, Germany, and Austria-Hungary tried desperately to ensure that they did not appear to be the aggressor)*. Choice C is not an inference, and therefore, it is the answer.

Option D: 'Moreover, its leaders had *deliberately unleashed* the war in pursuit of aggressive foreign policy aims which were startlingly similar to those pursued by Hitler in 1939…' – This line clearly suggests that an aggressive foreign policy is not desirable and could be held responsible for causing the war as accused by Fischer. Such a foreign policy is indeed uncalled for. Choice D can be inferred and hence, it is not the answer.

Choice (C)

undefined

DIRECTIONS *for questions 17 to 22:* The passage given below is accompanied by a set of six questions. Choose the best answer to each question.

How could the death of one man, Archduke Franz Ferdinand, who was assassinated on 28 June 1914, lead to the deaths of millions in a war of unprecedented scale and ferocity? This is the question at the heart of the debate on the origins of the First World War.

The governments of Great Britain, France, Russia, Germany, and Austria-Hungary tried desperately to ensure that they did not appear to be the aggressor in July and August 1914. This was crucial because the vast armies of soldiers that would be needed to fight this war could not be summoned for a war of aggression. Socialists, of whom there were many millions by 1914, would not have supported a belligerent foreign policy, and could only be relied upon to fight in a defensive war. Populations would only rally and make sacrifices willingly if the cause was just - and that meant fighting a defensive war.

The French and Belgians, Russians, Serbs and British were convinced they were indeed involved in a defensive struggle for

just aims. Austrians and Hungarians were fighting to revenge the death of Franz Ferdinand. Germans were assured by their Kaiser, Wilhelm II, and their Chancellor that Germany's neighbours had 'forced the sword' into its hands. In 1914, Germans were certain that they had not started the war. But if not they (who had after all invaded Belgium and France in the first few weeks of fighting), then who had caused this war?

For the victors, this was an easy question to answer, and they agreed at the peace conference at Paris in 1919 that Germany and its allies had been responsible for causing the Great War. Based on this decision, which was embodied in Article 231 of the Treaty of Versailles, vast reparations would be payable. This so-called 'war guilt ruling' set the tone for the long debate that followed on the causes of the war. From 1919 onwards, governments and historians engaged with this question as revisionists (who wanted to revise the verdict of Versailles) clashed with anti-revisionists who agreed with the victors' assessment. Sponsored by post-war governments and with access to vast amounts of documents, revisionist historians set about proving that the victors at Versailles had been wrong. Arguments were advanced which highlighted Russia's and France's responsibility for the outbreak of the war, for example, or which stressed that Britain could have played a more active role in preventing the escalation of the July Crisis.

In the interwar years, such views influenced a newly developing consensus that no longer foregrounded Germany's war guilt, but instead identified a failure in the alliance system before 1914. The war had not been deliberately unleashed, but Europe had somehow 'slithered over the brink into the boiling cauldron of war', as David Lloyd George famously put it. With such a conciliatory accident theory, Germany was off the hook.

The first major challenge to this interpretation was advanced in Germany in the 1960s, where the historian Fritz Fischer published a startling new thesis on the origins of the war which threatened to overthrow the existing consensus. Germany, he argued, bore the main share of responsibility for the outbreak of the war. Moreover, its leaders had deliberately unleashed the war in pursuit of aggressive foreign policy aims which were startlingly similar to those pursued by Hitler in 1939…

After 100 years of debate, every conceivable interpretation seems to have been advanced. In some of the most recent publications, even seeking to attribute responsibility, as had so confidently been done at Versailles, is now eschewed. Is it really the historian's role to blame the actors of the past, or merely to understand how the war could have occurred? Such doubts did not trouble those who sought to attribute war guilt in 1919 and during much of this long debate, but this question will need to be asked as the controversy continues past the centenary. The current consensus on why it broke out is 'that there is no consensus'. After 100 years of arguing about the war's causes, this long debate is set to continue.

Q22. All of the following statements taken in the context of the passage weaken the argument that Europe had somehow 'slithered over the brink into the boiling cauldron of war' EXCEPT?

a) **Britain could have played a more active role in preventing the escalation of the July Crisis.**

b) **Germany's leaders had deliberately unleashed the war in pursuit of aggressive foreign policy aims which were startlingly similar to those pursued by Hitler in 1939.**

c) **Germany invaded Belgium and France in the first few weeks of fighting.**

d) **Austrians and Hungarians were fighting to revenge the death of Franz Ferdinand.**

You did not answer this question Show Correct Answer

Time spent / Accuracy Analysis

Time taken by you to answer this question	**1**
Avg. time spent on this question by all students	**100**
Difficulty Level	**D**
Avg. time spent on this question by students who got this question right	**104**
% of students who attempted this question	**27.94**
% of students who got the question right of those who attempted	**13.65**

Video Solution

Text Solution

Number of words and Explanatory notes for RC:

Number of words: 679

Europe had somehow slithered over the brink into the boiling cauldron of war – The argument presented here is simply that no country is entirely responsible for causing the war. Instead, Europe had accidentally slipped into a state of war. We are looking for an option that doesn't weaken this argument. In other words, we will look to eliminate all the options that tend to attribute the blame to one or more parties for the outbreak of war.
Option A: This option attributes the blame to Britain and hence, weakens the argument that the war was an accident. Hence, choice A is not the answer.
Option B: This option attributes the blame to Germany and hence, weakens the argument. Hence, choice B is not the answer.
Option C: This option blames Germany for being the aggressor and is hence, weakening the argument that the war was not deliberately unleashed. Hence, choice C is not the answer.
Option D: This information is used in the passage as a way of justifying the actions of Austria and Hungary. In other words, this information/option exculpates Austrians and Hungarians indicating it wasn't their fault that they end up as a participant in the war. Avenging the death of Franz Ferdinand has been depicted as a just reason to fight the way. Therefore, this option doesn't weaken the argument. Choice D is the answer.

Choice (D)

undefined

DIRECTIONS *for questions 23 to 25:* The passage given below is accompanied by a set of three questions. Choose the best answer to each question.

In his day job, as Lucasian professor of mathematics at Cambridge University until he retired in 2009, Stephen Hawking was particularly working on black holes. Black holes, which were predicted by maths before they were discovered in nature, are singularities - points where the familiar laws of physics cease to apply. They are surrounded, however, by surfaces known as event horizons. Anything crossing the event horizon is swallowed forever.

This was a problem. The second law of thermodynamics, the strictest of nature's constraints, says that entropy, a form of disorder, must always increase. But if high-entropy systems could be sucked into nothingness by black holes, that would not be the case. Dr Hawking solved this problem by showing that black holes themselves had entropy, and that the more they swallowed, the greater it got. This in turn implied that black holes had a temperature, and thus must give off radiation.

He gave his name to it, but "Hawking radiation" surprised him as much as anyone; he claimed to have just tripped over it, to his annoyance. The radiation was not observed in his lifetime, which was why he never won a Nobel prize. But the link it provided between the theory of relativity, quantum mechanics and thermodynamics was rich food for physicists' imaginations.

His interest in singularities was not restricted to black holes. The universe, which was formed in the Big Bang, can be viewed as a singularity, albeit one which human beings are seeing from the inside rather than the out. And he was intensely interested in its origin, coeval with that of time itself. To explain this concept, he compared it to asking what lay south of the South Pole. He revelled in these unanswered, perhaps unanswerable, questions. When his disability left him behind in conversations, he happily drifted off to them again.

His work also included large N cosmology, Yang-Mills instantons and the S matrix, anti de Sitter space, quantum entanglement, the Brans-Dicke and Hoyle-Narlikar theories of gravitation and Euclidean quantum gravity. His contribution to scientific journals continued throughout, but he wanted most keenly to outline for non-experts, baffled by the weirdness of scientific terms and the apparent contradictions of modern theories, humanity's place in the universe.

The departure of scientific reality from what common sense suggests is going on (the sun going round the Earth, for example) no longer threatens political institutions, but it threatens the human psyche just as much as it did in Galileo's day. Dr Hawking's South Pole of time was 13.7 billion years in the past - three times as old as the Earth. His mathematics showed that the universe, though finite in time, might be infinite in space.

Q23. According to the passage, what problem associated with black holes did Stephen Hawking help resolve?

a) **Why do all familiar laws of physics including the theory of relativity, quantum mechanics and thermodynamics cease to apply in case of black holes?**

b) **Why, when high-entropy systems cross the event horizon of black holes, does the entropy of the black holes decrease?**

c) **Why, when low-entropy systems cross the event horizon of black holes, do the black holes emit a lot of radiation?**

d) **Why, when high-entropy systems cross the event horizon of black holes, does the entropy of the black holes increase?**

You did not answer this question Show Correct Answer

Time spent / Accuracy Analysis

Time taken by you to answer this question	**5**
Avg. time spent on this question by all students	**282**
Difficulty Level	**VE**
Avg. time spent on this question by students who got this question right	**286**
% of students who attempted this question	**48.31**
% of students who got the question right of those who attempted	**56.55**

Video Solution

Text Solution

Number of words and Explanatory notes for RC:

Number of words: 446

Refer to paras 1 and 2 of the passage.
Option A: Black holes, which were predicted by maths before they were discovered in nature, are singularities – points where the familiar laws of physics cease to apply. But choice A is not the specific problem that Stephen Hawking helped to resolve. It was already known before Stephen Hawking began his work on black holes that familiar laws of physics do not apply in case of black holes.
Option B: The second law of thermodynamics, the strictest of nature's constraints, says that entropy, a form of disorder, must always increase. But if high-entropy systems could be sucked into nothingness by black holes, that would not be the case. The entropy of the system does not decrease but it increases. Choice B is negated.
Option C: That black holes had a temperature, and thus must give off radiation, is an implication from Dr Stephen Hawking's findings. But "Hawking radiation" was not observed in his lifetime. Choice C does not specifically answer the question.
Option D: Black holes are surrounded, however, by surfaces known as event horizons. Anything crossing the event horizon is swallowed for ever. The second law of thermodynamics, the strictest of nature's constraints, says that entropy, a form of disorder, must always increase. But if high-entropy systems could be sucked into nothingness by black holes, that would not be the case. Dr Hawking solved this problem by showing that black holes themselves had entropy, and that the more they swallowed, the greater it got. Choice D is the answer. Choice (D)

undefined

DIRECTIONS *for questions 23 to 25:* The passage given below is accompanied by a set of three questions. Choose the best answer to each question.

In his day job, as Lucasian professor of mathematics at Cambridge University until he retired in 2009, Stephen Hawking was particularly working on black holes. Black holes, which were predicted by maths before they were discovered in nature, are singularities - points where the familiar laws of physics cease to apply. They are surrounded, however, by surfaces known as event horizons. Anything crossing the event horizon is swallowed forever.

This was a problem. The second law of thermodynamics, the strictest of nature's constraints, says that entropy, a form of disorder, must always increase. But if high-entropy systems could be sucked into nothingness by black holes, that would not be the case. Dr Hawking solved this problem by showing that black holes themselves had entropy, and that the more they swallowed, the greater it got. This in turn implied that black holes had a temperature, and thus must give off radiation.

He gave his name to it, but "Hawking radiation" surprised him as much as anyone; he claimed to have just tripped over it, to his annoyance. The radiation was not observed in his lifetime, which was why he never won a Nobel prize. But the link it provided between the theory of relativity, quantum mechanics and thermodynamics was rich food for physicists' imaginations.

His interest in singularities was not restricted to black holes. The universe, which was formed in the Big Bang, can be viewed as a singularity, albeit one which human beings are seeing from the inside rather than the out. And he was intensely interested in its origin, coeval with that of time itself. To explain this concept, he compared it to asking what lay south of the South Pole. He revelled in these unanswered, perhaps unanswerable, questions. When his disability left him behind in conversations, he happily drifted off to them again.

His work also included large N cosmology, Yang-Mills instantons and the S matrix, anti de Sitter space, quantum entanglement, the Brans-Dicke and Hoyle-Narlikar theories of gravitation and Euclidean quantum gravity. His contribution to scientific journals continued throughout, but he wanted most keenly to outline for non-experts, baffled by the weirdness of scientific terms and the apparent contradictions of modern theories, humanity's place in the universe.

The departure of scientific reality from what common sense suggests is going on (the sun going round the Earth, for example) no longer threatens political institutions, but it threatens the human psyche just as much as it did in Galileo's day. Dr Hawking's South Pole of time was 13.7 billion years in the past - three times as old as the Earth. His mathematics showed that the universe, though finite in time, might be infinite in space.

Q24. What does the author imply when he says "And he was intensely interested in its origin, coeval with that of time itself." (para 4)?

Stephen Hawking was of the view that ...

- a) **besides black holes, time and the universe are also singularities.**
- b) **before the Big Bang, time did not exist.**
- c) **before the Big Bang, there were no black holes.**
- d) **time existed before the Big Bang but not space.**

You did not answer this question Show Correct Answer

Time spent / Accuracy Analysis

Time taken by you to answer this question	**0**
Avg. time spent on this question by all students	**127**
Difficulty Level	**E**
Avg. time spent on this question by students who got this question right	**134**
% of students who attempted this question	**43.34**
% of students who got the question right of those who attempted	**15.22**

Video Solution

Text Solution

Number of words and Explanatory notes for RC:

Number of words: 446

Option A: His interest in singularities was not restricted to black holes. The universe, which was formed in the Big Bang, can be viewed as a singularity, albeit one which human beings are seeing from the inside rather than the out. Choice A is not the implication of the given sentence in the question.
Option B: And he was intensely interested in its origin, coeval with that of time itself. Coeval means having the same age or date of origin; contemporary. From the following lines "To explain this concept, he compared it to asking what lay south of the South Pole. He revelled in these unanswered, perhaps unanswerable, questions.", we can infer that Stephen Hawking believed that before the Big Bang i.e. before the universe was formed, there was neither time nor space. Choice B is the answer.
Option C: Dr Stephen Hawking's interest in singularities was not restricted to black holes. He believed that the universe itself is one big singularity. But choice C cannot be inferred from the passage and it is certainly not the implication of the given sentence in the question.
Option D: His mathematics showed that the universe, though finite in time, might be infinite in space. But choice D which says that "time existed before the Big Bang but not space" is incorrect. Coeval means having the same age or date of origin; contemporary. Time existed after the universe was formed. Choice D is not the answer. Choice (B)

undefined

DIRECTIONS *for questions 23 to 25:* The passage given below is accompanied by a set of three questions. Choose the best answer to each question.

In his day job, as Lucasian professor of mathematics at Cambridge University until he retired in 2009, Stephen Hawking was particularly working on black holes. Black holes, which were predicted by maths before they were discovered in nature, are singularities - points where the familiar laws of physics cease to apply. They are surrounded, however, by surfaces known as event horizons. Anything crossing the event horizon is swallowed forever.

This was a problem. The second law of thermodynamics, the strictest of nature's constraints, says that entropy, a form of disorder, must always increase. But if high-entropy systems could be sucked into nothingness by black holes, that would not be the case. Dr Hawking solved this problem by showing that black holes themselves had entropy, and that the more they swallowed, the greater it got. This in turn implied that black holes had a temperature, and thus must give off radiation.

He gave his name to it, but "Hawking radiation" surprised him as much as anyone; he claimed to have just tripped over it, to his annoyance. The radiation was not observed in his lifetime, which was why he never won a Nobel prize. But the link it provided between the theory of relativity, quantum mechanics and thermodynamics was rich food for physicists' imaginations.

His interest in singularities was not restricted to black holes. The universe, which was formed in the Big Bang, can be viewed as a singularity, albeit one which human beings are seeing from the inside rather than the out. And he was intensely interested in its origin, coeval with that of time itself. To explain this concept, he compared it to asking what lay south of the South Pole. He revelled in these unanswered, perhaps unanswerable, questions. When his disability left him behind in conversations, he happily drifted off to them again.

His work also included large N cosmology, Yang-Mills instantons and the S matrix, anti de Sitter space, quantum entanglement, the Brans-Dicke and Hoyle-Narlikar theories of gravitation and Euclidean quantum gravity. His contribution to scientific journals continued throughout, but he wanted most keenly to outline for non-experts, baffled by the weirdness of

scientific terms and the apparent contradictions of modern theories, humanity's place in the universe.

The departure of scientific reality from what common sense suggests is going on (the sun going round the Earth, for example) no longer threatens political institutions, but it threatens the human psyche just as much as it did in Galileo's day. Dr Hawking's South Pole of time was 13.7 billion years in the past - three times as old as the Earth. His mathematics showed that the universe, though finite in time, might be infinite in space.

Q25. All of the following can be inferred about Stephen Hawking and his work from the passage EXCEPT?

- a) **He proved mathematically that the universe could be infinite in space.**
- b) **He was keen on explaining scientific research to lay people.**
- c) **His work encompassed the S matrix, quantum entanglement and Euclidean quantum gravity.**
- d) **He detected Hawking radiation within a super-massive black hole.**

You did not answer this question Show Correct Answer

Time spent / Accuracy Analysis

Time taken by you to answer this question	**13**
Avg. time spent on this question by all students	**91**
Difficulty Level	**E**
Avg. time spent on this question by students who got this question right	**85**
% of students who attempted this question	**45.15**
% of students who got the question right of those who attempted	**57.1**

Video Solution

Text Solution

Number of words and Explanatory notes for RC:

Number of words: 446

Option A: Stephen Hawking was intensely interested in its origin, coeval with that of time itself. Coeval means having the same age or date of origin; contemporary. To explain this concept, he compared it to asking what lay south of the South Pole. Dr Hawking's South Pole of time was 13.7 billion years in the past—three times as old as the Earth. His mathematics showed that the universe, though finite in time, might be infinite in space. Choice A is true and is not the answer.
Option B: His contribution to scientific journals continued throughout, but he wanted most keenly to outline for non-experts, baffled by the weirdness of scientific terms and the apparent contradictions of modern theories, humanity's place in the universe. Choice B is true and is not the answer.
Option C: His work also included large N cosmology, Yang-Mills instantons and the S matrix, anti de Sitter space, quantum entanglement, the Brans-Dicke and Hoyle-Narlikar theories of gravitation and Euclidean quantum gravity. Choice C is also true and is not the answer.
Option D: Dr Hawking solved this problem by showing that black holes themselves had entropy, and that the more they swallowed, the greater it got. This in turn implied that black holes had a temperature, and thus must give off radiation. He gave his name to it, but "Hawking radiation" surprised him as much as anyone; he claimed to have just tripped over it, to his annoyance. The radiation was not observed in his lifetime, which was why he never won a Nobel prize. "Hawking radiation" was a hypothesis. Choice D is not correct and is the answer. Choice (D)

undefined

DIRECTIONS *for questions 26 to 28:* The passage given below is accompanied by a set of three questions. Choose the best answer to each question.

According to Locke, ideas exist prior to or independently of words, which serve merely as their vehicles. To use another metaphor, although words may be the midwives of ideas, their true parents are experience and reason. Leibniz suggested the same model, writing that "languages are the best mirrors of the human mind."

Locke's emphasis on individual words, as well as the foundational role he assigned to psychology, were attacked by the German logician Gottlob Frege (1848-1925). The fundamental notion of this theory is that the meaning of a sentence - the "thought" it expresses - is a function of its structure, or syntax. The thought, in turn, is determined not by the psychological state of the speaker or hearer - thoughts are not "mental" entities - but by the logical inferences the sentence permits. Sentence meaning, furthermore, is prior to word meaning, in the sense that the meanings of individual words are determined only by what they contribute to the thoughts expressed by the sentences in which the words appear. Frege's theory of sentence meaning explains how it is possible for different people to grasp the same thought though no two people associate the corresponding sentence with exactly the same ideas, images, or other mental experiences.

An enormously influential element of Frege's theory of meaning was his distinction between the referent of an expression - the thing it refers to - and its sense. The sense of an expression is both its contribution to the thought expressed by the sentence and the "mode of presentation" of its referent. By means of this distinction, Frege was able to show how there can be informative statements of identity. The sentence "*Everest is Chomolungma"* is informative - it may even represent a geographic discovery - whereas the sentence "*Everest is Everest"* is not. Yet they appear to have the same meaning - both seem to say, of one and the same mountain, that it is identical to itself. How, then, can one sentence be informative and the other trivial? Frege's answer is that "*Everest"* and "*Chomolungma"* (the Tibetan name) "present" the mountain in different ways.

In Frege's logic, sentences and singular terms are "complete" or "saturated" expressions, and predicates are incomplete or unsaturated expressions. Predicates are functions, analogous to the functions of mathematics; thus, *… "is a lecturer"* and *… "loves" …* are analogous to …× 4 (…multiplied by 4). The result of applying the predicate …× 4to the numeral 3 is an expression, 12, whose referent is the number obtained when 3 is multiplied by 4. Similarly, the result of attaching the predicate *… "is a lecturer"* to the name "*John"* is a sentence, "*John is a lecturer"*, whose value is True if John is a lecturer and False otherwise, likewise the result of attaching *… "loves"…* to "*John"* and "*Mary"*. Frege also treated sentential connectives, such as "*and"* and "*not"*, as functions producing new truth-values when applied to other sentences as arguments.

Q26. How would Frege view the role played by the "predicate(s)" in the logical analysis of a sentence?

- a) **Predicates, like individual words, are "complete" or "saturated" expressions.**
- b) **Various predicate-functions are incomplete, and the truth-value of the entire sentence can be determined by the outputs of these functions.**
- c) **Various predicate-functions are isolated, and the truth-value of the whole sentence cannot be determined by the outputs of these functions.**
- d) **Predicate meaning is prior to word meaning but sentence meaning is shaped by the mind.**

You did not answer this question Show Correct Answer

Time spent / Accuracy Analysis

Time taken by you to answer this question	**0**
Avg. time spent on this question by all students	**267**
Difficulty Level	**VD**
Avg. time spent on this question by students who got this question right	**278**
% of students who attempted this question	**16.17**
% of students who got the question right of those who attempted	**74.38**

Video Solution

Text Solution

Number of words and Explanatory notes for RC:

Number of words: 484

Option A: Choice A is wrong. In Frege's logic, sentences and singular terms are "complete" or "saturated" expressions, and predicates_are incomplete or unsaturated expressions.
Option B: Predicates are incomplete or unsaturated expressions. Predicates are functions, analogous to the functions of mathematics. The result of attaching the predicate … "is a lecturer" to the name "John" is a sentence, "John is a lecturer", whose value is True if John is a lecturer and False otherwise, likewise the result of attaching … "loves"… to "John" and "Mary". From the last sentence of the passage also, choice B can be inferred.
Option C: The first part of choice C is correct but the second part is incorrect.
Option D: The first part of Choice D is a distortion of "Sentence meaning, furthermore, is prior to word meaning, in the sense that the meanings of individual words are determined only by what they contribute to the thoughts expressed by the sentences in which the words appear". According to Locke, ideas exist prior to or independently of words. However, the fundamental notion of Frege's theory is that the meaning of a sentence – the "thought" it expresses – is a function of its structure, or syntax. The thought, in turn, is determined not by the psychological state of the speaker or hearer – thoughts are not "mental" entities – but by the logical inferences the sentence permits. Sentence meaning, furthermore, is prior to word meaning. Choice D is not the specific answer about Frege's view about "predicates" in the logical analysis of a sentence. Choice (B)

undefined

DIRECTIONS *for questions 26 to 28:* The passage given below is accompanied by a set of three questions. Choose the best answer to each question.

According to Locke, ideas exist prior to or independently of words, which serve merely as their vehicles. To use another metaphor, although words may be the midwives of ideas, their true parents are experience and reason. Leibniz suggested the same model, writing that "languages are the best mirrors of the human mind."

Locke's emphasis on individual words, as well as the foundational role he assigned to psychology, were attacked by the German logician Gottlob Frege (1848-1925). The fundamental notion of this theory is that the meaning of a sentence - the "thought" it expresses - is a function of its structure, or syntax. The thought, in turn, is determined not by the psychological state of the speaker or hearer - thoughts are not "mental" entities - but by the logical inferences the sentence permits. Sentence meaning, furthermore, is prior to word meaning, in the sense that the meanings of individual words are determined only by what they contribute to the thoughts expressed by the sentences in which the words appear. Frege's theory of sentence meaning explains how it is possible for different people to grasp the same thought though no two people associate the corresponding sentence with exactly the same ideas, images, or other mental experiences.

An enormously influential element of Frege's theory of meaning was his distinction between the referent of an expression - the thing it refers to - and its sense. The sense of an expression is both its contribution to the thought expressed by the sentence and the "mode of presentation" of its referent. By means of this distinction, Frege was able to show how there can be informative statements of identity. The sentence "*Everest is Chomolungma"* is informative - it may even represent a geographic discovery - whereas the sentence "*Everest is Everest"* is not. Yet they appear to have the same meaning - both seem to say, of one and the same mountain, that it is identical to itself. How, then, can one sentence be informative and the other trivial? Frege's answer is that "*Everest"* and "*Chomolungma"* (the Tibetan name) "present" the mountain in different ways.

In Frege's logic, sentences and singular terms are "complete" or "saturated" expressions, and predicates are incomplete or unsaturated expressions. Predicates are functions, analogous to the functions of mathematics; thus, *… "is a lecturer"* and *… "loves" …* are analogous to …× 4 (…multiplied by 4). The result of applying the predicate …× 4to the numeral 3 is an

expression, 12, whose referent is the number obtained when 3 is multiplied by 4. Similarly, the result of attaching the predicate … *"is a lecturer"* to the name "*John"* is a sentence, "*John is a lecturer"*, whose value is True if John is a lecturer and False otherwise, likewise the result of attaching … *"loves"*… to "*John"* and "*Mary"*. Frege also treated sentential connectives, such as "*and"* and "*not"*, as functions producing new truth-values when applied to other sentences as arguments.

Q27. Three of the following would be consistent with the views of Locke and Leibniz mentioned in the first para of the passage. Pick the exception.

a) **An individual's maturity and rationality establish ideas in the first place and these are conveyed by words to other individuals.**

b) **Minds are stocked with ideas and concepts prior to or independently of language.**

c) **Ideas are self-sustaining and independent and words are intermediate carriers or vehicles for ideas.**

d) **Language completely determines the thoughts of its users, the mind is shaped by the language.**

You did not answer this question Show Correct Answer

Time spent / Accuracy Analysis

Time taken by you to answer this question	**0**
Avg. time spent on this question by all students	**93**
Difficulty Level	**M**
Avg. time spent on this question by students who got this question right	**82**
% of students who attempted this question	**18.93**
% of students who got the question right of those who attempted	**56.02**

Video Solution

Text Solution

Number of words and Explanatory notes for RC:

Number of words: 484

Option A: Words are simply vehicles for ideas, which have an **independent, self-sustaining** existence. To use another metaphor, although words may be the midwives of ideas, their true parents are experience and reason. Choice A is true and is not the answer.
Option B: Words may be the midwives of ideas but their true parents are experience and reason i.e. Words carry ideas but ideas exist independently of words. Choice B is also true and is not the answer.
Option C: Ideas exist independently of words, which serve merely as their vehicles. Choice C is also true and is not the answer.
Option D: Choice D will not be consistent with the view of the first paragraph of the passage. Ideas exist prior to or independently of words. Choice D is the answer.

Choice (D)

undefined

DIRECTIONS *for questions 26 to 28:* The passage given below is accompanied by a set of three questions. Choose the best answer to each question.

According to Locke, ideas exist prior to or independently of words, which serve merely as their vehicles. To use another metaphor, although words may be the midwives of ideas, their true parents are experience and reason. Leibniz suggested the same model, writing that "languages are the best mirrors of the human mind."

Locke's emphasis on individual words, as well as the foundational role he assigned to psychology, were attacked by the German logician Gottlob Frege (1848-1925). The fundamental notion of this theory is that the meaning of a sentence - the "thought" it expresses - is a function of its structure, or syntax. The thought, in turn, is determined not by the psychological state of the speaker or hearer - thoughts are not "mental" entities - but by the logical inferences the sentence permits.

Sentence meaning, furthermore, is prior to word meaning, in the sense that the meanings of individual words are determined only by what they contribute to the thoughts expressed by the sentences in which the words appear. Frege's theory of sentence meaning explains how it is possible for different people to grasp the same thought though no two people associate the corresponding sentence with exactly the same ideas, images, or other mental experiences.

An enormously influential element of Frege's theory of meaning was his distinction between the referent of an expression - the thing it refers to - and its sense. The sense of an expression is both its contribution to the thought expressed by the sentence and the "mode of presentation" of its referent. By means of this distinction, Frege was able to show how there can be informative statements of identity. The sentence "*Everest is Chomolungma"* is informative - it may even represent a geographic discovery - whereas the sentence "*Everest is Everest"* is not. Yet they appear to have the same meaning - both seem to say, of one and the same mountain, that it is identical to itself. How, then, can one sentence be informative and the other trivial? Frege's answer is that "*Everest"* and "*Chomolungma"* (the Tibetan name) "present" the mountain in different ways.

In Frege's logic, sentences and singular terms are "complete" or "saturated" expressions, and predicates are incomplete or unsaturated expressions. Predicates are functions, analogous to the functions of mathematics; thus, *… "is a lecturer"* and *… "loves" …* are analogous to …× 4 (…multiplied by 4). The result of applying the predicate …× 4to the numeral 3 is an expression, 12, whose referent is the number obtained when 3 is multiplied by 4. Similarly, the result of attaching the predicate *… "is a lecturer"* to the name "*John"* is a sentence, "*John is a lecturer"*, whose value is True if John is a lecturer and False otherwise, likewise the result of attaching *… "loves"…* to "*John"* and "*Mary"*. Frege also treated sentential connectives, such as "*and"* and "*not"*, as functions producing new truth-values when applied to other sentences as arguments.

Q28. What can be inferred from the discussion about "Everest" and "Chomolungma" in the two corresponding sentences mentioned in para 3 of the passage?

a) **Any two persons will associate the sentences with the same ideas, images and other mental experiences.**

b) **The terms have different referents but the same sense and make similar contributions to the thoughts expressed by the two sentences.**

c) **The terms have the same referent but different senses and these make different contributions to the thoughts expressed by the two sentences.**

d) **The terms have the same referent and the same sense but make different contributions to the thoughts expressed by the two sentences.**

You did not answer this question Show Correct Answer

Time spent / Accuracy Analysis

Time taken by you to answer this question	**7**
Avg. time spent on this question by all students	**124**
Difficulty Level	**VD**
Avg. time spent on this question by students who got this question right	**126**
% of students who attempted this question	**16.78**
% of students who got the question right of those who attempted	**40.05**

Video Solution

Text Solution

Number of words and Explanatory notes for RC:

Number of words: 484

Refer to para 3 of the passage. The sense of an expression is both its contribution to the thought expressed by the sentence and the "mode of presentation" of its referent.
Option A: Choice A is not the answer. It is possible for different people to grasp the same thought – though no two people associate the corresponding sentence with exactly the same ideas, images, or other mental experiences.
Option B: Yet they appear to have the same meaning – both seem to say, of one and the same mountain, that it is identical to itself. So "Everest" and "Chomolungma" (the Tibetan name) refer to the same mountain. They have the same referent. Hence "different referents" in choice B is incorrect.
Option C: The sense of an expression is both its contribution to the thought expressed by the sentence and the "mode of presentation" of its referent. The sentence "Everest is Chomolungma", for example, is informative – it may even represent a geographic discovery – whereas the sentence "Everest is Everest" is not. Yet they appear to have the same meaning – both seem to say, of one and the same mountain, that it is identical to itself. How, then, can one sentence be informative and the other trivial? Frege's answer is that, "Everest" and "Chomolungma" (the Tibetan name) "present" the mountain in different ways. Hence choice C is correct.
Option D: Choice D is distorted. While "same referent" in choice D is correct, "same sense" is not. The sense of an expression is both its contribution to the thought expressed by the sentence and the "mode of presentation" of its referent. Frege's answer is that "Everest" and "Chomolungma" (the Tibetan name) "present" the mountain in different ways. So the "sense" is different in both the given sentences. Hence choice D is not the answer. Choice (C)

undefined

DIRECTIONS *for questions 29 to 34:* The passage given below is accompanied by a set of six questions. Choose the best answer to each question.

Years ago, in my novel *Cleaver* (2006), I imagined a media man fleeing to the Alps, looking for a place so high where there will be no noise at all. But even 2,500 metres up, he finds the wind moaning on the rock face, his blood beating in his ears, his thoughts chattering ever more loudly in his head.

When we think of silence, because we yearn for it or because we're scared of it, we're forced to recognize that what we're talking about is actually a mental state, a question of consciousness. If perception of sound depends on our state of mind, then conversely a state of mind can hardly exist without an external world with which it is in relation and that conditions it - either our present environment, or some past event that echoes in our minds.

Silence, then, is always relative. Our experience of it is more interesting than the acoustic effect itself. And the most interesting kind of silence is that of a mind free of words, free of thoughts, free of language, a mental silence. When we have a perception of being tormented by noise, a lot of that noise is actually in our heads - the interminable fizz of anxious thoughts or the self-regarding monologue that for much of the time constitutes our consciousness.

Such a mental voice is also a source of self-regard. This is the catch that springs the trap. The mind wishes the monologue to end, and yet, simultaneously not to end. If it did end, where would identity be? It yearns for silence and fears silence. The two emotions grow stronger together. For example, when a person contemplates a radical change in life - going to live alone in the moors of Galway perhaps, or to a 10-day silent Buddhist retreat - the more he or she yearns for it, the more he or she

fears the moment of change. So our ideas of silence are tied up with questions of self-loathing and self-regard.

Our desire for silence often has more to do with an inner silence than an outer. Or a combination of the two. Noise provokes our anger, or at least an engagement, and prevents inner silence. But absence of noise exposes us to the loud voice in our heads. This voice is constitutive of what we call self. If we want it to fall silent, aren't we yearning for the end of self?

We have strategies for getting by. There are soft solutions such as listening to music, or reading. Consciousness is invited to follow someone else's score or storyline. We temporarily hand over the controls to another director. But as soon as we stop reading or listening, the mental noise starts again. More mortifying are solutions involving ritual prayer, rosaries, or mantras which feel like a full-scale assault on the self, with acoustic weapons. Despite, or perhaps because of, my religious childhood, I have never desired a mantra because I did not resolve anything or learn anything about myself: the mental noise starts again.

Or one might try Vipassana - a form of mediation that goes to the heart of this conflict between yearning for silence and fearing it. In Vipassana you concentrate on sensation *in stillness.* Sitting still, denying yourself physical movement, the mind's instinctive reaction is to retreat into its normal buzzing monologue - hoping that focusing the mind elsewhere will relieve physical discomfort. Silence, then, combined with stillness - the two are intimately related - invites us to observe the relationship between consciousness and the body, in movement and moving thought. You discover how the construct of consciousness and self, something we all share, normally gets through time, to a large extent by ignoring our physical being and existence in the present - moment.

This form of meditation alters the mind's relationship with the body. It invites the meditator to focus attention on all parts of the body equally, without exception, to guide the consciousness through the body. So we become aware that even when we are still, everything inside us is constantly moving and changing.

The process is neither that of a single switch being turned, nor of a steady continuum, but of a series of small gains and losses; perhaps a larger step forward, then a small relapse. If one is persistent, undaunted, in one's attempts to concentrate, if one is successful in showing neither aversion to pain nor indulgence in pleasure, then, very slowly, the stillness and silence deepen in an atmosphere of beatitude that is simultaneously and indivisibly both physical and mental. It is as if, as the body is slowly put together and all its component parts unite in an intense present, so the historical self is taken apart and falls away. At no point is it experienced as a loss, but rather as a fullness of existence.

Q29. Which of the following can be inferred from the second para of the passage?

- a) **The less sound there is outside, the more our own thoughts deafen us.** **Your answer is incorrect**
- b) **A state of mind can exist without the existence of an external world.**
- c) **There is never any state of mind that is not in some part, however small, in relation to the external world.**
- d) **Our perception of the external world tells us as more about ourselves than it does about the world.**

Show Correct Answer

Time spent / Accuracy Analysis

Time taken by you to answer this question	**112**
Avg. time spent on this question by all students	**288**
Difficulty Level	**M**
Avg. time spent on this question by students who got this question right	**290**
% of students who attempted this question	**43.74**
% of students who got the question right of those who attempted	**60.8**

Video Solution

Text Solution

Number of words and Explanatory notes for RC:

Number of words: 802

Refer to the second para of the passage.
Option A: Choice A is true from the first para of the passage (his thoughts chattering ever more loudly in his head) but it does not answer the question.
Option B: Conversely a state of mind can hardly exist without an external world with which it is in relation and that conditions it ... Hence choice B is negated.
Option C: If perception of sound depends on our state of mind, then conversely a state of mind can hardly exist without an external world with which it is in relation and that conditions it. Hence choice C can be inferred to be true.
Option D: Conversely a state of mind can hardly exist without an external world with which it is in relation and that conditions it – either our immediate present environment, or something that happened in the past and that now echoes or goes on happening in our minds. Choice D would have been true if it read: Our perception of the external world tells us as much about ourselves as it does about the world. Choice (C)

undefined

DIRECTIONS *for questions 29 to 34:* The passage given below is accompanied by a set of six questions. Choose the best answer to each question.

Years ago, in my novel *Cleaver* (2006), I imagined a media man fleeing to the Alps, looking for a place so high where there will be no noise at all. But even 2,500 metres up, he finds the wind moaning on the rock face, his blood beating in his ears, his thoughts chattering ever more loudly in his head.

When we think of silence, because we yearn for it or because we're scared of it, we're forced to recognize that what we're talking about is actually a mental state, a question of consciousness. If perception of sound depends on our state of mind, then conversely a state of mind can hardly exist without an external world with which it is in relation and that conditions it - either our present environment, or some past event that echoes in our minds.

Silence, then, is always relative. Our experience of it is more interesting than the acoustic effect itself. And the most interesting kind of silence is that of a mind free of words, free of thoughts, free of language, a mental silence. When we have a perception of being tormented by noise, a lot of that noise is actually in our heads - the interminable fizz of anxious thoughts or the self-regarding monologue that for much of the time constitutes our consciousness.

Such a mental voice is also a source of self-regard. This is the catch that springs the trap. The mind wishes the monologue to end, and yet, simultaneously not to end. If it did end, where would identity be? It yearns for silence and fears silence. The two emotions grow stronger together. For example, when a person contemplates a radical change in life - going to live alone in the moors of Galway perhaps, or to a 10-day silent Buddhist retreat - the more he or she yearns for it, the more he or she fears the moment of change. So our ideas of silence are tied up with questions of self-loathing and self-regard.

Our desire for silence often has more to do with an inner silence than an outer. Or a combination of the two. Noise provokes our anger, or at least an engagement, and prevents inner silence. But absence of noise exposes us to the loud voice in our heads. This voice is constitutive of what we call self. If we want it to fall silent, aren't we yearning for the end of self?

We have strategies for getting by. There are soft solutions such as listening to music, or reading. Consciousness is invited to follow someone else's score or storyline. We temporarily hand over the controls to another director. But as soon as we stop reading or listening, the mental noise starts again. More mortifying are solutions involving ritual prayer, rosaries, or mantras which feel like a full-scale assault on the self, with acoustic weapons. Despite, or perhaps because of, my religious childhood, I have never desired a mantra because I did not resolve anything or learn anything about myself: the mental noise starts again.

Or one might try Vipassana - a form of mediation that goes to the heart of this conflict between yearning for silence and fearing it. In Vipassana you concentrate on sensation *in stillness.* Sitting still, denying yourself physical movement, the

mind's instinctive reaction is to retreat into its normal buzzing monologue - hoping that focusing the mind elsewhere will relieve physical discomfort. Silence, then, combined with stillness - the two are intimately related - invites us to observe the relationship between consciousness and the body, in movement and moving thought. You discover how the construct of consciousness and self, something we all share, normally gets through time, to a large extent by ignoring our physical being and existence in the present - moment.

This form of meditation alters the mind's relationship with the body. It invites the meditator to focus attention on all parts of the body equally, without exception, to guide the consciousness through the body. So we become aware that even when we are still, everything inside us is constantly moving and changing.

The process is neither that of a single switch being turned, nor of a steady continuum, but of a series of small gains and losses; perhaps a larger step forward, then a small relapse. If one is persistent, undaunted, in one's attempts to concentrate, if one is successful in showing neither aversion to pain nor indulgence in pleasure, then, very slowly, the stillness and silence deepen in an atmosphere of beatitude that is simultaneously and indivisibly both physical and mental. It is as if, as the body is slowly put together and all its component parts unite in an intense present, so the historical self is taken apart and falls away. At no point is it experienced as a loss, but rather as a fullness of existence.

Q30. What is the author's objective in introducing the example of a person "going to live alone in the moors of Galway or to attend a 10-day silent Buddhist retreat." (para 4)?

a) **To prove that once the mental voice quietens, ideas of self-regard emerge in the mind.** **Your answer is incorrect**

b) **To suggest that the end of the monologue is inviting and not frightening.**

c) **To demonstrate that the yearning of silence and the fearing of silence are mutually exclusive.**

d) **To indicate that the more one yearns for silence, the more one fears the loss of identity if the mental voice should quieten.**

Show Correct Answer

Time spent / Accuracy Analysis

Time taken by you to answer this question	**101**
Avg. time spent on this question by all students	**134**
Difficulty Level	**M**
Avg. time spent on this question by students who got this question right	**132**
% of students who attempted this question	**39.59**
% of students who got the question right of those who attempted	**62.48**

Video Solution

Text Solution

Number of words and Explanatory notes for RC:

Number of words: 802

Option A: Choice A is distorted. Such a mental voice is also a source of self-regard. This is the catch that springs the trap. Our ideas of silence are tied up with questions of self-loathing and self-regard. The word 'prove' in choice A makes it incorrect. Further "once the mental voice quietens" in choice A is wrong.
Option B: The mind wishes the monologue to end, and yet, simultaneously not to end. If it did end, where would identity be? So choice B is incorrect. Choice B would be correct if it read: ... the end of the monologue is inviting but not frightening.
Option C: Choice C is incorrect. The mind yearns for silence and fears silence. The two emotions grow stronger together. So, the yearning of silence and the fearing of silence are not mutually exclusive, rather they complement each other.
Option D: The mind yearns for silence and fears silence. The two emotions grow stronger together. For example, when a person contemplates a radical change in life – going to live alone in the moors of Galway perhaps, or to a 10-day silent Buddhist retreat – the more he or she yearns for it, the more he or she fears the moment of change. We can say that one fears the loss of identity if the mental voice should quieten. This makes choice D the correct answer. Choice (D)

undefined

DIRECTIONS *for questions 29 to 34:* The passage given below is accompanied by a set of six questions. Choose the best answer to each question.

Years ago, in my novel *Cleaver* (2006), I imagined a media man fleeing to the Alps, looking for a place so high where there will be no noise at all. But even 2,500 metres up, he finds the wind moaning on the rock face, his blood beating in his ears, his thoughts chattering ever more loudly in his head.

When we think of silence, because we yearn for it or because we're scared of it, we're forced to recognize that what we're talking about is actually a mental state, a question of consciousness. If perception of sound depends on our state of mind, then conversely a state of mind can hardly exist without an external world with which it is in relation and that conditions it - either our present environment, or some past event that echoes in our minds.

Silence, then, is always relative. Our experience of it is more interesting than the acoustic effect itself. And the most interesting kind of silence is that of a mind free of words, free of thoughts, free of language, a mental silence. When we have a perception of being tormented by noise, a lot of that noise is actually in our heads - the interminable fizz of anxious thoughts or the self-regarding monologue that for much of the time constitutes our consciousness.

Such a mental voice is also a source of self-regard. This is the catch that springs the trap. The mind wishes the monologue to end, and yet, simultaneously not to end. If it did end, where would identity be? It yearns for silence and fears silence. The two emotions grow stronger together. For example, when a person contemplates a radical change in life - going to live alone in the moors of Galway perhaps, or to a 10-day silent Buddhist retreat - the more he or she yearns for it, the more he or she fears the moment of change. So our ideas of silence are tied up with questions of self-loathing and self-regard.

Our desire for silence often has more to do with an inner silence than an outer. Or a combination of the two. Noise provokes our anger, or at least an engagement, and prevents inner silence. But absence of noise exposes us to the loud voice in our heads. This voice is constitutive of what we call self. If we want it to fall silent, aren't we yearning for the end of self?

We have strategies for getting by. There are soft solutions such as listening to music, or reading. Consciousness is invited to follow someone else's score or storyline. We temporarily hand over the controls to another director. But as soon as we stop reading or listening, the mental noise starts again. More mortifying are solutions involving ritual prayer, rosaries, or mantras which feel like a full-scale assault on the self, with acoustic weapons. Despite, or perhaps because of, my religious childhood, I have never desired a mantra because I did not resolve anything or learn anything about myself: the mental noise starts again.

Or one might try Vipassana - a form of mediation that goes to the heart of this conflict between yearning for silence and fearing it. In Vipassana you concentrate on sensation *in stillness.* Sitting still, denying yourself physical movement, the mind's instinctive reaction is to retreat into its normal buzzing monologue - hoping that focusing the mind elsewhere will relieve physical discomfort. Silence, then, combined with stillness - the two are intimately related - invites us to observe the relationship between consciousness and the body, in movement and moving thought. You discover how the construct of consciousness and self, something we all share, normally gets through time, to a large extent by ignoring our physical being and existence in the present - moment.

This form of meditation alters the mind's relationship with the body. It invites the meditator to focus attention on all parts of the body equally, without exception, to guide the consciousness through the body. So we become aware that even when we are still, everything inside us is constantly moving and changing.

The process is neither that of a single switch being turned, nor of a steady continuum, but of a series of small gains and losses; perhaps a larger step forward, then a small relapse. If one is persistent, undaunted, in one's attempts to concentrate, if one is successful in showing neither aversion to pain nor indulgence in pleasure, then, very slowly, the stillness and silence deepen in an atmosphere of beatitude that is simultaneously and indivisibly both physical and mental. It is as if, as the body is slowly put together and all its component parts unite in an intense present, so the historical self is taken apart and falls away. At no point is it experienced as a loss, but rather as a fullness of existence.

Q31. What is the primary reason for the author to say that he has never desired a mantra?

- a) **Once the mantra is over, the chattering self would bounce back.** **Your answer is correct**
- b) **The author had a religious childhood and he does not believe in mantras.**
- c) **The author does not want to permanently hand over the controls of his consciousness to another agent.**
- d) **The author's desire to invest in the self is greater than the desire for the end of the self.**

Time spent / Accuracy Analysis

Time taken by you to answer this question	**30**
Avg. time spent on this question by all students	**115**
Difficulty Level	**VD**
Avg. time spent on this question by students who got this question right	**106**
% of students who attempted this question	**35.9**
% of students who got the question right of those who attempted	**59.3**

Video Solution

Text Solution

Number of words and Explanatory notes for RC:

Number of words: 802

Refer to the fifth para of the passage. More radical, and mortifying perhaps, are solutions involving ritual prayer, rosaries, or mantras.
Option A: But as soon as we stop reading or listening, the mental noise starts again. I've never desired a mantra because we do not resolve anything or learn anything about ourselves: the mental noise starts again. Hence choice A is correct.
Option B: Despite, or perhaps because of, my religious childhood, I have never tried this (ritual prayer, rosaries, or mantras). But choice B is not a clearcut answer to the question.
Option C: Consciousness is invited to follow someone else's score or storyline. We temporarily hand over the controls to another director. But as soon as we stop reading or listening, the mental noise starts again. There is no question of permanently handing over the controls of one's consciousness to another director. Hence choice C is incorrect.
Option D: Choice D cannot be inferred and is not the answer to the question. Talk about silence becomes talk about consciousness, the nature of selfhood, and the modern dilemma in general: the desire to invest in the self and the desire for the end of the self. So choice D is not the answer. Choice (A)

undefined

DIRECTIONS *for questions 29 to 34:* The passage given below is accompanied by a set of six questions. Choose the best answer to each question.

Years ago, in my novel *Cleaver* (2006), I imagined a media man fleeing to the Alps, looking for a place so high where there will be no noise at all. But even 2,500 metres up, he finds the wind moaning on the rock face, his blood beating in his ears, his thoughts chattering ever more loudly in his head.

When we think of silence, because we yearn for it or because we're scared of it, we're forced to recognize that what we're talking about is actually a mental state, a question of consciousness. If perception of sound depends on our state of mind, then conversely a state of mind can hardly exist without an external world with which it is in relation and that conditions it - either our present environment, or some past event that echoes in our minds.

Silence, then, is always relative. Our experience of it is more interesting than the acoustic effect itself. And the most interesting kind of silence is that of a mind free of words, free of thoughts, free of language, a mental silence. When we have a perception of being tormented by noise, a lot of that noise is actually in our heads - the interminable fizz of anxious thoughts or the self-regarding monologue that for much of the time constitutes our consciousness.

Such a mental voice is also a source of self-regard. This is the catch that springs the trap. The mind wishes the monologue to end, and yet, simultaneously not to end. If it did end, where would identity be? It yearns for silence and fears silence. The two emotions grow stronger together. For example, when a person contemplates a radical change in life - going to live alone in the moors of Galway perhaps, or to a 10-day silent Buddhist retreat - the more he or she yearns for it, the more he or she fears the moment of change. So our ideas of silence are tied up with questions of self-loathing and self-regard.

Our desire for silence often has more to do with an inner silence than an outer. Or a combination of the two. Noise provokes our anger, or at least an engagement, and prevents inner silence. But absence of noise exposes us to the loud voice in our heads. This voice is constitutive of what we call self. If we want it to fall silent, aren't we yearning for the end of self?

We have strategies for getting by. There are soft solutions such as listening to music, or reading. Consciousness is invited to

follow someone else's score or storyline. We temporarily hand over the controls to another director. But as soon as we stop reading or listening, the mental noise starts again. More mortifying are solutions involving ritual prayer, rosaries, or mantras which feel like a full-scale assault on the self, with acoustic weapons. Despite, or perhaps because of, my religious childhood, I have never desired a mantra because I did not resolve anything or learn anything about myself: the mental noise starts again.

Or one might try Vipassana - a form of mediation that goes to the heart of this conflict between yearning for silence and fearing it. In Vipassana you concentrate on sensation *in stillness.* Sitting still, denying yourself physical movement, the mind's instinctive reaction is to retreat into its normal buzzing monologue - hoping that focusing the mind elsewhere will relieve physical discomfort. Silence, then, combined with stillness - the two are intimately related - invites us to observe the relationship between consciousness and the body, in movement and moving thought. You discover how the construct of consciousness and self, something we all share, normally gets through time, to a large extent by ignoring our physical being and existence in the present - moment.

This form of meditation alters the mind's relationship with the body. It invites the meditator to focus attention on all parts of the body equally, without exception, to guide the consciousness through the body. So we become aware that even when we are still, everything inside us is constantly moving and changing.

The process is neither that of a single switch being turned, nor of a steady continuum, but of a series of small gains and losses; perhaps a larger step forward, then a small relapse. If one is persistent, undaunted, in one's attempts to concentrate, if one is successful in showing neither aversion to pain nor indulgence in pleasure, then, very slowly, the stillness and silence deepen in an atmosphere of beatitude that is simultaneously and indivisibly both physical and mental. It is as if, as the body is slowly put together and all its component parts unite in an intense present, so the historical self is taken apart and falls away. At no point is it experienced as a loss, but rather as a fullness of existence.

Q32. Which of the following best summarizes the main objective(s) of the author in the passage?

a) **To point out that our objection to noise in the outer world is that it makes it harder to focus on the buzz we produce for ourselves in our inner world.**

b) **To point out that there is a catharsis of exhaustion with the dazzling, disturbing voice of the mind and how perseverance in the practice of vipassana can still that inner noise.** **Your answer is incorrect**

c) **To explain the relationship between stillness and silence in various forms of meditation.**

d) **To discuss the conflict between the yearning for silence and fearing it and how vipassana can alter the mind's relationship with the body.**

Show Correct Answer

Time spent / Accuracy Analysis

Time taken by you to answer this question	**101**
Avg. time spent on this question by all students	**95**
Difficulty Level	**M**
Avg. time spent on this question by students who got this question right	**94**
% of students who attempted this question	**27.13**
% of students who got the question right of those who attempted	**66.89**

Video Solution

Text Solution

Number of words and Explanatory notes for RC:

Number of words: 802

Option A: In para 3, we are told that when we have a perception of being tormented by noise, a lot of that noise is actually in our heads – the interminable fizz of anxious thoughts or the self-regarding monologue that for much of the time constitutes our consciousness. While choice A may be true, it fails to capture the main idea of the text and also the primary concern of the author in writing this passage. Choice A is incomplete and very narrow in scope.
Option B: The most interesting kind of silence is that of a mind *free of words,* free of thoughts, free of language, a mental silence. The author does refer to the noise in our minds as disturbing: when we have a perception of being tormented by noise, a lot of that noise is actually in our heads – the interminable fizz of anxious thoughts or the self-regarding monologue. But "catharsis of exhaustion" is a term that cannot be inferred from the passage. Catharsis means the process of releasing, and thereby providing relief from, strong or repressed emotions. Further "perseverance in the practice of vipassana" has been mentioned in the concluding para as a piece of advice. If one is persistent, undaunted, in one's attempts to concentrate, if one is successful in showing neither aversion to pain nor indulgence in pleasure, then, very slowly, the stillness and silence deepen in an atmosphere of beatitude that is simultaneously and indivisibly both physical and mental. But choice B does not capture the main concerns of the author in the passage.
Option C: Silence, then, combined with stillness – the two are intimately related – invites us to observe the relationship between consciousness and the body, in movement and moving thought. This relationship has been studied in vipassana only and not in various forms of meditation. Choice C is not the answer.
Option D: Early on in the passage, in paras 2 and 4, the author talks about one yearning for silence and fearing silence. While discussing strategies for getting by, the author mentions vipassana – a form of mediation that goes to the heart of this conflict between yearning for silence and fearing it. This form of meditation alters the mind's relationship with the body. The last three paras of the passage delve on this point. Hence choice D is correct. Choice (D)

undefined

DIRECTIONS *for questions 29 to 34:* The passage given below is accompanied by a set of six questions. Choose the best answer to each question.

Years ago, in my novel *Cleaver* (2006), I imagined a media man fleeing to the Alps, looking for a place so high where there will be no noise at all. But even 2,500 metres up, he finds the wind moaning on the rock face, his blood beating in his ears, his thoughts chattering ever more loudly in his head.

When we think of silence, because we yearn for it or because we're scared of it, we're forced to recognize that what we're talking about is actually a mental state, a question of consciousness. If perception of sound depends on our state of mind, then conversely a state of mind can hardly exist without an external world with which it is in relation and that conditions it - either our present environment, or some past event that echoes in our minds.

Silence, then, is always relative. Our experience of it is more interesting than the acoustic effect itself. And the most interesting kind of silence is that of a mind free of words, free of thoughts, free of language, a mental silence. When we have a perception of being tormented by noise, a lot of that noise is actually in our heads - the interminable fizz of anxious thoughts or the self-regarding monologue that for much of the time constitutes our consciousness.

Such a mental voice is also a source of self-regard. This is the catch that springs the trap. The mind wishes the monologue to end, and yet, simultaneously not to end. If it did end, where would identity be? It yearns for silence and fears silence. The two emotions grow stronger together. For example, when a person contemplates a radical change in life - going to live alone in the moors of Galway perhaps, or to a 10-day silent Buddhist retreat - the more he or she yearns for it, the more he or she fears the moment of change. So our ideas of silence are tied up with questions of self-loathing and self-regard.

Our desire for silence often has more to do with an inner silence than an outer. Or a combination of the two. Noise provokes our anger, or at least an engagement, and prevents inner silence. But absence of noise exposes us to the loud voice in our heads. This voice is constitutive of what we call self. If we want it to fall silent, aren't we yearning for the end of self?

We have strategies for getting by. There are soft solutions such as listening to music, or reading. Consciousness is invited to follow someone else's score or storyline. We temporarily hand over the controls to another director. But as soon as we stop reading or listening, the mental noise starts again. More mortifying are solutions involving ritual prayer, rosaries, or mantras which feel like a full-scale assault on the self, with acoustic weapons. Despite, or perhaps because of, my religious childhood, I have never desired a mantra because I did not resolve anything or learn anything about myself: the mental noise starts again.

Or one might try Vipassana - a form of mediation that goes to the heart of this conflict between yearning for silence and fearing it. In Vipassana you concentrate on sensation *in stillness.* Sitting still, denying yourself physical movement, the mind's instinctive reaction is to retreat into its normal buzzing monologue - hoping that focusing the mind elsewhere will relieve physical discomfort. Silence, then, combined with stillness - the two are intimately related - invites us to observe the relationship between consciousness and the body, in movement and moving thought. You discover how the construct of consciousness and self, something we all share, normally gets through time, to a large extent by ignoring our physical being and existence in the present - moment.

This form of meditation alters the mind's relationship with the body. It invites the meditator to focus attention on all parts of the body equally, without exception, to guide the consciousness through the body. So we become aware that even when we are still, everything inside us is constantly moving and changing.

The process is neither that of a single switch being turned, nor of a steady continuum, but of a series of small gains and losses; perhaps a larger step forward, then a small relapse. If one is persistent, undaunted, in one's attempts to concentrate, if one is successful in showing neither aversion to pain nor indulgence in pleasure, then, very slowly, the stillness and silence deepen in an atmosphere of beatitude that is simultaneously and indivisibly both physical and mental. It is as if, as the body is slowly put together and all its component parts unite in an intense present, so the historical self is taken apart and falls away. At no point is it experienced as a loss, but rather as a fullness of existence.

Q33. Where is the passage most likely culled from?

- a) **An encyclopedia of social psychology**
- b) **An essay in philosophy**
- c) **A magazine article on sociology**
- d) **A journal of cognitive psychology** **Your answer is incorrect**

Show Correct Answer

Time spent / Accuracy Analysis

Time taken by you to answer this question	**71**
Avg. time spent on this question by all students	**47**
Difficulty Level	**D**
Avg. time spent on this question by students who got this question right	**50**
% of students who attempted this question	**30.45**
% of students who got the question right of those who attempted	**13.55**

Video Solution

Text Solution

Number of words and Explanatory notes for RC:

Number of words: 802

Option A: An encyclopedia contains articles on various topics, often arranged in alphabetical order, dealing either with the whole range of human knowledge or with one particular subject. However, it offers information in varied detail, but does not get into analysis or evaluation. Further, social psychology is the branch of psychology that deals with social interactions, including their origins and their effects on the individual. Social psychology is the study of how people's thoughts, feelings, and behaviors are influenced by the actual, imagined, or implied presence of others. The passage does not dwell on these themes. Hence choice A is not the answer.
Option B: Refer to certain lines in the passage. We're forced to recognize that what we're talking about is actually a mental state, a question of consciousness. ..... the self-regarding monologue that for much of the time constitutes our consciousness. Consciousness is invited to follow someone else's score or storyline. Silence, then, combined with stillness – the two are intimately related – invites us to observe the relationship between consciousness and the body, in movement and moving thought. ... how the construct of consciousness and self, something we all share, normally gets through time, to a large extent by ignoring our physical being and existence in the present – moment. These discussions fall under the realm of philosophy which is the study of the fundamental nature of knowledge, reality, and existence, and which acts as a guiding principle for behaviour. Philosophy is the study of general and fundamental problems concerning matters such as existence, knowledge, values, reason, mind, and language. The passage talks about "state of mind", "mental silence", "mental voice" etc. Hence choice B is the correct answer.
Option C: Sociology is a very broad field. It includes the study of the development, structure, and functioning of human society and also includes the study of social problems. It can be inferred that this passage does not come under the area of Sociology. Choice C is not the answer. The purpose of a magazine is to report news of some kind, or even fiction, in a longer form that a newspaper but much more flexible than a book. The language of the passage indicates that we are looking at something longer and more focused than would be found in a newspaper or a magazine.
Option D: Cognitive psychology is the study of mental processes such as attention, language use, memory, perception, problem solving, creativity, and thinking. This passage does not really focus on these areas. As explained in choice B, this passage has a philosophical focus rather than a psychological focus. Hence choice D is not the answer. Choice (B)

undefined

DIRECTIONS *for questions 29 to 34:* The passage given below is accompanied by a set of six questions. Choose the best answer to each question.

Years ago, in my novel *Cleaver* (2006), I imagined a media man fleeing to the Alps, looking for a place so high where there will be no noise at all. But even 2,500 metres up, he finds the wind moaning on the rock face, his blood beating in his ears, his thoughts chattering ever more loudly in his head.

When we think of silence, because we yearn for it or because we're scared of it, we're forced to recognize that what we're talking about is actually a mental state, a question of consciousness. If perception of sound depends on our state of mind, then conversely a state of mind can hardly exist without an external world with which it is in relation and that conditions it - either our present environment, or some past event that echoes in our minds.

Silence, then, is always relative. Our experience of it is more interesting than the acoustic effect itself. And the most interesting kind of silence is that of a mind free of words, free of thoughts, free of language, a mental silence. When we have a perception of being tormented by noise, a lot of that noise is actually in our heads - the interminable fizz of anxious thoughts or the self-regarding monologue that for much of the time constitutes our consciousness.

Such a mental voice is also a source of self-regard. This is the catch that springs the trap. The mind wishes the monologue to end, and yet, simultaneously not to end. If it did end, where would identity be? It yearns for silence and fears silence. The two emotions grow stronger together. For example, when a person contemplates a radical change in life - going to live alone in the moors of Galway perhaps, or to a 10-day silent Buddhist retreat - the more he or she yearns for it, the more he or she fears the moment of change. So our ideas of silence are tied up with questions of self-loathing and self-regard.

Our desire for silence often has more to do with an inner silence than an outer. Or a combination of the two. Noise provokes our anger, or at least an engagement, and prevents inner silence. But absence of noise exposes us to the loud voice in our heads. This voice is constitutive of what we call self. If we want it to fall silent, aren't we yearning for the end of self?

We have strategies for getting by. There are soft solutions such as listening to music, or reading. Consciousness is invited to follow someone else's score or storyline. We temporarily hand over the controls to another director. But as soon as we stop reading or listening, the mental noise starts again. More mortifying are solutions involving ritual prayer, rosaries, or mantras which feel like a full-scale assault on the self, with acoustic weapons. Despite, or perhaps because of, my religious childhood, I have never desired a mantra because I did not resolve anything or learn anything about myself: the mental noise starts again.

Or one might try Vipassana - a form of mediation that goes to the heart of this conflict between yearning for silence and fearing it. In Vipassana you concentrate on sensation *in stillness.* Sitting still, denying yourself physical movement, the mind's instinctive reaction is to retreat into its normal buzzing monologue - hoping that focusing the mind elsewhere will relieve physical discomfort. Silence, then, combined with stillness - the two are intimately related - invites us to observe the relationship between consciousness and the body, in movement and moving thought. You discover how the construct of consciousness and self, something we all share, normally gets through time, to a large extent by ignoring our physical being and existence in the present - moment.

This form of meditation alters the mind's relationship with the body. It invites the meditator to focus attention on all parts of the body equally, without exception, to guide the consciousness through the body. So we become aware that even when we are still, everything inside us is constantly moving and changing.

The process is neither that of a single switch being turned, nor of a steady continuum, but of a series of small gains and losses; perhaps a larger step forward, then a small relapse. If one is persistent, undaunted, in one's attempts to concentrate, if one is successful in showing neither aversion to pain nor indulgence in pleasure, then, very slowly, the stillness and silence deepen in an atmosphere of beatitude that is simultaneously and indivisibly both physical and mental. It is as if, as the body is slowly put together and all its component parts unite in an intense present, so the historical self is taken apart and falls away. At no point is it experienced as a loss, but rather as a fullness of existence.

Q34. The author is least likely to agree with which of the following?

a) **Talk about silence becomes talk about consciousness and the nature of selfhood.**

b) **The sound of silence is the end of the self.** **Your answer is incorrect**

c) **During Vipassana, the mind instinctively retreats into the consciousness and one does not focus on one's body at all.**

d) **In Vipassana, we guide the consciousness through the body and we try not to react in any way - showing neither aversion to pain nor indulgence in pleasure.**

Show Correct Answer

Time spent / Accuracy Analysis

Time taken by you to answer this question	**69**
Avg. time spent on this question by all students	**129**
Difficulty Level	**M**
Avg. time spent on this question by students who got this question right	**111**
% of students who attempted this question	**25.95**
% of students who got the question right of those who attempted	**51.3**

Video Solution

Text Solution

Number of words and Explanatory notes for RC:

Number of words: 802

Option A: When we think of silence, because we yearn for it or because we're scared of it, we're forced to recognize that what we're talking about is actually a mental state, a question of consciousness. A lot of that noise is actually in our heads – the interminable fizz of anxious thoughts or the self-regarding monologue that for much of the time constitutes our consciousness. Noise provokes our anger, or at least an engagement, and prevents inner silence. But absence of noise (silence) exposes us to the loud voice in our heads. This voice is constitutive of what we call self. So the author would agree with choice A. Choice A is not the answer.
Option B: Noise provokes our anger, or at least an engagement, and prevents inner silence. But absence of noise exposes us to the loud voice in our heads. This voice is constitutive of what we call self. If we want it to fall silent, aren't we yearning for the end of self? Hence choice B is true and is not the answer.
Option C: .... the interminable fizz of anxious thoughts or the self-regarding monologue that for much of the time constitutes our consciousness. Sitting still during vipassana, denying yourself physical movement, the mind's instinctive reaction is to retreat into its normal buzzing monologue. Vipassana invites the meditator to focus attention on all parts of the body equally, without exception, to guide the consciousness through the body. So choice C is false and is the required answer.
Option D: Vipassana invites the meditator to focus attention on all parts of the body equally, without exception, to guide the consciousness through the body. If one is successful in showing neither aversion to pain nor indulgence in pleasure, then, very slowly, the stillness and silence deepen in an atmosphere of beatitude that is simultaneously and indivisibly both physical and mental. Choice D is true and is not the answer. Choice (C)

undefined

DIRECTIONS *for questions 1 to 4:* Answer the questions on the basis of the information given below.

Exactly 2000 students wrote the year-end examinations for second year of B.A. (Political Science) in a university. The university released the marks scored by the students over four days, Day 1 through Day 4, such that, on each day, the university released the marks of exactly 500 students. Further, on each day, after releasing the results, the university also displayed the rank of each student (based on descending order of the marks of the students) among all the students for whom the results were released till that day.

Five students, A through E, were among the 2000 students who wrote the examinations in that university and the marks of each of the five students was released on Day 1. The following table provides the ranks of each of the five students on each of the four days:

Student	Day 1	Day 2	Day 3	Day 4
A	158	205	299	502
B	208	318	429	685
C	25	50	102	201
D	321	556	778	1084
E	87	129	196	312

Q1. DIRECTIONS *for questions 1 and 2:* Type in your answer in the input box provided below the question.

Among the students whose marks were released on Day 3, how many students were ranked better than B but worse than A?

You did not answer this question Show Correct Answer

Time spent / Accuracy Analysis

Time taken by you to answer this question	**30**
Avg. time spent on this question by all students	**301**
Difficulty Level	**M**
Avg. time spent on this question by students who got this question right	**310**
% of students who attempted this question	**48.71**
% of students who got the question right of those who attempted	**17.62**

Video Solution

Text Solution

On Day 1, the five students were ranked among 500 students, whose ranks were released on Day 1.
From the ranks of Day 1, we can see that C scored better than E, who scored better than A, who scored better than B, who scored better than D.
Also, 24 students scored better than C on Day 1. On Day 2, 49 students scored better than C. This implies that an additional 25 students (49 – 24 = 25) scored better than C. The marks of these 25 students were released on Day 2. Similarly, among the students whose marks were released on Day 3, 52 students (101 – 49 = 52) scored better than C. Among the students whose marks were released on Day 4, 99 students scored better than C.
Among the students whose marks were released on Day 1, 86 students scored better than E. Among the students whose marks were released on Day 2, 42 (128 – 86 = 42) students scored better than E. Among the students whose marks were released on Day 3, 67 (195 – 128 = 67) students scored better than E. Among the students whose marks were released on Day 4, 116 (311 – 195 = 116) students scored better than E.
On Day 1, 86 students scored better than E. Of these 86 students, 24 students scored better than C and 1 student was C himself. All the students ranked from 26 to 86 must have scored worse than C and better than E. Hence, there must be 86 – 25 = 61 students who scored better than E but worse than C. On Day 2, 42 students scored better than E. Of these 42 students, 25 students scored better than C. Hence, 42 – 25 = 17 students scored better than E but worse than C.
Similarly, we can find the number of students who scored better than and worse than each of the seven students.
Let a, b, c, d and e represent the marks scored by A, B, C, D and E respectively. The following table provides the number of students who scored better than and worse than the five students:

Number of students whose marks are	Among the students whose results are released on			
	Day 1	Day 2	Day 3	Day 4
> c	24	25	52	99
< c and > e	61	17	15	17
< e and > a	70	5	27	87
< a and > b	49	63	17	53
< b and > d	112	125	111	50
< d	179	265	278	194

Among the students whose marks were released on Day 3, 17 students were ranked better than B but worse than A. Ans: (17)

undefined

DIRECTIONS *for questions 1 to 4:* Answer the questions on the basis of the information given below.

Exactly 2000 students wrote the year-end examinations for second year of B.A. (Political Science) in a university. The university released the marks scored by the students over four days, Day 1 through Day 4, such that, on each day, the university released the marks of exactly 500 students. Further, on each day, after releasing the results, the university also displayed the rank of each student (based on descending order of the marks of the students) among all the students for whom the results were released till that day.

Five students, A through E, were among the 2000 students who wrote the examinations in that university and the marks of each of the five students was released on Day 1. The following table provides the ranks of each of the five students on each of the four days:

Student	Day 1	Day 2	Day 3	Day 4
A	158	205	299	502
B	208	318	429	685
C	25	50	102	201
D	321	556	778	1084
E	87	129	196	312

Q2. DIRECTIONS *for questions 1 and 2:* Type in your answer in the input box provided below the question.

Among the students whose marks were released on Day 4, how many students were ranked worse than A but better than D?

You did not answer this question Show Correct Answer

Time spent / Accuracy Analysis

Time taken by you to answer this question	**0**
Avg. time spent on this question by all students	**104**
Difficulty Level	**M**
Avg. time spent on this question by students who got this question right	**119**
% of students who attempted this question	**44.76**
% of students who got the question right of those who attempted	**16.62**

Video Solution

Text Solution

On Day 1, the five students were ranked among 500 students, whose ranks were released on Day 1.
From the ranks of Day 1, we can see that C scored better than E, who scored better than A, who scored better than B, who scored better than D.
Also, 24 students scored better than C on Day 1. On Day 2, 49 students scored better than C. This implies that an additional 25 students (49 – 24 = 25) scored better than C. The marks of these 25 students were released on Day 2. Similarly, among the students whose marks were released on Day 3, 52 students (101 – 49 = 52) scored better than C. Among the students whose marks were released on Day 4, 99 students scored better than C.
Among the students whose marks were released on Day 1, 86 students scored better than E. Among the students whose marks were released on Day 2, 42 (128 – 86 = 42) students scored better than E. Among the students whose marks were released on Day 3, 67 (195 – 128 = 67) students scored better than E. Among the students whose marks were released on Day 4, 116 (311 – 195 = 116) students scored better than E.
On Day 1, 86 students scored better than E. Of these 86 students, 24 students scored better than C and 1 student was C himself. All the students ranked from 26 to 86 must have scored worse than C and better than E. Hence, there must be 86 – 25 = 61 students who scored better than E but worse than C. On Day 2, 42 students scored better than E. Of these 42 students, 25 students scored better than C. Hence, 42 – 25 = 17 students scored better than E but worse than C.
Similarly, we can find the number of students who scored better than and worse than each of the seven students.
Let a, b, c, d and e represent the marks scored by A, B, C, D and E respectively. The following table provides the number of students who scored better than and worse than the five students:

Number of students whose marks are	Among the students whose results are released on			
	Day 1	Day 2	Day 3	Day 4
> c	24	25	52	99
< c and > e	61	17	15	17
< e and > a	70	5	27	87
< a and > b	49	63	17	53
< b and > d	112	125	111	50
< d	179	265	278	194

Among the students whose marks were released on Day 4, 53 students were ranked worse than A and better than B. 50 students were ranked worse than B and better than D. The number of students who were ranked worse than A and better than D will be 53 + 50 = 103. Ans: (103)

undefined

DIRECTIONS *for questions 1 to 4:* Answer the questions on the basis of the information given below.

Exactly 2000 students wrote the year-end examinations for second year of B.A. (Political Science) in a university. The university released the marks scored by the students over four days, Day 1 through Day 4, such that, on each day, the university released the marks of exactly 500 students. Further, on each day, after releasing the results, the university also displayed the rank of each student (based on descending order of the marks of the students) among all the students for whom the results were released till that day.

Five students, A through E, were among the 2000 students who wrote the examinations in that university and the marks of each of the five students was released on Day 1. The following table provides the ranks of each of the five students on each of the four days:

Student	Day 1	Day 2	Day 3	Day 4
A	158	205	299	502
B	208	318	429	685
C	25	50	102	201
D	321	556	778	1084
E	87	129	196	312

Q3. DIRECTIONS *for questions 3 and 4:* Select the correct alternative from the given choices.

F, who was another student who wrote the examinations, was ranked 745 on Day 2. Which of the following can be his rank on Day 3?

I. 785

II. 851

III. 967

IV. 1242

V. 1351

- a) **I, II, III, IV and V**
- b) **II, III, IV and V**
- c) **III and IV**
- d) **III, IV and V**

You did not answer this question Show Correct Answer

Time spent / Accuracy Analysis

Time taken by you to answer this question	**0**
Avg. time spent on this question by all students	**174**
Difficulty Level	**M**
Avg. time spent on this question by students who got this question right	**190**
% of students who attempted this question	**28.9**
% of students who got the question right of those who attempted	**32.64**

Video Solution

Text Solution

On Day 1, the five students were ranked among 500 students, whose ranks were released on Day 1.
From the ranks of Day 1, we can see that C scored better than E, who scored better than A, who scored better than B, who scored better than D.
Also, 24 students scored better than C on Day 1. On Day 2, 49 students scored better than C. This implies that an additional 25 students (49 – 24 = 25) scored better than C. The marks of these 25 students were released on Day 2. Similarly, among the students whose marks were released on Day 3, 52 students (101 – 49 = 52) scored better than C. Among the students whose marks were released on Day 4, 99 students scored better than C.
Among the students whose marks were released on Day 1, 86 students scored better than E. Among the students whose marks were released on Day 2, 42 (128 – 86 = 42) students scored better than E. Among the students whose marks were released on Day 3, 67 (195 – 128 = 67) students scored better than E. Among the students whose marks were released on Day 4, 116 (311 – 195 = 116) students scored better than E.
On Day 1, 86 students scored better than E. Of these 86 students, 24 students scored better than C and 1 student was C himself. All the students ranked from 26 to 86 must have scored worse than C and better than E. Hence, there must be 86 – 25 = 61 students who scored better than E but worse than C. On Day 2, 42 students scored better than E. Of these 42 students, 25 students scored better than C. Hence, 42 – 25 = 17 students scored better than E but worse than C.
Similarly, we can find the number of students who scored better than and worse than each of the seven students.
Let a, b, c, d and e represent the marks scored by A, B, C, D and E respectively. The following table provides the number of students who scored better than and worse than the five students:

Number of students whose marks are	**Among the students whose results are released on**			
	Day 1	**Day 2**	**Day 3**	**Day 4**
> c	24	25	52	99
< c and > e	61	17	15	17
< e and > a	70	5	27	87
< a and > b	49	63	17	53
< b and > d	112	125	111	50
< d	179	265	278	194

F was ranked 745 on Day 2. Hence, there were 744 students who were ranked better than F on Day 2. Also, F was ranked worse than D.
Among the students whose results were released on Day 3, there were 222 students ranked better than D. All these 222 students must have been ranked better than F as well. Hence, the rank of F must increase by at least 222.
The rank of F must be at least 745 + 222 = 967.
Also, there were 1000 – 745 = 255 students who were ranked worse than F. Hence, the rank of F can be at most 1500 – 255 = 1245.
Therefore, the rank of F must be at least 967 and at most 1245.
Hence, only III and IV are possible. Choice (C)

undefined

DIRECTIONS *for questions 1 to 4:* Answer the questions on the basis of the information given below.

Exactly 2000 students wrote the year-end examinations for second year of B.A. (Political Science) in a university. The university released the marks scored by the students over four days, Day 1 through Day 4, such that, on each day, the university released the marks of exactly 500 students. Further, on each day, after releasing the results, the university also displayed the rank of each student (based on descending order of the marks of the students) among all the students for whom the results were released till that day.

Five students, A through E, were among the 2000 students who wrote the examinations in that university and the marks of each of the five students was released on Day 1. The following table provides the ranks of each of the five students on each of the four days:

Student	Day 1	Day 2	Day 3	Day 4
A	158	205	299	502
B	208	318	429	685
C	25	50	102	201
D	321	556	778	1084
E	87	129	196	312

Q4. DIRECTIONS *for questions 3 and 4:* Select the correct alternative from the given choices.

P, Q, R, S, T and U are students who wrote the examinations and their marks were all released on Day 2. Which of the following statements is definitely false?

- a) **All of them were ranked worse than C but better than E.**
- b) **All of them were ranked worse than E but better than A.**
- c) **All of them were ranked worse than A but better than B.**
- d) **None of the above**

You did not answer this question Show Correct Answer

Time spent / Accuracy Analysis

Time taken by you to answer this question	**0**
Avg. time spent on this question by all students	**105**
Difficulty Level	**M**
Avg. time spent on this question by students who got this question right	**143**
% of students who attempted this question	**27.63**
% of students who got the question right of those who attempted	**11.43**

Video Solution

Text Solution

On Day 1, the five students were ranked among 500 students, whose ranks were released on Day 1.
From the ranks of Day 1, we can see that C scored better than E, who scored better than A, who scored better than B, who scored better than D.
Also, 24 students scored better than C on Day 1. On Day 2, 49 students scored better than C. This implies that an additional 25 students (49 – 24 = 25) scored better than C. The marks of these 25 students were released on Day 2. Similarly, among the students whose marks were released on Day 3, 52 students (101 – 49 = 52) scored better than C. Among the students whose marks were released on Day 4, 99 students scored better than C.
Among the students whose marks were released on Day 1, 86 students scored better than E. Among the students whose marks were released on Day 2, 42 (128 – 86 = 42) students scored better than E. Among the students whose marks were released on Day 3, 67 (195 – 128 = 67) students scored better than E. Among the students whose marks were released on Day 4, 116 (311 – 195 = 116) students scored better than E.
On Day 1, 86 students scored better than E. Of these 86 students, 24 students scored better than C and 1 student was C himself. All the students ranked from 26 to 86 must have scored worse than C and better than E. Hence, there must be 86 – 25 = 61 students who scored better than E but worse than C. On Day 2, 42 students scored better than E. Of these 42 students, 25 students scored better than C. Hence, 42 – 25 = 17 students scored better than E but worse than C.
Similarly, we can find the number of students who scored better than and worse than each of the seven students.
Let a, b, c, d and e represent the marks scored by A, B, C, D and E respectively. The following table provides the number of students who scored better than and worse than the five students:

Number of students whose marks are	Among the students whose results are released on			
	Day 1	Day 2	Day 3	Day 4
> c	24	25	52	99
< c and > e	61	17	15	17
< e and > a	70	5	27	87
< a and > b	49	63	17	53
< b and > d	112	125	111	50
< d	179	265	278	194

Among the students whose results were released on Day 2, only 5 students were ranked better than A and worse than E. Hence, all six of them cannot be ranked worse than E and better than A. Choice (B)

undefined

DIRECTIONS *for questions 5 to 8:* Answer the questions on the basis of the information given below.

Three persons, A, B and C, participated in a shooting competition, comprising*n* rounds. In each round, the three persons shoot at a target, exactly once each, one after the other, in the same order as given above. All the *n* rounds were conducted one after the other without any break in between. During the competition, for any person, the person who shot at the target immediately before that person (not necessarily from the same round) is referred to as the preceding shooter of that person.

After the *n* rounds, they noticed that their hits and misses in each round, except the first round, all followed certain rules, which are given below.

For any person, say X, in any round,

- if X hit the target in the previous round and his preceding shooter also hit the target, X missed the target in that round.
- if X missed the target in the previous round but his preceding shooter hit the target, X hit the target in that round.
- if X hit the target in the previous round but his preceding shooter missed the target, X hit the target in that round.
- if X missed the target in the previous round and his preceding shooter also missed the target, X missed the target in that round.

Further, it is known that at least one person hit the target in the competition.

Q5. DIRECTIONS *for question 5:* Type in your answer in the input box provided below the question.

If in the first round A is the only person to have hit the target, how many times would C have hit the target after fifteen rounds?

You did not answer this question Show Correct Answer

Time spent / Accuracy Analysis

Time taken by you to answer this question	**54**
Avg. time spent on this question by all students	**404**
Difficulty Level	**D**
Avg. time spent on this question by students who got this question right	**515**
% of students who attempted this question	**17.09**
% of students who got the question right of those who attempted	**18.54**

Video Solution

Text Solution

Assume that all the three of them hit the target in the first round.
In the second round, A would have missed the target, B would have hit and C would have missed.
In the third round, A would have missed, B and C would have hit.
In the fourth round, A would have hit, B would have missed and C would have hit.
In the fifth round, A and B would have missed and C would have hit.
In the sixth round, A and B would have hit and C would have missed.
In the seventh round, A would have hit and B and C would have missed.
In the eighth round, all the three of them would have hit the target again.
Hence, the cycle will repeat after every seven rounds.
Further, there are only seven possibilities for hits and misses for the three persons (since at least one person hit the target in the competition). (Think of hits and misses in each round as a 3 digit binary number. There will only be 8 possibilities – from 000 to 111 – of which 000 is not possible as this will result is no person hitting the target in the entire competition)
All these seven possibilities are covered in the above seven cases.
Hence, the competition must have proceeded in the above mentioned pattern starting from any round.
The rounds in which each person hit and missed in given in the following table, starting from the nth round (1 represents a hit and 0 represents a miss):

	n	n + 1	n + 2	n + 3	n + 4	n + 5	n + 6
A	1	0	0	1	0	1	1
B	1	1	1	0	0	1	0
C	1	0	1	1	1	0	0

Given that A is the only person to have hit the target in the first round.
Every 7 rounds, C would have hit the target exactly 4 times.
Hence, C would have hit the target 8 times in the first 14 rounds.
In the fifteenth round, C would not have hit the target.
Hence, C would have hit the target 8 times in the first 15 rounds. Ans: (8)

undefined

DIRECTIONS *for questions 5 to 8:* Answer the questions on the basis of the information given below.

Three persons, A, B and C, participated in a shooting competition, comprising*n* rounds. In each round, the three persons shoot at a target, exactly once each, one after the other, in the same order as given above. All the *n* rounds were conducted one after the other without any break in between. During the competition, for any person, the person who shot at the target immediately before that person (not necessarily from the same round) is referred to as the preceding shooter of that person.

After the *n* rounds, they noticed that their hits and misses in each round, except the first round, all followed certain rules, which are given below.

For any person, say X, in any round,

- if X hit the target in the previous round and his preceding shooter also hit the target, X missed the target in that round.
- if X missed the target in the previous round but his preceding shooter hit the target, X hit the target in that round.
- if X hit the target in the previous round but his preceding shooter missed the target, X hit the target in that round.
- if X missed the target in the previous round and his preceding shooter also missed the target, X missed the target in that round.

Further, it is known that at least one person hit the target in the competition.

Q6. DIRECTIONS *for question 6:* Select the correct alternative from the given choices.

How many times would A have hit the target after 35 rounds?

a) **10**

b) **15**

c) **20**

d) **Cannot be determined**

You did not answer this question Show Correct Answer

Time spent / Accuracy Analysis

Time taken by you to answer this question	**0**
Avg. time spent on this question by all students	**81**
Difficulty Level	**D**
Avg. time spent on this question by students who got this question right	**112**
% of students who attempted this question	**12.31**
% of students who got the question right of those who attempted	**21.74**

Video Solution

Text Solution

Assume that all the three of them hit the target in the first round.
In the second round, A would have missed the target, B would have hit and C would have missed.
In the third round, A would have missed, B and C would have hit.
In the fourth round, A would have hit, B would have missed and C would have hit.
In the fifth round, A and B would have missed and C would have hit.
In the sixth round, A and B would have hit and C would have missed.
In the seventh round, A would have hit and B and C would have missed.
In the eighth round, all the three of them would have hit the target again.
Hence, the cycle will repeat after every seven rounds.
Further, there are only seven possibilities for hits and misses for the three persons (since at least one person hit the target in the competition). (Think of hits and misses in each round as a 3 digit binary number. There will only be 8 possibilities – from 000 to 111 – of which 000 is not possible as this will result is no person hitting the target in the entire competition)
All these seven possibilities are covered in the above seven cases.
Hence, the competition must have proceeded in the above mentioned pattern starting from any round.
The rounds in which each person hit and missed in given in the following table, starting from the nth round (1 represents a hit and 0 represents a miss):

	n	n + 1	n + 2	n + 3	n + 4	n + 5	n + 6
A	1	0	0	1	0	1	1
B	1	1	1	0	0	1	0
C	1	0	1	1	1	0	0

Every 7 rounds, each person would have hit the target exactly 4 times.
Hence, after 35 rounds, A would have hit the target 5 ×4 = 20 times. Choice (C)

undefined

DIRECTIONS *for questions 5 to 8:* Answer the questions on the basis of the information given below.

Three persons, A, B and C, participated in a shooting competition, comprising*n* rounds. In each round, the three persons shoot at a target, exactly once each, one after the other, in the same order as given above. All the *n* rounds were conducted one after the other without any break in between. During the competition, for any person, the person who shot at the target immediately before that person (not necessarily from the same round) is referred to as the preceding shooter of that person.

After the *n* rounds, they noticed that their hits and misses in each round, except the first round, all followed certain rules, which are given below.

For any person, say X, in any round,

- if X hit the target in the previous round and his preceding shooter also hit the target, X missed the target in that round.
- if X missed the target in the previous round but his preceding shooter hit the target, X hit the target in that round.
- if X hit the target in the previous round but his preceding shooter missed the target, X hit the target in that round.
- if X missed the target in the previous round and his preceding shooter also missed the target, X missed the target in that round.

Further, it is known that at least one person hit the target in the competition.

Q7. DIRECTIONS *for questions 7 and 8:* Type in your answer in the input box provided below the question.

If in the third round C is the only person to have hit the target, how many times would the target have been hit in all in the first seventeen rounds?

You did not answer this question Show Correct Answer

Time spent / Accuracy Analysis

Time taken by you to answer this question	**0**
Avg. time spent on this question by all students	**125**
Difficulty Level	**D**
Avg. time spent on this question by students who got this question right	**213**
% of students who attempted this question	**11.28**
% of students who got the question right of those who attempted	**11.86**

Video Solution

Text Solution

Assume that all the three of them hit the target in the first round.
In the second round, A would have missed the target, B would have hit and C would have missed.
In the third round, A would have missed, B and C would have hit.
In the fourth round, A would have hit, B would have missed and C would have hit.
In the fifth round, A and B would have missed and C would have hit.
In the sixth round, A and B would have hit and C would have missed.
In the seventh round, A would have hit and B and C would have missed.
In the eighth round, all the three of them would have hit the target again.
Hence, the cycle will repeat after every seven rounds.
Further, there are only seven possibilities for hits and misses for the three persons (since at least one person hit the target in the competition). (Think of hits and misses in each round as a 3 digit binary number. There will only be 8 possibilities – from 000 to 111 – of which 000 is not possible as this will result is no person hitting the target in the entire competition)
All these seven possibilities are covered in the above seven cases.
Hence, the competition must have proceeded in the above mentioned pattern starting from any round.
The rounds in which each person hit and missed in given in the following table, starting from the nth round (1 represents a hit and 0 represents a miss):

	n	n + 1	n + 2	n + 3	n + 4	n + 5	n + 6
A	1	0	0	1	0	1	1
B	1	1	1	0	0	1	0
C	1	0	1	1	1	0	0

In the third round C is the only person to have hit the target. In the first round, A would be the only person to have missed the target.
Every seven rounds, the target would have been hit 12 times.
Hence, in the first fourteen rounds, the target would have been hit 24 times.
In the next three rounds, the target would have been hit five more times.
Hence, the total number of time the target would have been hit in the first 17 rounds = 29 Ans: (29)

undefined

DIRECTIONS *for questions 5 to 8:* Answer the questions on the basis of the information given below.

Three persons, A, B and C, participated in a shooting competition, comprising*n* rounds. In each round, the three persons shoot at a target, exactly once each, one after the other, in the same order as given above. All the *n* rounds were conducted

one after the other without any break in between. During the competition, for any person, the person who shot at the target immediately before that person (not necessarily from the same round) is referred to as the preceding shooter of that person.

After the *n* rounds, they noticed that their hits and misses in each round, except the first round, all followed certain rules, which are given below.

For any person, say X, in any round,

- if X hit the target in the previous round and his preceding shooter also hit the target, X missed the target in that round.
- if X missed the target in the previous round but his preceding shooter hit the target, X hit the target in that round.
- if X hit the target in the previous round but his preceding shooter missed the target, X hit the target in that round.
- if X missed the target in the previous round and his preceding shooter also missed the target, X missed the target in that round.

Further, it is known that at least one person hit the target in the competition.

Q8. DIRECTIONS *for questions 7 and 8:* Type in your answer in the input box provided below the question.

If after *n* rounds, C hit the target seven times, what is the maximum number of times A would have hit the target after *n* rounds?

You did not answer this question Show Correct Answer

Time spent / Accuracy Analysis

Time taken by you to answer this question	**0**
Avg. time spent on this question by all students	**64**
Difficulty Level	**D**
Avg. time spent on this question by students who got this question right	**80**
% of students who attempted this question	**10.75**
% of students who got the question right of those who attempted	**14.48**

Video Solution

Text Solution

Assume that all the three of them hit the target in the first round.
In the second round, A would have missed the target, B would have hit and C would have missed.
In the third round, A would have missed, B and C would have hit.
In the fourth round, A would have hit, B would have missed and C would have hit.
In the fifth round, A and B would have missed and C would have hit.
In the sixth round, A and B would have hit and C would have missed.
In the seventh round, A would have hit and B and C would have missed.
In the eighth round, all the three of them would have hit the target again.
Hence, the cycle will repeat after every seven rounds.
Further, there are only seven possibilities for hits and misses for the three persons (since at least one person hit the target in the competition). (Think of hits and misses in each round as a 3 digit binary number. There will only be 8 possibilities – from 000 to 111 – of which 000 is not possible as this will result is no person hitting the target in the entire competition)
All these seven possibilities are covered in the above seven cases.
Hence, the competition must have proceeded in the above mentioned pattern starting from any round.
The rounds in which each person hit and missed in given in the following table, starting from the nth round (1 represents a hit and 0 represents a miss):

	n	n + 1	n + 2	n + 3	n + 4	n + 5	n + 6
A	1	0	0	1	0	1	1
B	1	1	1	0	0	1	0
C	1	0	1	1	1	0	0

Given that C hit the target 7 times.
If the game started at n (in the table above), A would have hit the target for a maximum of 6 times. (Until the round in which C hit the target for the 7th time).
If the game started at n + 1, the game could have ended at n + 6. A would have hit the target for a maximum of 7 times.
If the game started at n + 2, the game could have ended at n + 6. A would have hit the target for a maximum of 7 times.
If the game started at n + 3, the game could have ended at n + 1. A would have hit the target for a maximum of 8 times.
If the game started at n + 4, the game must have ended at n + 2. A would have hit the target for a maximum of 7 times.
If the game started at n + 5, the game must have ended at n + 3. A would have hit the target for a maximum of 8 times.
If the game started at n + 6, the game must have ended at n + 3. A would have hit the target for a maximum of 7 times.
Hence, A could have hit the target for a maximum of 8 times. Ans: (8)

undefined

DIRECTIONS *for questions 9 to 12:* Answer the questions on the basis of the information given below.

Eight persons, A through H, were standing along a circular track, not necessarily in the same order, such that the distance along the track between any two persons standing adjacent to each other was exactly 1 km. At exactly 9:00 AM, all of them started walking along the track in the clockwise direction. However, four of them started walking at a speed of 1 km/h, while the other four started walking at a speed of 3 km/h.

The following information is known about their relative positions along the track at exactly 10:00 AM, as they were walking:

i. No two persons were at the same position.

ii. G was immediately behind D, while E was diametrically opposite C.

iii. B was not immediately behind H, while F was diametrically opposite A.

The following information is known about their relative positions along the track at exactly 11:00 AM, as they were walking:

1. Neither F nor B was either immediately ahead of or immediately behind H.

2. E was either immediately ahead of or immediately behind D.

Q9. DIRECTIONS *for questions 9 to 12:* Select the correct alternative from the given choices.

Who was immediately ahead of B at 9:00 AM?

- a) **H**
- b) **E**
- c) **C**
- d) **G**

You did not answer this question Show Correct Answer

Time spent / Accuracy Analysis

Time taken by you to answer this question	**105**
Avg. time spent on this question by all students	**545**
Difficulty Level	**D**
Avg. time spent on this question by students who got this question right	**634**
% of students who attempted this question	**15.86**
% of students who got the question right of those who attempted	**38.14**

Video Solution

Text Solution

Let 1 to 8 represent the positions around the circular track where the eight persons were standing at 9:00 AM.

At 10:00 AM, it is given that no two persons were standing at the same position.
Suppose, at 9:00 AM, the person at position 1 is walking at a speed of 1 kmph. At 10:00 AM, he would have move to position 2.
Consider the person at position 7 at 9:00 AM. If he walked at 3 kmph, he would also be at position 2 at 10:00 AM. This is not possible. Hence, this person must have walked at a speed of 1 kmph.
Similarly, we can see that the persons at positions 5 and 3 (at 9:00 AM) would also have walked at 1 kmph, while the persons at positions 2, 4, 6 and 8 would have walked at 3 kmph.
Hence, any two persons adjacent to each other walked at different speeds and it follows that any two persons opposite each other walked at the same speed.
Given that G was immediately behind D. Also, E was opposite C, while F was opposite A. Hence, E, C, F and A cannot be opposite either G or D.
Hence, B and H must be opposite G and D in any order. Also, B was not immediately behind H. Hence, H must be immediately ahead of B (as they are adjacent each other).
At 11:00 AM, H was not adjacent to B. This is possible only if H was walking at 1 kmph and B was walking at 3 kmph.
Since B was walking at 3 kmph, D must also be walking at 3 kmph. G must have been walking at 1 kmph.
The adjacent diagram provides the relative positions of G, D, B and H at 10:00 AM and 11:00 AM.

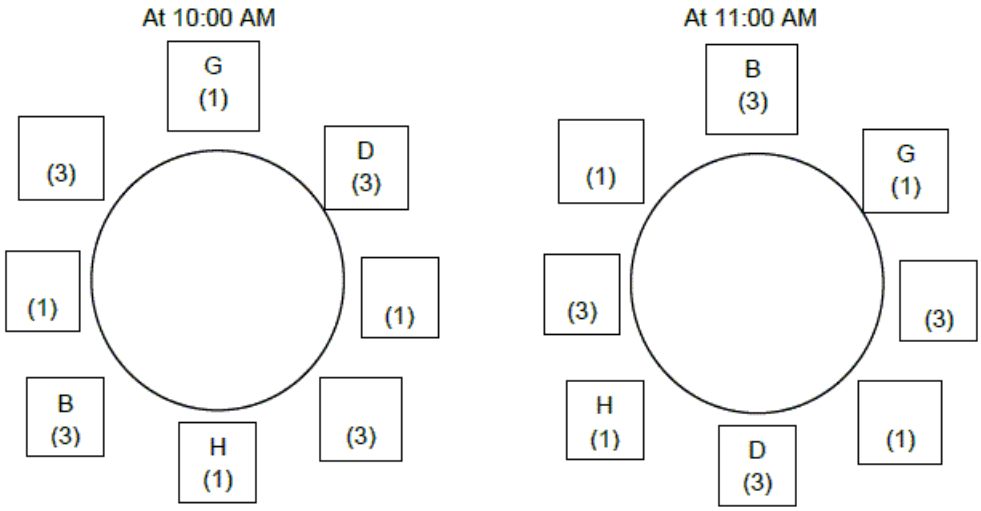

At 11:00 AM, E was adjacent to D. Hence, E must be immediately behind D. Also, C was opposite E at 10:00 AM and he will still be opposite E at 11:00 AM since they walk with same speed.
Hence, at 11:00 AM, C must be immediately behind B.
At 11:00 AM, F was not adjacent H. Hence, F must be immediately behind E and A must be opposite F. The adjacent diagram provides their relative positions at 11:00 AM:

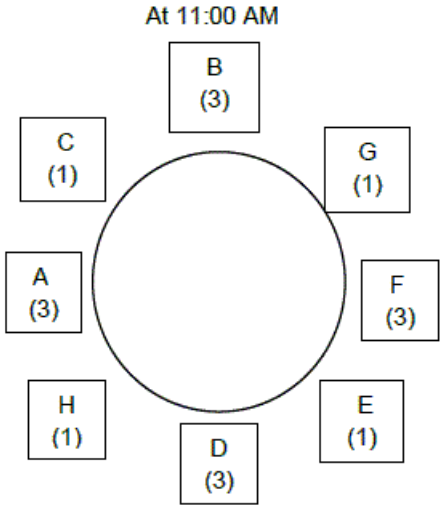

H was immediately ahead of B at 9:00 AM. Choice (A)

undefined

DIRECTIONS *for questions 9 to 12:* Answer the questions on the basis of the information given below.

Eight persons, A through H, were standing along a circular track, not necessarily in the same order, such that the distance along the track between any two persons standing adjacent to each other was exactly 1 km. At exactly 9:00 AM, all of them started walking along the track in the clockwise direction. However, four of them started walking at a speed of 1 km/h, while the other four started walking at a speed of 3 km/h.

The following information is known about their relative positions along the track at exactly 10:00 AM, as they were walking:

i. No two persons were at the same position.

ii. G was immediately behind D, while E was diametrically opposite C.

iii. B was not immediately behind H, while F was diametrically opposite A.

The following information is known about their relative positions along the track at exactly 11:00 AM, as they were walking:

1. Neither F nor B was either immediately ahead of or immediately behind H.

2. E was either immediately ahead of or immediately behind D.

Q10. DIRECTIONS *for questions 9 to 12:* Select the correct alternative from the given choices.

At 10:00 AM, who was immediately behind E?

- a) **A**
- b) **B**
- c) **D**
- d) **F**

You did not answer this question Show Correct Answer

Time spent / Accuracy Analysis

Time taken by you to answer this question	**0**
Avg. time spent on this question by all students	**66**
Difficulty Level	**D**
Avg. time spent on this question by students who got this question right	**64**
% of students who attempted this question	**16.57**
% of students who got the question right of those who attempted	**48.71**

Video Solution

Text Solution

Let 1 to 8 represent the positions around the circular track where the eight persons were standing at 9:00 AM.
At 10:00 AM, it is given that no two persons were standing at the same position.
Suppose, at 9:00 AM, the person at position 1 is walking at a speed of 1 kmph. At 10:00 AM, he would have move to position 2.
Consider the person at position 7 at 9:00 AM. If he walked at 3 kmph, he would also be at position 2 at 10:00 AM. This is not possible. Hence, this person must have walked at a speed of 1 kmph.
Similarly, we can see that the persons at positions 5 and 3 (at 9:00 AM) would also have walked at 1 kmph, while the persons at positions 2, 4, 6 and 8 would have walked at 3 kmph.
Hence, any two persons adjacent to each other walked at different speeds and it follows that any two persons opposite each other walked at the same speed.
Given that G was immediately behind D. Also, E was opposite C, while F was opposite A. Hence, E, C, F and A cannot be opposite either G or D.
Hence, B and H must be opposite G and D in any order. Also, B was not immediately behind H. Hence, H must be immediately ahead of B (as they are adjacent each other).
At 11:00 AM, H was not adjacent to B. This is possible only if H was walking at 1 kmph and B was walking at 3 kmph.
Since B was walking at 3 kmph, D must also be walking at 3 kmph. G must have been walking at 1 kmph.
The adjacent diagram provides the relative positions of G, D, B and H at 10:00 AM and 11:00 AM.

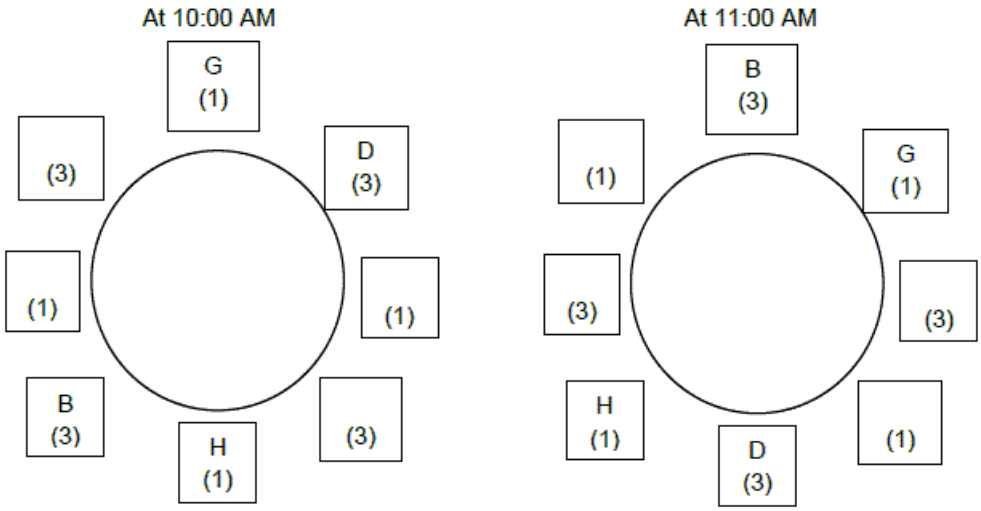

At 11:00 AM, E was adjacent to D. Hence, E must be immediately behind D. Also, C was opposite E at 10:00 AM and he will still be opposite E at 11:00 AM since they walk with same speed.
Hence, at 11:00 AM, C must be immediately behind B.
At 11:00 AM, F was not adjacent H. Hence, F must be immediately behind E and A must be opposite F. The adjacent diagram provides their relative positions at 11:00 AM:

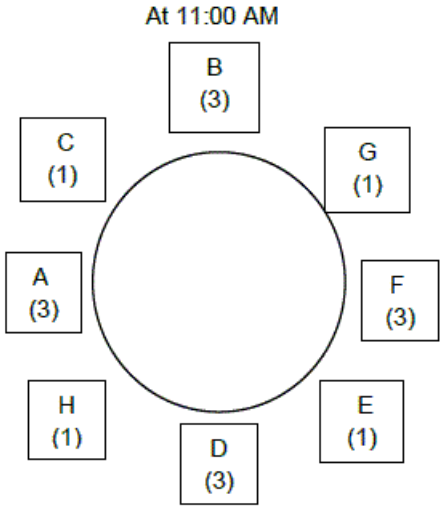

At 10:00 AM, D was immediately behind of E. Choice (C)

undefined

DIRECTIONS *for questions 9 to 12:* Answer the questions on the basis of the information given below.

Eight persons, A through H, were standing along a circular track, not necessarily in the same order, such that the distance along the track between any two persons standing adjacent to each other was exactly 1 km. At exactly 9:00 AM, all of them started walking along the track in the clockwise direction. However, four of them started walking at a speed of 1 km/h, while the other four started walking at a speed of 3 km/h.

The following information is known about their relative positions along the track at exactly 10:00 AM, as they were walking:

i. No two persons were at the same position.

ii. G was immediately behind D, while E was diametrically opposite C.

iii. B was not immediately behind H, while F was diametrically opposite A.

The following information is known about their relative positions along the track at exactly 11:00 AM, as they were walking:

1. Neither F nor B was either immediately ahead of or immediately behind H.

2. E was either immediately ahead of or immediately behind D.

Q11. DIRECTIONS *for questions 9 to 12:* Select the correct alternative from the given choices.

At 12 noon, who was immediately ahead of A?

- a) **G**
- b) **C**
- c) **H**
- d) **D**

You did not answer this question Show Correct Answer

Time spent / Accuracy Analysis

Time taken by you to answer this question	**0**
Avg. time spent on this question by all students	**74**
Difficulty Level	**D**
Avg. time spent on this question by students who got this question right	**75**
% of students who attempted this question	**9.98**
% of students who got the question right of those who attempted	**37.88**

Video Solution

Text Solution

Let 1 to 8 represent the positions around the circular track where the eight persons were standing at 9:00 AM.
At 10:00 AM, it is given that no two persons were standing at the same position.
Suppose, at 9:00 AM, the person at position 1 is walking at a speed of 1 kmph. At 10:00 AM, he would have move to position 2.
Consider the person at position 7 at 9:00 AM. If he walked at 3 kmph, he would also be at position 2 at 10:00 AM. This is not possible. Hence, this person must have walked at a speed of 1 kmph.
Similarly, we can see that the persons at positions 5 and 3 (at 9:00 AM) would also have walked at 1 kmph, while the persons at positions 2, 4, 6 and 8 would have walked at 3 kmph.
Hence, any two persons adjacent to each other walked at different speeds and it follows that any two persons opposite each other walked at the same speed.
Given that G was immediately behind D. Also, E was opposite C, while F was opposite A. Hence, E, C, F and A cannot be opposite either G or D.
Hence, B and H must be opposite G and D in any order. Also, B was not immediately behind H. Hence, H must be immediately ahead of B (as they are adjacent each other).
At 11:00 AM, H was not adjacent to B. This is possible only if H was walking at 1 kmph and B was walking at 3 kmph.
Since B was walking at 3 kmph, D must also be walking at 3 kmph. G must have been walking at 1 kmph.
The adjacent diagram provides the relative positions of G, D, B and H at 10:00 AM and 11:00 AM.

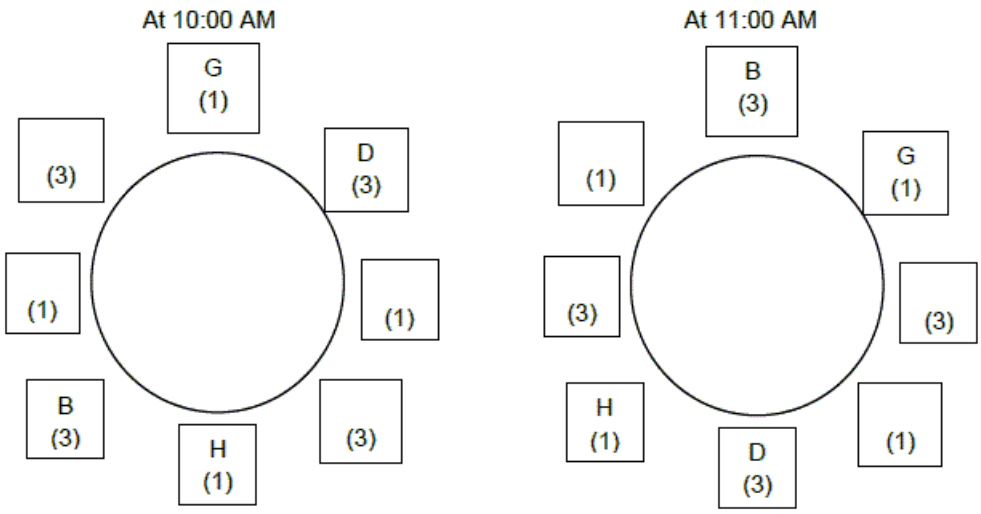

At 11:00 AM, E was adjacent to D. Hence, E must be immediately behind D. Also, C was opposite E at 10:00 AM and he will still be opposite E at 11:00 AM since they walk with same speed.
Hence, at 11:00 AM, C must be immediately behind B.
At 11:00 AM, F was not adjacent H. Hence, F must be immediately behind E and A must be opposite F. The adjacent diagram provides their relative positions at 11:00 AM:

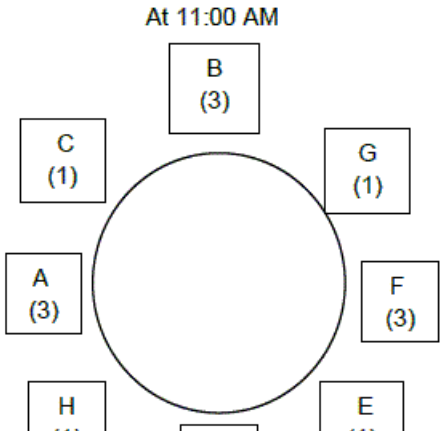

At 12 noon, G was immediately ahead of A. Choice (A)

undefined

DIRECTIONS *for questions 9 to 12:* Answer the questions on the basis of the information given below.

Eight persons, A through H, were standing along a circular track, not necessarily in the same order, such that the distance along the track between any two persons standing adjacent to each other was exactly 1 km. At exactly 9:00 AM, all of them started walking along the track in the clockwise direction. However, four of them started walking at a speed of 1 km/h, while the other four started walking at a speed of 3 km/h.

The following information is known about their relative positions along the track at exactly 10:00 AM, as they were walking:

i. No two persons were at the same position.

ii. G was immediately behind D, while E was diametrically opposite C.

iii. B was not immediately behind H, while F was diametrically opposite A.

The following information is known about their relative positions along the track at exactly 11:00 AM, as they were walking:

1. Neither F nor B was either immediately ahead of or immediately behind H.

2. E was either immediately ahead of or immediately behind D.

Q12. DIRECTIONS *for questions 9 to 12:* Select the correct alternative from the given choices.

At which of the following times will C be immediately ahead of B?

- a) **3:00 PM**
- b) **1:00 PM**
- c) **4:00 PM**
- d) **2:00 PM**

You did not answer this question Show Correct Answer

Time spent / Accuracy Analysis

Time taken by you to answer this question	**0**
Avg. time spent on this question by all students	**73**
Difficulty Level	**D**
Avg. time spent on this question by students who got this question right	**83**

Time spent / Accuracy Analysis

% of students who attempted this question	**7.68**
% of students who got the question right of those who attempted	**37.96**

Video Solution

Text Solution

Let 1 to 8 represent the positions around the circular track where the eight persons were standing at 9:00 AM.
At 10:00 AM, it is given that no two persons were standing at the same position.
Suppose, at 9:00 AM, the person at position 1 is walking at a speed of 1 kmph. At 10:00 AM, he would have move to position 2.
Consider the person at position 7 at 9:00 AM. If he walked at 3 kmph, he would also be at position 2 at 10:00 AM. This is not possible. Hence, this person must have walked at a speed of 1 kmph.
Similarly, we can see that the persons at positions 5 and 3 (at 9:00 AM) would also have walked at 1 kmph, while the persons at positions 2, 4, 6 and 8 would have walked at 3 kmph.
Hence, any two persons adjacent to each other walked at different speeds and it follows that any two persons opposite each other walked at the same speed.
Given that G was immediately behind D. Also, E was opposite C, while F was opposite A. Hence, E, C, F and A cannot be opposite either G or D.
Hence, B and H must be opposite G and D in any order. Also, B was not immediately behind H. Hence, H must be immediately ahead of B (as they are adjacent each other).
At 11:00 AM, H was not adjacent to B. This is possible only if H was walking at 1 kmph and B was walking at 3 kmph.
Since B was walking at 3 kmph, D must also be walking at 3 kmph. G must have been walking at 1 kmph.
The adjacent diagram provides the relative positions of G, D, B and H at 10:00 AM and 11:00 AM.

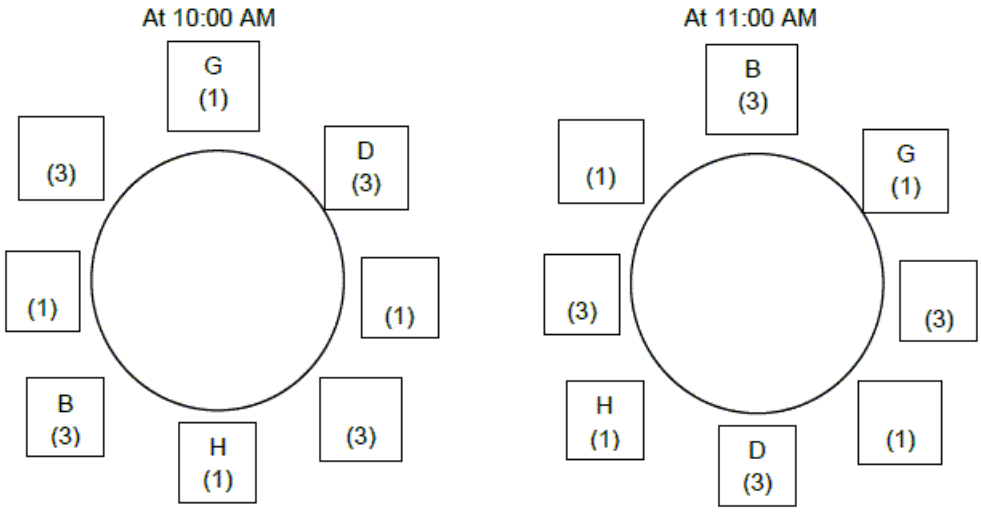

At 11:00 AM, E was adjacent to D. Hence, E must be immediately behind D. Also, C was opposite E at 10:00 AM and he will still be opposite E at 11:00 AM since they walk with same speed.
Hence, at 11:00 AM, C must be immediately behind B.
At 11:00 AM, F was not adjacent H. Hence, F must be immediately behind E and A must be opposite F. The adjacent diagram provides their relative positions at 11:00 AM:

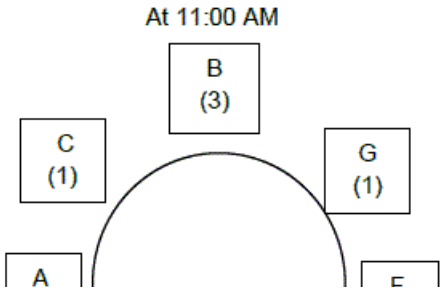

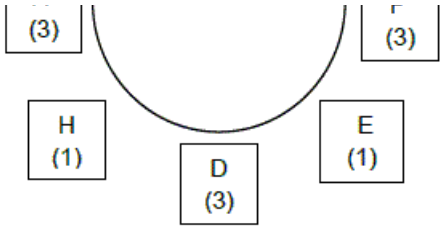

C will be immediately ahead of B at 2:00 PM. Choice (D)

undefined

DIRECTIONS *for questions 13 to 16:* Answer the questions on the basis of the information given below.

Kiran, an eccentric billionaire, hired three Private Investigators (PIs), Sherlock, Feluda and Hercules, and independently asked each of them to track the activities of the other two PIs, during the same period, for exactly n days. As part of their respective assignments, Kiran asked each of them to record the number of days that each of the other two PIs sent any e-mail from their respective e-mail accounts during these n days.

After the n days, each of the threePIs provided their respective reports which included information only about the other two PIs.

The following is known about the information in their reports:

i. According to Sherlock's report, the number of days on which both of the other twoPIs sent e-mails was 50, while the number of days on which only Feluda sent e-mails was 34.

ii. According to Feluda's report, the number of days on which only Hercules sent e-mails was 34, while the number of days on which only Sherlock sent e-mails was 27.

iii. According to Hercules' report, the number of days on which both of the other twoPIs sent e-mails was 43, while the number of days on which only Sherlock sent e-mails was 29 and the number of days on which none of the other two sent e-mails was 21.

iv. At least one of the three persons sent an e-mail on each of the n days.

Q13. DIRECTIONS *for questions 13 and 14:* Type in your answer in the input box provided below the question.

What is the value of n?

You did not answer this question Show Correct Answer

Time spent / Accuracy Analysis

Time taken by you to answer this question	**147**
Avg. time spent on this question by all students	**366**
Difficulty Level	**M**
Avg. time spent on this question by students who got this question right	**548**
% of students who attempted this question	**19.53**
% of students who got the question right of those who attempted	**9.37**

Video Solution

Text Solution

Given that each person provided information about the other two persons.
Let the adjacent diagram represent the number of days that each person sent e-mails.
According to Sherlock, between Hercules and Feluda, only Feluda sent e-mails on 34 days.
Since Sherlock does not include about himself in his report, when he mentions that only Feluda sent an e-mail on 34 days, we can infer that Hercules did not send any e-mail on these 34 days.
Hence, on these 34 days, only Feluda could have sent OR Feluda and Sherlock both could have sent.

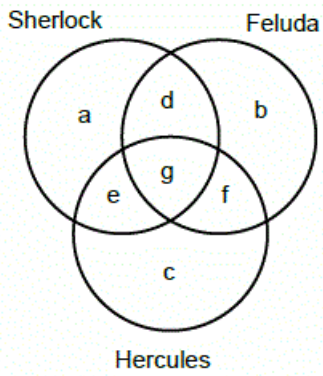

Hence, from the Venn diagram, b + d = 34 ---------- (1)
Similarly, according to Sherlock, the other two of them sent e-mails on 50 days.
Hence, f + g = 50 ---------- (2)
(as these 50 days includes the days on which Sherlock sent an e-mail and the days on which Sherlock did not send an e-mail).
From (ii), according to Feluda, only Hercules sent an e-mail on 34 days. Hence, c + f = 34. ------(3)

From (ii), according to Feluda, only Sherlock sent an e-mail on 27 days. Hence, a + d = 27. ------(4)
From (iii), according to Hercules, the other two of them both sent e-mails on 43 days.
Hence, d + g = 43.---------- (5)
From (iii), according to Hercules, only Sherlock sent e-mails on 29 days. Hence, a + e = 29. -------- (6)
From (iii), according to Hercules, Feluda and Sherlock both did not send any mails on 21 days.
From (iv), on each day, at least one person sent a mail. Hence, on these 21 days, only Hercules must have sent e-mails.
Therefore, c = 21.
From (3), f = 13.
From (2), g = 37.
From (5), d = 6.
From (1), b = 28.
From (4), a = 21.
From (6), e = 8.

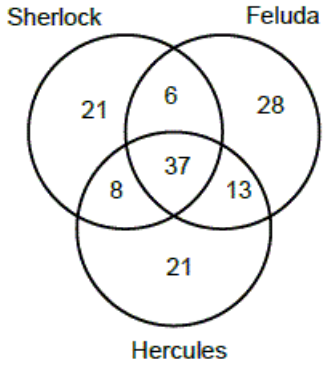

The adjacent Venn diagram provides the number of days that each person sent e-mails.

The value of n = 21 + 28 + 21 + 6 + 8 + 13 + 37 = 134 Ans: (134)

undefined

DIRECTIONS *for questions 13 to 16:* Answer the questions on the basis of the information given below.

Kiran, an eccentric billionaire, hired three Private Investigators (PIs), Sherlock, Feluda and Hercules, and independently asked each of them to track the activities of the other two PIs, during the same period, for exactly n days. As part of their respective assignments, Kiran asked each of them to record the number of days that each of the other two PIs sent any e-mail from their respective e-mail accounts during these n days.

After the n days, each of the threePIs provided their respective reports which included information only about the other two PIs.

The following is known about the information in their reports:

i. According to Sherlock's report, the number of days on which both of the other twoPIs sent e-mails was 50, while the number of days on which only Feluda sent e-mails was 34.

ii. According to Feluda's report, the number of days on which only Hercules sent e-mails was 34, while the number of days on which only Sherlock sent e-mails was 27.

iii. According to Hercules' report, the number of days on which both of the other twœPIs sent e-mails was 43, while the number of days on which only Sherlock sent e-mails was 29 and the number of days on which none of the other two sent e-mails was 21.

iv. At least one of the three persons sent an e-mail on each of the n days.

Q14. DIRECTIONS *for questions 13 and 14:* Type in your answer in the input box provided below the question.

On how many days during the given period did both Sherlock and Feluda send e-mails but Hercules did not?

You did not answer this question Show Correct Answer

Time spent / Accuracy Analysis

Time taken by you to answer this question	**0**
Avg. time spent on this question by all students	**97**
Difficulty Level	**M**
Avg. time spent on this question by students who got this question right	**75**
% of students who attempted this question	**16.28**
% of students who got the question right of those who attempted	**9.44**

Video Solution

Text Solution

Given that each person provided information about the other two persons.
Let the adjacent diagram represent the number of days that each person sent e-mails.
According to Sherlock, between Hercules and Feluda, only Feluda sent e-mails on 34 days.
Since Sherlock does not include about himself in his report, when he mentions that only Feluda sent an e-mail on 34 days, we can infer that Hercules did not send any e-mail on these 34 days.
Hence, on these 34 days, only Feluda could have sent OR Feluda and Sherlock both could have sent.

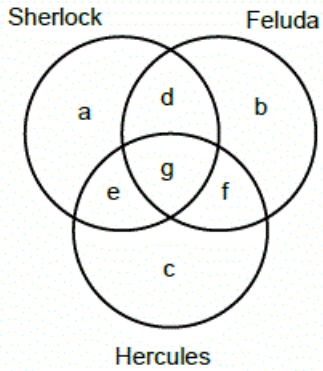

Hence, from the Venn diagram, b + d = 34 ---------- (1)
Similarly, according to Sherlock, the other two of them sent e-mails on 50 days.
Hence, f + g = 50 ---------- (2)
(as these 50 days includes the days on which Sherlock sent an e-mail and the days on which Sherlock did not send an e-mail).
From (ii), according to Feluda, only Hercules sent an e-mail on 34 days. Hence, c + f = 34. ------(3)

From (ii), according to Feluda, only Sherlock sent an e-mail on 27 days. Hence, a + d = 27. ------(4)
From (iii), according to Hercules, the other two of them both sent e-mails on 43 days.
Hence, d + g = 43.---------- (5)
From (iii), according to Hercules, only Sherlock sent e-mails on 29 days. Hence, a + e = 29. -------- (6)
From (iii), according to Hercules, Feluda and Sherlock both did not send any mails on 21 days.
From (iv), on each day, at least one person sent a mail. Hence, on these 21 days, only Hercules must have sent e-mails.
Therefore, c = 21.
From (3), f = 13.
From (2), g = 37.
From (5), d = 6.
From (1), b = 28.
From (4), a = 21.
From (6), e = 8.

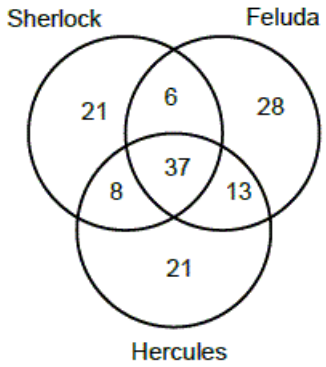

The adjacent Venn diagram provides the number of days that each person sent e-mails.

On 6 days (d) during the given period both Sherlock and Feluda sent e-mails but Hercules did not. Ans: (6)

undefined

DIRECTIONS *for questions 13 to 16:* Answer the questions on the basis of the information given below.

Kiran, an eccentric billionaire, hired three Private Investigators (PIs), Sherlock, Feluda and Hercules, and independently asked each of them to track the activities of the other two PIs, during the same period, for exactly n days. As part of their respective assignments, Kiran asked each of them to record the number of days that each of the other two PIs sent any e-mail from their respective e-mail accounts during these n days.

After the n days, each of the three PIs provided their respective reports which included information only about the other two PIs.

The following is known about the information in their reports:

i. According to Sherlock's report, the number of days on which both of the other two PIs sent e-mails was 50, while the number of days on which only Feluda sent e-mails was 34.

ii. According to Feluda's report, the number of days on which only Hercules sent e-mails was 34, while the number of days on which only Sherlock sent e-mails was 27.

iii. According to Hercules' report, the number of days on which both of the other twœPIs sent e-mails was 43, while the number of days on which only Sherlock sent e-mails was 29 and the number of days on which none of the other two sent e-mails was 21.

iv. At least one of the three persons sent an e-mail on each of the n days.

Q15. DIRECTIONS *for questions 15 and 16:* Select the correct alternative from the given choices.

On how many days during the given period did Hercules send e-mails but Feluda did not?

- a) **29**
- b) **34**
- c) **27**
- d) **21**

You did not answer this question Show Correct Answer

Time spent / Accuracy Analysis

Time taken by you to answer this question	**0**
Avg. time spent on this question by all students	**75**
Difficulty Level	**M**
Avg. time spent on this question by students who got this question right	**70**
% of students who attempted this question	**11.08**
% of students who got the question right of those who attempted	**24.07**

Video Solution

Text Solution

Given that each person provided information about the other two persons.
Let the adjacent diagram represent the number of days that each person sent e-mails.
According to Sherlock, between Hercules and Feluda, only Feluda sent e-mails on 34 days.
Since Sherlock does not include about himself in his report, when he mentions that only Feluda sent an e-mail on 34 days, we can infer that Hercules did not send any e-mail on these 34 days.
Hence, on these 34 days, only Feluda could have sent OR Feluda and Sherlock both could have sent.
Hence, from the Venn diagram, b + d = 34 ---------- (1)

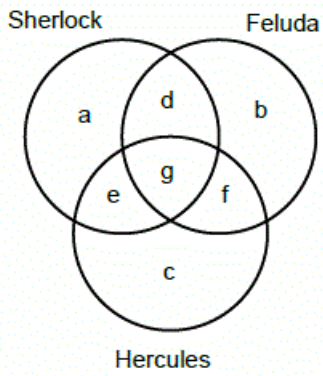

Similarly, according to Sherlock, the other two of them sent e-mails on 50 days.
Hence, f + g = 50 ---------- (2)
(as these 50 days includes the days on which Sherlock sent an e-mail and the days on which Sherlock did not send an e-mail).
From (ii), according to Feluda, only Hercules sent an e-mail on 34 days. Hence, c + f = 34. ------(3)

From (ii), according to Feluda, only Sherlock sent an e-mail on 27 days. Hence, a + d = 27. ------(4)
From (iii), according to Hercules, the other two of them both sent e-mails on 43 days.
Hence, d + g = 43.---------- (5)
From (iii), according to Hercules, only Sherlock sent e-mails on 29 days. Hence, a + e = 29. -------- (6)
From (iii), according to Hercules, Feluda and Sherlock both did not send any mails on 21 days.
From (iv), on each day, at least one person sent a mail. Hence, on these 21 days, only Hercules must have sent e-mails.
Therefore, c = 21.
From (3), f = 13.
From (2), g = 37.
From (5), d = 6.
From (1), b = 28.
From (4), a = 21.
From (6), e = 8.

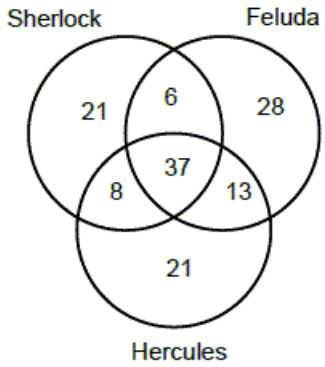

The adjacent Venn diagram provides the number of days that each person sent e-mails.

The number of days in which Hercules sent e-mails but Feluda did not = e + c = 29
Choice (A)

undefined

DIRECTIONS *for questions 13 to 16:* Answer the questions on the basis of the information given below.

Kiran, an eccentric billionaire, hired three Private Investigators (PIs), Sherlock, Feluda and Hercules, and independently asked each of them to track the activities of the other two PIs, during the same period, for exactly n days. As part of their respective assignments, Kiran asked each of them to record the number of days that each of the other two PIs sent any e-mail from their respective e-mail accounts during these n days.

After the n days, each of the three PIs provided their respective reports which included information only about the other two PIs.

The following is known about the information in their reports:

i. According to Sherlock's report, the number of days on which both of the other two PIs sent e-mails was 50, while the number of days on which only Feluda sent e-mails was 34.

ii. According to Feluda's report, the number of days on which only Hercules sent e-mails was 34, while the number of days on which only Sherlock sent e-mails was 27.

iii. According to Hercules' report, the number of days on which both of the other twœPIs sent e-mails was 43, while the number of days on which only Sherlock sent e-mails was 29 and the number of days on which none of the other two sent e-mails was 21.

iv. At least one of the three persons sent an e-mail on each of the n days.

Q16. DIRECTIONS *for questions 15 and 16:* Select the correct alternative from the given choices.

What is the maximum number of consecutive days during the given period on which Hercules could have sent an e-mail?

- a) **77**
- b) **78**
- c) **79**
- d) **81**

You did not answer this question Show Correct Answer

Time spent / Accuracy Analysis

Time taken by you to answer this question	**0**
Avg. time spent on this question by all students	**66**
Difficulty Level	**M**
Avg. time spent on this question by students who got this question right	**67**
% of students who attempted this question	**5.62**
% of students who got the question right of those who attempted	**43.2**

Video Solution

Text Solution

Given that each person provided information about the other two persons.
Let the adjacent diagram represent the number of days that each person sent e-mails.
According to Sherlock, between Hercules and Feluda, only Feluda sent e-mails on 34 days.
Since Sherlock does not include about himself in his report, when he mentions that only Feluda sent an e-mail on 34 days, we can infer that Hercules did not send any e-mail on these 34 days.
Hence, on these 34 days, only Feluda could have sent OR Feluda and Sherlock both could have sent.

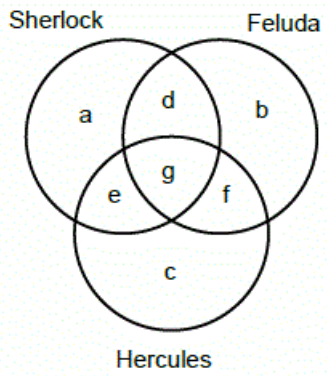

Hence, from the Venn diagram, b + d = 34 ---------- (1)
Similarly, according to Sherlock, the other two of them sent e-mails on 50 days.
Hence, f + g = 50 ---------- (2)
(as these 50 days includes the days on which Sherlock sent an e-mail and the days on which Sherlock did not send an e-mail).
From (ii), according to Feluda, only Hercules sent an e-mail on 34 days. Hence, c + f = 34. ------(3)

From (ii), according to Feluda, only Sherlock sent an e-mail on 27 days. Hence, a + d = 27. ------(4)
From (iii), according to Hercules, the other two of them both sent e-mails on 43 days.
Hence, d + g = 43.---------- (5)
From (iii), according to Hercules, only Sherlock sent e-mails on 29 days. Hence, a + e = 29. -------- (6)
From (iii), according to Hercules, Feluda and Sherlock both did not send any mails on 21 days.
From (iv), on each day, at least one person sent a mail. Hence, on these 21 days, only Hercules must have sent e-mails.
Therefore, c = 21.
From (3), f = 13.
From (2), g = 37.
From (5), d = 6.
From (1), b = 28.
From (4), a = 21.
From (6), e = 8.

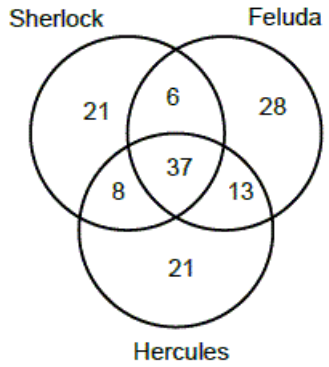

The adjacent Venn diagram provides the number of days that each person sent e-mails.

There are no conditions on the order of the days in which the three persons sent e-mails.
Hercules sent e-mails on 21 + 13 + 37 + 8 = 79 days during the given period. All these 79 days could have been consecutive. Hence, the maximum number of consecutive days that Hercules could have sent e-mails is 79. Choice (C)

undefined

DIRECTIONS *for questions 17 to 20:* Answer the questions on the basis of the information given below.

Exactly seven persons, A through G, were waiting in a queue outside a shop to buy different items. Each person wanted to buy a different item among Soap, Toothpaste, Pen, Scissors, Oil, Bread and Milk.

It is also known that

i. the person who wanted to buy Soap was standing two places behind F, while the person who wanted to buy Scissors was standing adjacent to B.

ii. the person who wanted to buy Oil was not standing immediately next to the person who wanted to buy Milk.

iii. C, who wanted to buy Toothpaste, was standing four places in front of the person who wanted to buy Milk and neither of the two were standing at any end.

iv. neither D nor G were standing at any end and D did not want to buy Scissors.

v. A, who did not want to buy Milk, was standing immediately behind the person who wanted to buy Scissors.

Q17. D**IRECTIONS** *for questions 17 to 20:* Select the correct alternative from the given choices.

Who wanted to buy Oil?

- a) **B**
- b) **G**
- c) **D** **Your answer is incorrect**
- d) **F**

Show Correct Answer

Time spent / Accuracy Analysis

Time taken by you to answer this question	**1730**
Avg. time spent on this question by all students	**694**
Difficulty Level	**E**
Avg. time spent on this question by students who got this question right	**695**
% of students who attempted this question	**53.87**
% of students who got the question right of those who attempted	**84.44**

Video Solution

Text Solution

From (iii), C was standing four places in front of the person who wanted to buy Milk and neither of them were standing at any end. Hence, C cannot be in the first position. C cannot be in the third position because the person who wanted to buy Milk cannot be last. C cannot be anywhere behind the third position because the person who wanted to buy Milk will not fit in the queue.
Hence, C must be in the second position and the person who wanted to buy Milk must be in the sixth position.
From (v), A was standing immediately behind the person who wanted to buy Scissors. From (i), B was also standing adjacent to this person. Hence, B must be immediately in front of the person who wanted to buy Scissors.
Hence, the three persons – B, the person who wanted to buy Scissors and A – must all be standing one immediately behind the other in the same order.
B cannot be in the first position because the person who wanted to buy Scissors cannot be in the second position (as C, who wanted to purchase Toothpaste, was in the second position).
B cannot be second as well (since C is in the second position).
B can be in the third position.
B cannot be in the fourth position because A must be in the sixth position but from (v), A did not want to buy Milk. B cannot be in the fifth position because the person who wanted to buy Scissors cannot be in the sixth position.
Hence, B must be in the third position. The person who wanted to buy Scissors must be in the fourth position and A must be in the fifth position.
From (iv), D and G are not at any ends. Hence, D and G must be in fourth and sixth positions in any order. From (iv), D did not want to buy Scissors. Hence, G must be in the fourth position and D must be in the sixth position.
From (i), F must be in the first position and the person who wanted to buy Soap must be in the third position, i.e., B must have wanted to buy Soap.
From (ii), the person in fifth and seventh position would not have wanted to buy Oil. Hence, the person who wanted to buy Oil must be in the first position.
The persons in the fifth and seventh positions must have wanted to buy Bread and Pen in any order.

The following table presents the arrangement:

Position	Person	Item
1	F	Oil
2	C	Toothpaste
3	B	Soap
4	G	Scissors
5	A	Bread/Pen
6	D	Milk
7	E	Pen/Bread

F wanted to buy Oil. Choice (D)

undefined

DIRECTIONS *for questions 17 to 20:* Answer the questions on the basis of the information given below.

Exactly seven persons, A through G, were waiting in a queue outside a shop to buy different items. Each person wanted to buy a different item among Soap, Toothpaste, Pen, Scissors, Oil, Bread and Milk.

It is also known that

i. the person who wanted to buy Soap was standing two places behind F, while the person who wanted to buy Scissors was standing adjacent to B.

ii. the person who wanted to buy Oil was not standing immediately next to the person who wanted to buy Milk.

iii. C, who wanted to buy Toothpaste, was standing four places in front of the person who wanted to buy Milk and neither of the two were standing at any end.

iv. neither D nor G were standing at any end and D did not want to buy Scissors.

v. A, who did not want to buy Milk, was standing immediately behind the person who wanted to buy Scissors.

Q18.

DIRECTIONS *for questions 17 to 20:* Select the correct alternative from the given choices.

Who is standing immediately in front of the person who wanted to buy Milk?

a) **G**

b) **D**

c) **A**

d) **F**

You did not answer this question Show Correct Answer

Time spent / Accuracy Analysis

Time taken by you to answer this question	**77**
Avg. time spent on this question by all students	**42**
Difficulty Level	**E**
Avg. time spent on this question by students who got this question right	**34**
% of students who attempted this question	**53.41**
% of students who got the question right of those who attempted	**83.02**

Video Solution

Text Solution

From (iii), C was standing four places in front of the person who wanted to buy Milk and neither of them were standing at any end. Hence, C cannot be in the first position. C cannot be in the third position because the person who wanted to buy Milk cannot be last. C cannot be anywhere behind the third position because the person who wanted to buy Milk will not fit in the queue.
Hence, C must be in the second position and the person who wanted to buy Milk must be in the sixth position.
From (v), A was standing immediately behind the person who wanted to buy Scissors. From (i), B was also standing adjacent to this person. Hence, B must be immediately in front of the person who wanted to buy Scissors.
Hence, the three persons – B, the person who wanted to buy Scissors and A – must all be standing one immediately behind the other in the same order.
B cannot be in the first position because the person who wanted to buy Scissors cannot be in the second position (as C, who wanted to purchase Toothpaste, was in the second position).
B cannot be second as well (since C is in the second position).
B can be in the third position.
B cannot be in the fourth position because A must be in the sixth position but from (v), A did not want to buy Milk. B cannot be in the fifth position because the person who wanted to buy Scissors cannot be in the sixth position.
Hence, B must be in the third position. The person who wanted to buy Scissors must be in the fourth position and A must be in the fifth position.
From (iv), D and G are not at any ends. Hence, D and G must be in fourth and sixth positions in any order. From (iv), D did not want to buy Scissors. Hence, G must be in the fourth position and D must be in the sixth position.
From (i), F must be in the first position and the person who wanted to buy Soap must be in the third position, i.e., B must have wanted to buy Soap.
From (ii), the person in fifth and seventh position would not have wanted to buy Oil. Hence, the person who wanted to buy Oil must be in the first position.
The persons in the fifth and seventh positions must have wanted to buy Bread and Pen in any order.

The following table presents the arrangement:

Position	Person	Item
1	F	Oil
2	C	Toothpaste
3	B	Soap
4	G	Scissors
5	A	Bread/Pen
6	D	Milk
7	E	Pen/Bread

A was standing immediately in front of the person who wanted to buy Milk (i.e., D).

Choice (C)

undefined

DIRECTIONS *for questions 17 to 20:* Answer the questions on the basis of the information given below.

Exactly seven persons, A through G, were waiting in a queue outside a shop to buy different items. Each person wanted to buy a different item among Soap, Toothpaste, Pen, Scissors, Oil, Bread and Milk.

It is also known that

i. the person who wanted to buy Soap was standing two places behind F, while the person who wanted to buy Scissors was standing adjacent to B.

ii. the person who wanted to buy Oil was not standing immediately next to the person who wanted to buy Milk.

iii. C, who wanted to buy Toothpaste, was standing four places in front of the person who wanted to buy Milk and neither of the two were standing at any end.

iv. neither D nor G were standing at any end and D did not want to buy Scissors.

v. A, who did not want to buy Milk, was standing immediately behind the person who wanted to buy Scissors.

Q19.

DIRECTIONS *for questions 17 to 20:* Select the correct alternative from the given choices.

Which of the following items did the person who was standing immediately in front of G want to buy?

- a) **Toothpaste**
- b) **Soap** **Your answer is correct**
- c) **Bread**
- d) **Cannot be determined**

Time spent / Accuracy Analysis

Time taken by you to answer this question	**25**
Avg. time spent on this question by all students	**36**
Difficulty Level	**E**
Avg. time spent on this question by students who got this question right	**30**
% of students who attempted this question	**52.72**
% of students who got the question right of those who attempted	**75.53**

Video Solution

Text Solution

From (iii), C was standing four places in front of the person who wanted to buy Milk and neither of them were standing at any end. Hence, C cannot be in the first position. C cannot be in the third position because the person who wanted to buy Milk cannot be last. C cannot be anywhere behind the third position because the person who wanted to buy Milk will not fit in the queue.
Hence, C must be in the second position and the person who wanted to buy Milk must be in the sixth position.
From (v), A was standing immediately behind the person who wanted to buy Scissors. From (i), B was also standing adjacent to this person. Hence, B must be immediately in front of the person who wanted to buy Scissors.
Hence, the three persons – B, the person who wanted to buy Scissors and A – must all be standing one immediately behind the other in the same order.
B cannot be in the first position because the person who wanted to buy Scissors cannot be in the second position (as C, who wanted to purchase Toothpaste, was in the second position).
B cannot be second as well (since C is in the second position).
B can be in the third position.
B cannot be in the fourth position because A must be in the sixth position but from (v), A did not want to buy Milk. B cannot be in the fifth position because the person who wanted to buy Scissors cannot be in the sixth position.
Hence, B must be in the third position. The person who wanted to buy Scissors must be in the fourth position and A must be in the fifth position.
From (iv), D and G are not at any ends. Hence, D and G must be in fourth and sixth positions in any order. From (iv), D did not want to buy Scissors. Hence, G must be in the fourth position and D must be in the sixth position.
From (i), F must be in the first position and the person who wanted to buy Soap must be in the third position, i.e., B must have wanted to buy Soap.
From (ii), the person in fifth and seventh position would not have wanted to buy Oil. Hence, the person who wanted to buy Oil must be in the first position.
The persons in the fifth and seventh positions must have wanted to buy Bread and Pen in any order.

The following table presents the arrangement:

Position	Person	Item
1	F	Oil
2	C	Toothpaste
3	B	Soap
4	G	Scissors
5	A	Bread/Pen
6	D	Milk
7	E	Pen/Bread

The person who was standing immediately in front of G (i.e., B) wanted to buy Soap.
Choice (B)

undefined

DIRECTIONS *for questions 17 to 20:* Answer the questions on the basis of the information given below.

Exactly seven persons, A through G, were waiting in a queue outside a shop to buy different items. Each person wanted to buy a different item among Soap, Toothpaste, Pen, Scissors, Oil, Bread and Milk.

It is also known that

i. the person who wanted to buy Soap was standing two places behind F, while the person who wanted to buy Scissors was standing adjacent to B.

ii. the person who wanted to buy Oil was not standing immediately next to the person who wanted to buy Milk.

iii. C, who wanted to buy Toothpaste, was standing four places in front of the person who wanted to buy Milk and neither of the two were standing at any end.

iv. neither D nor G were standing at any end and D did not want to buy Scissors.

v. A, who did not want to buy Milk, was standing immediately behind the person who wanted to buy Scissors.

Q20.

DIRECTIONS *for questions 17 to 20:* Select the correct alternative from the given choices.

Which item did the person standing immediately behind D want to buy?

- a) **Pen**
- b) **Bread**
- c) **Milk**
- d) **Cannot be determined** **Your answer is correct**

Time spent / Accuracy Analysis

Time taken by you to answer this question	**26**
Avg. time spent on this question by all students	**37**
Difficulty Level	**E**
Avg. time spent on this question by students who got this question right	**36**
% of students who attempted this question	**50.7**
% of students who got the question right of those who attempted	**87.75**

Video Solution

Text Solution

From (iii), C was standing four places in front of the person who wanted to buy Milk and neither of them were standing at any end. Hence, C cannot be in the first position. C cannot be in the third position because the person who wanted to buy Milk cannot be last. C cannot be anywhere behind the third position because the person who wanted to buy Milk will not fit in the queue.
Hence, C must be in the second position and the person who wanted to buy Milk must be in the sixth position.
From (v), A was standing immediately behind the person who wanted to buy Scissors. From (i), B was also standing adjacent to this person. Hence, B must be immediately in front of the person who wanted to buy Scissors.
Hence, the three persons – B, the person who wanted to buy Scissors and A – must all be standing one immediately behind the other in the same order.
B cannot be in the first position because the person who wanted to buy Scissors cannot be in the second position (as C, who wanted to purchase Toothpaste, was in the second position).
B cannot be second as well (since C is in the second position).
B can be in the third position.
B cannot be in the fourth position because A must be in the sixth position but from (v), A did not want to buy Milk. B cannot be in the fifth position because the person who wanted to buy Scissors cannot be in the sixth position.
Hence, B must be in the third position. The person who wanted to buy Scissors must be in the fourth position and A must be in the fifth position.
From (iv), D and G are not at any ends. Hence, D and G must be in fourth and sixth positions in any order. From (iv), D did not want to buy Scissors. Hence, G must be in the fourth position and D must be in the sixth position.
From (i), F must be in the first position and the person who wanted to buy Soap must be in the third position, i.e., B must have wanted to buy Soap.
From (ii), the person in fifth and seventh position would not have wanted to buy Oil. Hence, the person who wanted to buy Oil must be in the first position.
The persons in the fifth and seventh positions must have wanted to buy Bread and Pen in any order.

The following table presents the arrangement:

Position	Person	Item
1	F	Oil
2	C	Toothpaste
3	B	Soap
4	G	Scissors
5	A	Bread/Pen
6	D	Milk
7	E	Pen/Bread

The person standing immediately behind D (i.e., E) wanted to buy either Pen or Bread.
The answer cannot be determined. Choice (D)

undefined

DIRECTIONS *for questions 21 to 24:* Answer the questions on the basis of the information given below.

In a country, the government wanted to introduce a new scheme for levying income tax on its citizens. It shortlisted four schemes − Scheme A, Scheme B, Scheme C and Scheme D − and wanted to implement one of the four schemes. The tax that a citizen has to pay under each of the four schemes depends on his/her annual income.

The four schemes are described below:

- **Scheme A**: Flat 12.5% tax on entire income irrespective of the income level.

- **Scheme B**: 5% on entire income for people earning up to USD 100,000; 7.5% tax on entire income for people earning more than USD 100,000 and up to USD 1,000,000 and 20% tax on entire income for people earning more than USD 1,000,000.

- **Scheme C**: 5% tax on entire income for people earning up to USD 500,000 and 20% tax on entire income for people earning more than USD 500,000.

- **Scheme D**: No tax for people earning up to USD 200,000; 10% tax on entire income for people earning more than USD 200,000 and up to USD 1,000,000 and 15% tax on entire income for people earning more than USD 1,000,000.

The government asked the citizens to vote for any one of the four schemes. All the citizens of the country voted exactly once and each citizen chose the scheme which will minimize the tax that he/she has to pay.

Q21. DIRECTIONS *for questions 21 to 24:* Select the correct alternative from the given choices.

If the number of citizens who voted for Scheme A, Scheme B, Scheme C and Scheme D are 20000, 50000, 70000 and 12000 respectively, how many citizens in the country have income at most USD 500,000?

a) **82000**

b) **62000**

c) **12000**

d) **Cannot be determined**

You did not answer this question Show Correct Answer

Time spent / Accuracy Analysis

Time taken by you to answer this question	**79**
Avg. time spent on this question by all students	**318**
Difficulty Level	**M**
Avg. time spent on this question by students who got this question right	**361**
% of students who attempted this question	**21.76**
% of students who got the question right of those who attempted	**45.21**

Video Solution

Text Solution

Since each citizen votes minimizing the tax that he has to pay, each citizen will choose a scheme based on his income level.
If a citizen earns up to USD 200,000, he will choose Scheme D as he does not have to pay tax according to that scheme (which is the least among all the four schemes).
If a citizen earns more than USD 200,000 and up to USD 500,000, he will vote for Scheme C as he has to pay only 5% tax.
If a citizen earns more than USD 500,000 and up to USD 1,000,000, he will choose Scheme B as he has to pay only 7.5% tax.
If a citizen earns more than USD 1,000,000, he will chose Scheme A as he has to pay only 12.5% tax.

From the given numbers, we can infer that the people who voted for Scheme D have incomes up to USD 200,000. Hence, 12000 people have income up to USD 200,000.
The 70000 people who voted for Scheme C have incomes more than USD 200,000 and up to USD 500,000.
The 50000 people who voted for Scheme B have incomes more than USD 500,000 and up to USD 1,000,000.
The 20000 people who voted for Scheme A have incomes more than USD 1,000,000.
Hence, there must be 12000 + 70000 = 82000 people in the country with incomes at most USD 500,000. Choice (A)

undefined

DIRECTIONS *for questions 21 to 24:* Answer the questions on the basis of the information given below.

In a country, the government wanted to introduce a new scheme for levying income tax on its citizens. It shortlisted four schemes − Scheme A, Scheme B, Scheme C and Scheme D − and wanted to implement one of the four schemes. The tax that a citizen has to pay under each of the four schemes depends on his/her annual income.

The four schemes are described below:

- **Scheme A**: Flat 12.5% tax on entire income irrespective of the income level.
- **Scheme B**: 5% on entire income for people earning up to USD 100,000; 7.5% tax on entire income for people earning more than USD 100,000 and up to USD 1,000,000 and 20% tax on entire income for people earning more than USD 1,000,000.
- **Scheme C**: 5% tax on entire income for people earning up to USD 500,000 and 20% tax on entire income for people earning more than USD 500,000.
- **Scheme D**: No tax for people earning up to USD 200,000; 10% tax on entire income for people earning more than USD 200,000 and up to USD 1,000,000 and 15% tax on entire income for people earning more than USD 1,000,000.

The government asked the citizens to vote for any one of the four schemes. All the citizens of the country voted exactly once and each citizen chose the scheme which will minimize the tax that he/she has to pay.

Q22. DIRECTIONS *for questions 21 to 24:* Select the correct alternative from the given choices.

If the number of citizens who voted for Scheme A, Scheme B, Scheme C and Scheme D are 15000, 25000, 30000 and 40000 respectively, how many citizens in the country earn more than USD 200,000 and at most USD 500,000?

a) **25000**

b) **30000**

c) **55000**

d) **70000**

You did not answer this question Show Correct Answer

Time spent / Accuracy Analysis

Time taken by you to answer this question	**26**
Avg. time spent on this question by all students	**109**
Difficulty Level	**M**
Avg. time spent on this question by students who got this question right	**104**
% of students who attempted this question	**17.74**
% of students who got the question right of those who attempted	**65.43**

Video Solution

Text Solution

Since each citizen votes minimizing the tax that he has to pay, each citizen will choose a scheme based on his income level.
If a citizen earns up to USD 200,000, he will choose Scheme D as he does not have to pay tax according to that scheme (which is the least among all the four schemes).
If a citizen earns more than USD 200,000 and up to USD 500,000, he will vote for Scheme C as he has to pay only 5% tax.
If a citizen earns more than USD 500,000 and up to USD 1,000,000, he will choose Scheme B as he has to pay only 7.5% tax.
If a citizen earns more than USD 1,000,000, he will chose Scheme A as he has to pay only 12.5% tax.

All the people who voted for Scheme C will have income more than USD 200,000 and up to USD 500,000.
There 30000 such people. Choice (B)

undefined

DIRECTIONS *for questions 21 to 24:* Answer the questions on the basis of the information given below.

In a country, the government wanted to introduce a new scheme for levying income tax on its citizens. It shortlisted four schemes − Scheme A, Scheme B, Scheme C and Scheme D − and wanted to implement one of the four schemes. The tax that a citizen has to pay under each of the four schemes depends on his/her annual income.

The four schemes are described below:

- **Scheme A**: Flat 12.5% tax on entire income irrespective of the income level.
- **Scheme B**: 5% on entire income for people earning up to USD 100,000; 7.5% tax on entire income for people earning more than USD 100,000 and up to USD 1,000,000 and 20% tax on entire income for people earning more than USD 1,000,000.
- **Scheme C**: 5% tax on entire income for people earning up to USD 500,000 and 20% tax on entire income for people earning more than USD 500,000.
- **Scheme D**: No tax for people earning up to USD 200,000; 10% tax on entire income for people earning more than USD 200,000 and up to USD 1,000,000 and 15% tax on entire income for people earning more than USD 1,000,000.

The government asked the citizens to vote for any one of the four schemes. All the citizens of the country voted exactly once and each citizen chose the scheme which will minimize the tax that he/she has to pay.

Q23. DIRECTIONS *for questions 21 to 24:* Select the correct alternative from the given choices.

If the number of citizens who voted for Scheme A, Scheme B, Scheme C and Scheme D are 20000, 40000, 12000 and 15000 respectively and the government implemented the scheme which received the highest number of votes, what will be the minimum total tax (in USD mn) that the government will collect from its citizens in an year?

- a) **2120**
- b) **3580**
- c) **5680**
- d) **6120**

You did not answer this question Show Correct Answer

Time spent / Accuracy Analysis

Time taken by you to answer this question	**0**
Avg. time spent on this question by all students	**234**
Difficulty Level	**D**
Avg. time spent on this question by students who got this question right	**278**
% of students who attempted this question	**7.23**
% of students who got the question right of those who attempted	**44.41**

Video Solution

Text Solution

Since each citizen votes minimizing the tax that he has to pay, each citizen will choose a scheme based on his income level.
If a citizen earns up to USD 200,000, he will choose Scheme D as he does not have to pay tax according to that scheme (which is the least among all the four schemes).
If a citizen earns more than USD 200,000 and up to USD 500,000, he will vote for Scheme C as he has to pay only 5% tax.
If a citizen earns more than USD 500,000 and up to USD 1,000,000, he will choose Scheme B as he has to pay only 7.5% tax.
If a citizen earns more than USD 1,000,000, he will chose Scheme A as he has to pay only 12.5% tax.

Since the scheme with the maximum number of votes was implemented, the government would have implemented Scheme B.
The 15000 people who voted for Scheme D can have minimum of income of 0. Hence, they need not have paid any tax.
The 12000 people who voted for Scheme C have minimum income of USD 200,000.
According to Scheme B, these persons have to pay 7.5% tax.
Minimum tax paid by all the persons = 12000 × 200000 × 7.5% = USD 180 mn.
The 40000 people who voted for Scheme B have minimum income of USD 500,000.
Minimum tax paid by these persons = 40000 × 500000 × 7.5% = USD 1500 mn.
The 20000 people who voted for Scheme A have minimum income of USD 1,000,000.
Minimum tax paid by these persons = 20000 × 1000000 × 20% = USD 4000 mn.
Minimum tax levied by government = USD 5680 mn Choice (C)

undefined

DIRECTIONS *for questions 21 to 24:* Answer the questions on the basis of the information given below.

In a country, the government wanted to introduce a new scheme for levying income tax on its citizens. It shortlisted four schemes − Scheme A, Scheme B, Scheme C and Scheme D − and wanted to implement one of the four schemes. The tax that a citizen has to pay under each of the four schemes depends on his/her annual income.

The four schemes are described below:

- **Scheme A**: Flat 12.5% tax on entire income irrespective of the income level.
- **Scheme B**: 5% on entire income for people earning up to USD 100,000; 7.5% tax on entire income for people earning more than USD 100,000 and up to USD 1,000,000 and 20% tax on entire income for people earning more than USD 1,000,000.
- **Scheme C**: 5% tax on entire income for people earning up to USD 500,000 and 20% tax on entire income for people earning more than USD 500,000.

- **Scheme D**: No tax for people earning up to USD 200,000; 10% tax on entire income for people earning more than USD 200,000 and up to USD 1,000,000 and 15% tax on entire income for people earning more than USD 1,000,000.

The government asked the citizens to vote for any one of the four schemes. All the citizens of the country voted exactly once and each citizen chose the scheme which will minimize the tax that he/she has to pay.

Q24. DIRECTIONS *for questions 21 to 24:* Select the correct alternative from the given choices.

The number of citizens who voted for Scheme A, Scheme B, Scheme C and Scheme D are 15000, 27000, 18000 and 25000 respectively and no citizen earned more than USD 1,200,000. If the government implemented the scheme which received the highest number of votes, which of the following can be the total tax (in USD bn) that the government will collect from its citizens in an year?

a) **4**

b) **5.9**

c) **6.9**

d) **7.9**

You did not answer this question Show Correct Answer

Time spent / Accuracy Analysis

Time taken by you to answer this question	**0**
Avg. time spent on this question by all students	**137**
Difficulty Level	**D**
Avg. time spent on this question by students who got this question right	**150**
% of students who attempted this question	**4.16**
% of students who got the question right of those who attempted	**37.24**

Video Solution

Text Solution

Since each citizen votes minimizing the tax that he has to pay, each citizen will choose a scheme based on his income level.
If a citizen earns up to USD 200,000, he will choose Scheme D as he does not have to pay tax according to that scheme (which is the least among all the four schemes).
If a citizen earns more than USD 200,000 and up to USD 500,000, he will vote for Scheme C as he has to pay only 5% tax.
If a citizen earns more than USD 500,000 and up to USD 1,000,000, he will choose Scheme B as he has to pay only 7.5% tax.
If a citizen earns more than USD 1,000,000, he will chose Scheme A as he has to pay only 12.5% tax.

From the number of votes, we can infer that there are 25000 people with incomes of up to USD 200,000.
There are 18000 people with incomes of more than USD 200,000 and up to USD 500,000.
There are 27000 people with incomes of more than USD 500,000 and up to USD 1,000,000.
There are 15000 people with incomes of more than USD 1,000,000 and up to USD 1,200,000.
Under Scheme B, the minimum tax levied = $(18000 \times 200000 + 27000 \times 500000) \times 7.5\% + 15000 \times 1000000 \times 20\% = USD\ 4.2825\ bn$
Maximum tax levied = $(25000 \times 200000 + 18000 \times 500000 + 27000 \times 1000000) \times 7.5\% + 15000 \times 1200000 \times 20\% = USD\ 6.675\ bn$
Hence, only option B is possible. Choice (B)

undefined

DIRECTIONS *for questions 25 to 28:* Answer the questions on the basis of the information given below.

The King of Pennyvia had five sons named Alved, Boved, Coplis, Dajli and Emuri. He built five different monuments in honour of each of his sons. Further, he built each monument in a different shape among Minaret, Pyramid, Lotus, Sphere and Cube. He named each monument based on the nature of each of his sons and named the five monuments to be Lazy, Chunky, Drowsy, Greedy and Grumpy.

It is also known that

i. the monument in the shape of a Pyramid was not named Chunky.

ii. the monument named Lazy was in the shape of a Minaret, while the monument built in honour of Dajli was not named Greedy.

iii. the monument built in honour of Alved was not in the shape of a Lotus, while the monument built in honour of Emuri, which was not in the shape of a Sphere, was named Drowsy.

iv. the monument built in the shape of a Lotus was named Greedy, while the monument built in honour of Alved was not named Chunky.

v. the monument built in honour of Boved was named Grumpy, while the monument in the shape of a Sphere was not named Chunky.

Q25. DIRECTIONS *for questions 25 to 28:* Select the correct alternative from the given choices.

What is the shape of the monument built in honour of Emuri?

- a) **Cube**
- b) **Pyramid** **Your answer is correct**
- c) **Lotus**
- d) **Minaret**

Time spent / Accuracy Analysis

Time taken by you to answer this question	**240**
Avg. time spent on this question by all students	**522**
Difficulty Level	**E**
Avg. time spent on this question by students who got this question right	**524**
% of students who attempted this question	**53.59**
% of students who got the question right of those who attempted	**87.18**

Video Solution

Text Solution

From (iii), the monument built in honour of Emuri was named Drowsy. From (v), the monument built in honour of Boved was named Grumpy.
From (iii), the monument built in honour of Alved was not in the shape of Lotus. From (iv), the monument in the shape of Lotus was named Greedy. Hence, the monument built in honour of Alved cannot be Greedy.
From (ii), the monument built in honour of Dajli was not named Greedy.
Hence, the only monument left that can be named Greedy is the monument built in honour of Coplis. From (iv), this monument must be in the shape of Lotus.
The monument built in honour of Alved cannot be Grumpy or Drowsy or Greedy or Chunky (from (iv)). Hence, the monument built in honour of Alved must have been named Lazy. From (ii), the shape of this monument is Minaret.
The monument built in honour of Dajli must have been named Chunky.
From (v), the monument in the shape of Sphere was not named Chunky. Hence, the monument built in honour of Dajli cannot be a Sphere. From (i), this monument cannot be a Pyramid. Hence, it must be in the shape of a Cube.
From (iii), the monument built in honour of Emuri is not in the shape of a Sphere. Hence, it must be in the shape of a Cube.
The monument built in honour of Boved must be in the shape of Sphere.
The following table presents this information:

Person	Shape	Name
Alved	Minaret	Lazy
Boved	Sphere	Grumpy
Coplis	Lotus	Greedy
Dajli	Cube	Chunky
Emuri	Pyramid	Drowsy

The monument built in honour of Emuri was built in the shape of a Pyramid.

Choice (B)

undefined

DIRECTIONS *for questions 25 to 28:* Answer the questions on the basis of the information given below.

The King of Pennyvia had five sons named Alved, Boved, Coplis, Dajli and Emuri. He built five different monuments in honour of each of his sons. Further, he built each monument in a different shape among Minaret, Pyramid, Lotus, Sphere and Cube. He named each monument based on the nature of each of his sons and named the five monuments to be Lazy, Chunky, Drowsy, Greedy and Grumpy.

It is also known that

i. the monument in the shape of a Pyramid was not named Chunky.

ii. the monument named Lazy was in the shape of a Minaret, while the monument built in honour of Dajli was not named Greedy.

iii. the monument built in honour of Alved was not in the shape of a Lotus, while the monument built in honour of Emuri, which was not in the shape of a Sphere, was named Drowsy.

iv. the monument built in the shape of a Lotus was named Greedy, while the monument built in honour of Alved was not named Chunky.

v. the monument built in honour of Boved was named Grumpy, while the monument in the shape of a Sphere was not named Chunky.

Q26. DIRECTIONS *for questions 25 to 28:* Select the correct alternative from the given choices.

What is the name of the monument built in honour of Alved?

- a) **Lazy** **Your answer is correct**
- b) **Greedy**
- c) **Chunky**
- d) **Cannot be determined**

Time spent / Accuracy Analysis

Time taken by you to answer this question	**9**
Avg. time spent on this question by all students	**43**
Difficulty Level	**E**
Avg. time spent on this question by students who got this question right	**38**
% of students who attempted this question	**53.66**
% of students who got the question right of those who attempted	**84.4**

Video Solution

Text Solution

From (iii), the monument built in honour of Emuri was named Drowsy. From (v), the monument built in honour of Boved was named Grumpy.
From (iii), the monument built in honour of Alved was not in the shape of Lotus. From (iv), the monument in the shape of Lotus was named Greedy. Hence, the monument built in honour of Alved cannot be Greedy.
From (ii), the monument built in honour of Dajli was not named Greedy.
Hence, the only monument left that can be named Greedy is the monument built in honour of Coplis. From (iv), this monument must be in the shape of Lotus.
The monument built in honour of Alved cannot be Grumpy or Drowsy or Greedy or Chunky (from (iv)). Hence, the monument built in honour of Alved must have been named Lazy. From (ii), the shape of this monument is Minaret.
The monument built in honour of Dajli must have been named Chunky.
From (v), the monument in the shape of Sphere was not named Chunky. Hence, the monument built in honour of Dajli cannot be a Sphere. From (i), this monument cannot be a Pyramid. Hence, it must be in the shape of a Cube.
From (iii), the monument built in honour of Emuri is not in the shape of a Sphere. Hence, it must be in the shape of a Cube.
The monument built in honour of Boved must be in the shape of Sphere.
The following table presents this information:

Person	Shape	Name
Alved	Minaret	Lazy
Boved	Sphere	Grumpy
Coplis	Lotus	Greedy
Dajli	Cube	Chunky
Emuri	Pyramid	Drowsy

The monument built in honour of Alved was named Lazy. Choice (A)

undefined

DIRECTIONS *for questions 25 to 28:* Answer the questions on the basis of the information given below.

The King of Pennyvia had five sons named Alved, Boved, Coplis, Dajli and Emuri. He built five different monuments in honour of each of his sons. Further, he built each monument in a different shape among Minaret, Pyramid, Lotus, Sphere and Cube. He named each monument based on the nature of each of his sons and named the five monuments to be Lazy, Chunky, Drowsy, Greedy and Grumpy.

It is also known that

i. the monument in the shape of a Pyramid was not named Chunky.

ii. the monument named Lazy was in the shape of a Minaret, while the monument built in honour of Dajli was not named Greedy.

iii. the monument built in honour of Alved was not in the shape of a Lotus, while the monument built in honour of Emuri, which was not in the shape of a Sphere, was named Drowsy.

iv. the monument built in the shape of a Lotus was named Greedy, while the monument built in honour of Alved was not named Chunky.

v. the monument built in honour of Boved was named Grumpy, while the monument in the shape of a Sphere was not named Chunky.

Q27. DIRECTIONS *for questions 25 to 28:* Select the correct alternative from the given choices.

What is the name of the monument built in the shape of a Sphere?

a) **Lazy**

b) **Greedy**

c) **Grumpy** **Your answer is correct**

d) **Chunky**

Time spent / Accuracy Analysis

Time taken by you to answer this question	**5**
Avg. time spent on this question by all students	**28**
Difficulty Level	**E**
Avg. time spent on this question by students who got this question right	**25**
% of students who attempted this question	**52.93**
% of students who got the question right of those who attempted	**90.96**

Video Solution

Text Solution

From (iii), the monument built in honour of Emuri was named Drowsy. From (v), the monument built in honour of Boved was named Grumpy.
From (iii), the monument built in honour of Alved was not in the shape of Lotus. From (iv), the monument in the shape of Lotus was named Greedy. Hence, the monument built in honour of Alved cannot be Greedy.
From (ii), the monument built in honour of Dajli was not named Greedy.
Hence, the only monument left that can be named Greedy is the monument built in honour of Coplis. From (iv), this monument must be in the shape of Lotus.
The monument built in honour of Alved cannot be Grumpy or Drowsy or Greedy or Chunky (from (iv)). Hence, the monument built in honour of Alved must have been named Lazy. From (ii), the shape of this monument is Minaret.
The monument built in honour of Dajli must have been named Chunky.
From (v), the monument in the shape of Sphere was not named Chunky. Hence, the monument built in honour of Dajli cannot be a Sphere. From (i), this monument cannot be a Pyramid. Hence, it must be in the shape of a Cube.
From (iii), the monument built in honour of Emuri is not in the shape of a Sphere. Hence, it must be in the shape of a Cube.
The monument built in honour of Boved must be in the shape of Sphere.
The following table presents this information:

Person	Shape	Name
Alved	Minaret	Lazy
Boved	Sphere	Grumpy
Coplis	Lotus	Greedy
Dajli	Cube	Chunky
Emuri	Pyramid	Drowsy

The monument built in the shape of Sphere was named Grumpy. Choice (C)

undefined

DIRECTIONS *for questions 25 to 28:* Answer the questions on the basis of the information given below.

The King of Pennyvia had five sons named Alved, Boved, Coplis, Dajli and Emuri. He built five different monuments in honour of each of his sons. Further, he built each monument in a different shape among Minaret, Pyramid, Lotus, Sphere and Cube. He named each monument based on the nature of each of his sons and named the five monuments to be Lazy, Chunky, Drowsy, Greedy and Grumpy.

It is also known that

i. the monument in the shape of a Pyramid was not named Chunky.

ii. the monument named Lazy was in the shape of a Minaret, while the monument built in honour of Dajli was not named Greedy.

iii. the monument built in honour of Alved was not in the shape of a Lotus, while the monument built in honour of Emuri, which was not in the shape of a Sphere, was named Drowsy.

iv. the monument built in the shape of a Lotus was named Greedy, while the monument built in honour of Alved was not named Chunky.

v. the monument built in honour of Boved was named Grumpy, while the monument in the shape of a Sphere was not named Chunky.

Q28. DIRECTIONS *for questions 25 to 28:* Select the correct alternative from the given choices.

The monument built in the shape of a Cube was built in honour of

- a) **Coplis.**
- b) **Alved.**
- c) **Dajli.** **Your answer is correct**
- d) **Emuri.**

Time spent / Accuracy Analysis

Time taken by you to answer this question	**24**
Avg. time spent on this question by all students	**38**
Difficulty Level	**E**
Avg. time spent on this question by students who got this question right	**35**
% of students who attempted this question	**50.8**
% of students who got the question right of those who attempted	**83.45**

Video Solution

Text Solution

From (iii), the monument built in honour of Emuri was named Drowsy. From (v), the monument built in honour of Boved was named Grumpy.
From (iii), the monument built in honour of Alved was not in the shape of Lotus. From (iv), the monument in the shape of Lotus was named Greedy. Hence, the monument built in honour of Alved cannot be Greedy.
From (ii), the monument built in honour of Dajli was not named Greedy.
Hence, the only monument left that can be named Greedy is the monument built in honour of Coplis. From (iv), this monument must be in the shape of Lotus.
The monument built in honour of Alved cannot be Grumpy or Drowsy or Greedy or Chunky (from (iv)). Hence, the monument built in honour of Alved must have been named Lazy. From (ii), the shape of this monument is Minaret.
The monument built in honour of Dajli must have been named Chunky.
From (v), the monument in the shape of Sphere was not named Chunky. Hence, the monument built in honour of Dajli cannot be a Sphere. From (i), this monument cannot be a Pyramid. Hence, it must be in the shape of a Cube.
From (iii), the monument built in honour of Emuri is not in the shape of a Sphere. Hence, it must be in the shape of a Cube.
The monument built in honour of Boved must be in the shape of Sphere.
The following table presents this information:

Person	Shape	Name
Alved	Minaret	Lazy
Boved	Sphere	Grumpy
Coplis	Lotus	Greedy
Dajli	Cube	Chunky
Emuri	Pyramid	Drowsy

The monument built in the shape of a Cube was built in honour of Dajli.

Choice (C)

undefined

DIRECTIONS *for questions 29 to 32:* Answer the questions on the basis of the information given below.

DIRECTIONS *for questions 29 to 32:* Answer the questions on the basis of the information given below.

The following graph provides the percentage change in the revenue of a company in each year for a period of 15 years, from 2003 to 2017, as compared to the previous year:

Q29. DIRECTIONS *for questions 29 to 32:* Select the correct alternative from the given choices.

The ratio of the revenue of the company in 2009 to that in the year 2016 is

- a) **2 : 1.**
- b) **20 : 11.**
- c) **40 : 21.** **Your answer is correct**
- d) **5 : 3.**

Time spent / Accuracy Analysis

Time taken by you to answer this question	**470**
Avg. time spent on this question by all students	**320**
Difficulty Level	**E**
Avg. time spent on this question by students who got this question right	**339**
% of students who attempted this question	**35.57**
% of students who got the question right of those who attempted	**71.18**

Video Solution

Text Solution

Let the revenue of the company in 2002 by x.

In 2003, the revenue of the company will be 1.25x (or $\frac{5}{4}x$). In 2004, the revenue of the company will be 1.25x × 1.25 = 1.5625x (or $\frac{25}{16}x$).

Similarly, we can calculate the revenue of the company in each year in terms of x. This is presented in the following table:

2003	2004	2005	2006	2007	2008	2009	2010
1.25x	1.5625x	x	1.25x	2x	2.5x	2x	2.5x

2011	2012	2013	2014	2015	2016	2017
x	1.25x	0.75x	0.6x	0.75x	1.05x	1.26x

. Revenue of the company in 2009 = 2x
Revenue of the company in 2016 = 1.05x
Required ratio = 2 : 1.05 = 40 : 21 Choice (C)

undefined

DIRECTIONS *for questions 29 to 32:* Answer the questions on the basis of the information given below.

The following graph provides the percentage change in the revenue of a company in each year for a period of 15 years, from 2003 to 2017, as compared to the previous year:

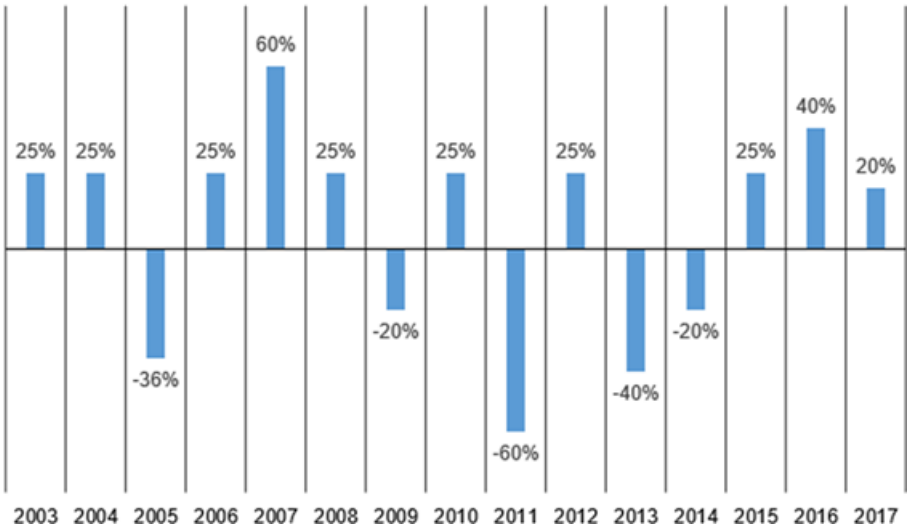

Q30. DIRECTIONS *for questions 29 to 32:* Select the correct alternative from the given choices.

If the revenue of the company did not exceed Rs.100 mn in any year during the given period, the revenue of the company in 2013 can be at most

- a) **Rs.40 mn.**
- b) **Rs.30 mn.** **Your answer is correct**
- c) **Rs.80 mn.**
- d) **None of the above**

Time spent / Accuracy Analysis

Time taken by you to answer this question	**124**
Avg. time spent on this question by all students	**147**
Difficulty Level	**M**
Avg. time spent on this question by students who got this question right	**153**

Time spent / Accuracy Analysis

% of students who attempted this question	**26.88**
% of students who got the question right of those who attempted	**41.77**

Video Solution

Text Solution

Let the revenue of the company in 2002 by x.

In 2003, the revenue of the company will be 1.25x (or $\frac{5}{4}x$). In 2004, the revenue of the company will be 1.25x × 1.25 = 1.5625x (or $\frac{25}{16}x$).

Similarly, we can calculate the revenue of the company in each year in terms of x. This is presented in the following table:

2003	2004	2005	2006	2007	2008	2009	2010
1.25x	1.5625x	x	1.25x	2x	2.5x	2x	2.5x

2011	2012	2013	2014	2015	2016	2017
x	1.25x	0.75x	0.6x	0.75x	1.05x	1.26x

The highest revenue of the company in any year is 2.5x.
If 2.5x = 100 mn, then x = 40 mn.
Revenue of the company in 2013 can be at most 40 × 0.75 = ₹30 mn.

Choice (B)

undefined

DIRECTIONS *for questions 29 to 32:* Answer the questions on the basis of the information given below.

The following graph provides the percentage change in the revenue of a company in each year for a period of 15 years, from 2003 to 2017, as compared to the previous year:

Q31. DIRECTIONS *for questions 29 to 32:* Select the correct alternative from the given choices.

If, among the given 15 years, there was a period of five consecutive years during which the revenue of the company in none of the five years exceeded Rs.200 mn, the maximum possible revenue of the company in any of the 15 years is approximately

- a) **Rs.397 mn.**
- b) **Rs.300 mn.**

c) **Rs.200 mn.**

d) **Rs.400 mn.**

You did not answer this question Show Correct Answer

Time spent / Accuracy Analysis

Time taken by you to answer this question	**407**
Avg. time spent on this question by all students	**168**
Difficulty Level	**D**
Avg. time spent on this question by students who got this question right	**179**
% of students who attempted this question	**12.37**
% of students who got the question right of those who attempted	**41.38**

Video Solution

Text Solution

Let the revenue of the company in 2002 by x.

In 2003, the revenue of the company will be 1.25x (or $\frac{5}{4}x$). In 2004, the revenue of the company will be 1.25x × 1.25 = 1.5625x (or $\frac{25}{16}x$).

Similarly, we can calculate the revenue of the company in each year in terms of x. This is presented in the following table:

2003	2004	2005	2006	2007	2008	2009	2010
1.25x	1.5625x	x	1.25x	2x	2.5x	2x	2.5x

2011	2012	2013	2014	2015	2016	2017
x	1.25x	0.75x	0.6x	0.75x	1.05x	1.26x

We need to identify 5 consecutive years in which the highest revenue in any of these 5 years is minimum.

Between 2011 and 2015, the highest revenue of the company was 1.25x.

For any other period of five consecutive years, the highest revenue was more than 1.25x.

Hence, we can take 1.25x = ₹200 ⇒ x = ₹160 mn

The highest revenue of the company in any year = 160 × 2.5 = ₹400 mn

Choice (D)

undefined

DIRECTIONS *for questions 29 to 32:* Answer the questions on the basis of the information given below.

The following graph provides the percentage change in the revenue of a company in each year for a period of 15 years, from 2003 to 2017, as compared to the previous year:

Q32. DIRECTIONS *for questions 29 to 32:* Select the correct alternative from the given choices.

If in each year in which the revenue of the company exceeded its revenue in the year 2003 by 30% or more, the company donated 10% of its revenue in that year to a charity, and the company donated a total of Rs.7,605,000 to charity during the given period, what is the revenue of the company in the year 2014?

- a) **Rs.4,320,000**
- b) **Rs.5,070,000**
- c) **Rs.4,550,000**
- d) **Rs.5,575,000**

You did not answer this question Show Correct Answer

Time spent / Accuracy Analysis

Time taken by you to answer this question	**22**
Avg. time spent on this question by all students	**294**
Difficulty Level	**M**
Avg. time spent on this question by students who got this question right	**271**
% of students who attempted this question	**9.04**
% of students who got the question right of those who attempted	**58.88**

Video Solution

Text Solution

Let the revenue of the company in 2002 by x.

In 2003, the revenue of the company will be 1.25x (or $\frac{5}{4}$x). In 2004, the revenue of the company will be 1.25x × 1.25 = 1.5625x (or $\frac{25}{16}$x).

Similarly, we can calculate the revenue of the company in each year in terms of x. This is presented in the following table:

2003	2004	2005	2006	2007	2008	2009	2010
1.25x	1.5625x	x	1.25x	2x	2.5x	2x	2.5x

2011	2012	2013	2014	2015	2016	2017
x	1.25x	0.75x	0.6x	0.75x	1.05x	1.26x

In all the years when the revenue was greater than 1.25 × 1.3 = 1.625x, the company donated 10% of its revenues to charity.

Hence, the company donated 10% of its revenues in 2007, 2008, 2009 and 2010.

Total amount donated = $0.1 \times (2x + 2.5x + 2x + 2.5x) = 0.9x$ $0.9x = 7605000 \Rightarrow x = 8450000$

Revenue of the company in 2014 = 0.6x = ₹5070000 Choice (B)

undefined

Q1. DIRECTIONS *for questions 1 and 2:* Select the correct alternative from the given choices.

A fruit vendor purchased a basket of 80 apples and found that 15 of them were rotten and could not be sold. What is the discount that he should offer on each of the remaining apples after marking them up by 40% each, so as to make an overall profit of 10%? (approximately)

- a) **4.2%**
- b) **3.3%**
- c) **5.1%**
- d) **6.4%**

You did not answer this question Show Correct Answer

Time spent / Accuracy Analysis

Time taken by you to answer this question	**118**
Avg. time spent on this question by all students	**246**
Difficulty Level	**E**

Time spent / Accuracy Analysis

Avg. time spent on this question by students who got this question right	**239**
% of students who attempted this question	**37.3**
% of students who got the question right of those who attempted	**78.46**

Video Solution

Text Solution

Let the cost price of each apple = ₹1.

$\Rightarrow$ Final sales = $80\left(1+\frac{10}{100}\right)$ = ₹88.

If d is the discount % on each apple then

$88 = (80 - 15) \times \left(1+\frac{40}{100}\right)\left(1-\frac{d}{100}\right)$

$\Rightarrow 88 = 65 \times 1.4 \times \left(1-\frac{d}{100}\right)$

$= \frac{1-d}{100} \cong 0.967 \Rightarrow d \cong 3.3\%$ Choice (B)

undefined

Q2. DIRECTIONS *for questions 1 and 2:* Select the correct alternative from the given choices.

Last year, Ajay's age was thrice Vijay's age. If the ratio of the sum and the difference of their present ages is 13 : 6, after how many years from now will Ajay's age be twice Vijay's age?

- a) **5** **Your answer is correct**
- b) **7**
- c) **9**
- d) **Never Possible**

Time spent / Accuracy Analysis

Time taken by you to answer this question	**152**
Avg. time spent on this question by all students	**202**
Difficulty Level	**M**
Avg. time spent on this question by students who got this question right	**193**
% of students who attempted this question	**54.35**
% of students who got the question right of those who attempted	**62.96**

Video Solution

Text Solution

Let the present age of Ajay & Vijay be a & v respectively.
Given,
$a - 1 = 3(v - 1)$
$\Rightarrow a = 3v - 2$ ——————(1)

Given, $\frac{a+v}{a-v} = \frac{13}{6}$

$\Rightarrow 6a + 6v = 13a - 13v$
$\Rightarrow 19v = 7a$

$\therefore \frac{a}{v} = \frac{19}{7}$ ——————(2)

From (1) & (2),
$a = 19$ and $v = 7$
Let Ajay be twice as old as Vijay after x years.
$\Rightarrow (a + x) = 2(v + x)$
$\Rightarrow 19 + x = 2(7 + x)$
$\therefore x = 19 - 14 = 5$
$\therefore$ After 5 years, Ajay's age will be twice Vijay's age. Choice (A)

undefined

Q3. DIRECTIONS *for question 3:* Type in your answer in the input box provided below the question.

If $x^2 + \frac{1}{x^2} - 3\left(x + \frac{1}{x}\right) - \frac{47}{4} \le 0$, how many of the following CANNOT be the value of $x + \frac{1}{x}$?

(i) $\frac{-7}{2}$

(ii) $\frac{-5}{2}$

(iii) $\frac{-3}{2}$

(iv) $\frac{7}{2}$

(v) $\frac{13}{2}$

You did not answer this question Show Correct Answer

Time spent / Accuracy Analysis

Time taken by you to answer this question	**58**
Avg. time spent on this question by all students	**231**
Difficulty Level	**D**
Avg. time spent on this question by students who got this question right	**217**
% of students who attempted this question	**30.75**
% of students who got the question right of those who attempted	**22.66**

Video Solution

Text Solution

$$x^2+\frac{1}{x^2}-3\left(x+\frac{1}{x}\right)-\frac{47}{4} \le 0$$

Now L.H.S.

$$=\left(x+\frac{1}{x}\right)^2-2-3\left(x+\frac{1}{x}\right)-\frac{47}{4}$$

Let $x+\frac{1}{x}=a$

$$a^2-2-3a-\frac{47}{4} \le 0$$

$$\Rightarrow a^2-3a-\frac{55}{4} \le 0$$

$$\Rightarrow \frac{3-\sqrt{9+55}}{2} \le a \le \frac{3+\sqrt{9+55}}{2}$$

$$\Rightarrow \frac{-5}{2} \le a \le \frac{11}{2}$$

However, since $a = x + \frac{1}{x}$, a must also satisfy $|a| \ge 2$.

$\therefore$ a lies in the range $\left[\frac{-5}{2}-2\right] \cup \left[2, \frac{11}{2}\right]$

From the given six values only $\frac{-5}{2}$ and $\frac{7}{2}$ satisfy. Hence, the remaining three values are NOT possible. Ans: (3)

undefined

Q4. DIRECTIONS *for questions 4 to 7:* Select the correct alternative from the given choices.

A two-digit number is four times the sum of its digits and two times the product of its digits. How many such numbers are possible?

- a) **0**
- b) **1** **Your answer is correct**
- c) **2**
- d) **More than 2**

Time spent / Accuracy Analysis

Time taken by you to answer this question	**149**
Avg. time spent on this question by all students	**172**
Difficulty Level	**M**
Avg. time spent on this question by students who got this question right	**175**
% of students who attempted this question	**47.36**
% of students who got the question right of those who attempted	**52.85**

Video Solution

Text Solution

Let the two-digit number be ab
Given,
$10a + b = 4(a + b)$ ——————(1)
$10a + b = 2\ a.\ b$ ——————(2)
From (1),
$10a + b = 4a + 4b$
$6a = 3b$
$\Rightarrow b = 2a$
Substituting in (2),
$12a = 4a^2$
$\Rightarrow a = 0$ or $a = 3$
If a = 0, the number will be 00, which is not a two-digit number.
$\therefore$ a = 3 and b = 6.
Hence, the only number that is possible is ab = 36. Choice (B)

undefined

Q5. DIRECTIONS *for questions 4 to 7:* Select the correct alternative from the given choices.

If Rahul marked his goods 50% above cost price and then sold them after giving two successive discounts of 10% and 20%, what is his profit percentage?

- a) **22%**
- b) **20%**
- c) **12%**
- d) **8%** **Your answer is correct**

Time spent / Accuracy Analysis

Time taken by you to answer this question	**51**
Avg. time spent on this question by all students	**102**
Difficulty Level	**VE**
Avg. time spent on this question by students who got this question right	**95**
% of students who attempted this question	**56.76**
% of students who got the question right of those who attempted	**85.51**

Video Solution

Text Solution

Let the C. P. = ₹100

$$\text{M. P.} = 100\left(1+\frac{50}{100}\right) = 150$$

$$\text{S. P.} = 150\left(1-\frac{10}{100}\right)\left(1-\frac{20}{100}\right)$$

$$= 150\left(\frac{90}{100}\right)\left(\frac{80}{100}\right) = 108$$

$\therefore$ He gets 8% profit on selling the goods. Choice (D)

undefined

Q6. DIRECTIONS *for questions 4 to 7:* Select the correct alternative from the given choices.

If $x^{\sqrt{x}^{\sqrt{x}^{\cdot^{\cdot^{\infty}}}}} = \frac{1}{9}$, find the value of x.

- a) $\frac{1}{3^4}$
- b) $\frac{1}{3^5}$
- c) $\frac{1}{3^6}$
- d) $\frac{1}{3^8}$

You did not answer this question Show Correct Answer

Time spent / Accuracy Analysis

Time taken by you to answer this question	**144**
Avg. time spent on this question by all students	**120**
Difficulty Level	**M**
Avg. time spent on this question by students who got this question right	**133**
% of students who attempted this question	**15.56**
% of students who got the question right of those who attempted	**34.47**

Video Solution

Text Solution

$$x^{\sqrt{x}^{\sqrt{x}^{\cdot^{\cdot^{\infty}}}}} = \frac{1}{9}$$

Applying square root on both sides, we get

$$\sqrt{x}^{\sqrt{x}^{\sqrt{x}^{\cdot^{\cdot^{\infty}}}}} = \sqrt{\frac{1}{9}} = \frac{1}{3}$$

Since the given equations extends till infinity it can be considered as $x^{\frac{1}{3}} = \frac{1}{9} = \frac{1}{3^2}$

$\Rightarrow x = \left(\frac{1}{3^2}\right)^3$ (i.e., cubing both sides)

$\therefore x = \frac{1}{3^6}$ Choice (C)

undefined

Q7. DIRECTIONS *for questions 4 to 7:* Select the correct alternative from the given choices.

Consider the set S = {1, 2, 3, 4, 5, 7, 8, 9, 10}. Find the number of subsets of S which contain at least seven elements and include exactly one among '5' and '9'.

a) **18**

b) **74**

c) **80**

d) **16** **Your answer is correct**

Time spent / Accuracy Analysis

Time taken by you to answer this question	**246**
Avg. time spent on this question by all students	**164**
Difficulty Level	**M**
Avg. time spent on this question by students who got this question right	**167**
% of students who attempted this question	**21.7**
% of students who got the question right of those who attempted	**39.78**

Video Solution

Text Solution

The number of elements in the required subsets can be either 7 or 8, because both 5 and 9 cannot be present in the same subset.
The number of subsets which contain exactly seven elements and include 5 but not 9 = The number of subsets which contain exactly seven elements and include 9 but not 5, i.e., six elements are to be selected from the remaining seven elements = ${}^7C_6 = 7$.
The number of subsets which contain exactly eight elements and include 5 but not 9 = The number of subsets which contain exactly eight elements and include 9 but not 5 = ${}^7C_7 = 1$.
$\therefore$ The required value = $2({}^7C_6) + 2({}^7C_7) = 2(7) + 2$
$= 14 + 2 = 16$ Choice (D)

undefined

Q8. DIRECTIONS *for question 8:* Type in your answer in the input box provided below the question.

The area of a rectangle is 391 sq. units. If the rectangle becomes a square after its length is decreased by 4 units and its breadth is increased by 2 units, find the decrease in the area (in sq.units) of the rectangle.

Your Answer:30 **Your answer is correct**

Time spent / Accuracy Analysis

Time taken by you to answer this question	**172**
Avg. time spent on this question by all students	**204**
Difficulty Level	**E**
Avg. time spent on this question by students who got this question right	**193**
% of students who attempted this question	**39.94**
% of students who got the question right of those who attempted	**65.86**

Video Solution

Text Solution

Let the length and the breadth of the rectangle be l and b respectively.
Given $l - 4 = b + 2$
$\Rightarrow b = l - 6$
and $(l)(l - 6) = 391$
$\Rightarrow l = 23$
$\therefore$ The area of the square play ground $= 19^2 = 361$.
$\therefore$ The decrease in the area of the play ground
$= 391 - 361 = 30$ sq. units

Ans: (30)

undefined

Q9. DIRECTIONS *for questions 9 and 10:* Select the correct alternative from the given choices.

While typing a book, Raju, a typist, spotted that N consecutive pages, starting from the Kth page, were not numbered and he found the sum of the page numbers of these pages to be 100. Which among the following CANNOT be the value of K?

- a) **9**
- b) **17**
- c) **18**
- d) **More than one of the above**

You did not answer this question Show Correct Answer

Time spent / Accuracy Analysis

Time taken by you to answer this question	**26**
Avg. time spent on this question by all students	**161**
Difficulty Level	**D**
Avg. time spent on this question by students who got this question right	**173**
% of students who attempted this question	**28.4**
% of students who got the question right of those who attempted	**32.45**

Video Solution

Text Solution

The sum of the page numbers of N consecutive pages starting form the Kth page = $\left(\frac{K+(K+N-1)}{2}\right)N = 100$

$\Rightarrow N(2K + N - 1) = 200$

2K + N – 1 is always greater than N (Because K ≥ 1). On checking with factors of 200, we will get the possible values of (N, K) as (1, 100), (5, 18) and (8, 9). Hence K = 17 is not possible.

Alternative Solution:

From the given options, if k = 9, we get $\frac{(9+(9+N-1))}{2} \times N = 100$, i.e., $N^2 + 17N - 200 = 0$

$\Rightarrow N = 8$.

Alternatively, we can see that 9 + 10 + 11 ..... + 16 = 100.

But, if k = 17, we do not get N as a natural number.

Also, if K = 18, we get N = 5.

Hence, K= 17 is not possible. Choice (B)

undefined

Q10. DIRECTIONS *for questions 9 and 10:* Select the correct alternative from the given choices.

Two cars, A and B, simultaneously started from City P to City Q and from City Q to City P respectively and met each other on the way at 1:00 p.m. If A and B reached their destinations at 7:00 p.m. and 3:40 p.m. respectively, then at what time did they start?

- a) **10:00 a.m.**
- b) **8:00 a.m.**
- c) **9:00 a.m.**
- d) **11:00 a.m.**

You did not answer this question Show Correct Answer

Time spent / Accuracy Analysis

Time taken by you to answer this question	**68**
Avg. time spent on this question by all students	**211**
Difficulty Level	**E**
Avg. time spent on this question by students who got this question right	**205**
% of students who attempted this question	**20.81**
% of students who got the question right of those who attempted	**59.14**

Video Solution

Text Solution

The product of times taken after meeting = square of the time taken to meet.

$\Rightarrow 2\frac{2}{3} \times 6 = t^2$, say

$\Rightarrow t = 4$ hours.

$\therefore$ They started 4 hours before 1:00 p.m., i.e., 9:00 a.m. Choice (C)

undefined

Q11. DIRECTIONS *for question 11:* Type in your answer in the input box provided below the question.

Find the area (in sq.units) of the region enclosed by the graphs of the equations $x^2 = 18$ and $y^2 = 50$.

You did not answer this question Show Correct Answer

Time spent / Accuracy Analysis

Time taken by you to answer this question	**108**
Avg. time spent on this question by all students	**106**
Difficulty Level	**E**
Avg. time spent on this question by students who got this question right	**104**
% of students who attempted this question	**22.91**
% of students who got the question right of those who attempted	**28.59**

Video Solution

Text Solution

The area enclosed by the graphs $x^2 = 18$ and $y^2 = 50$ will be a rectangle whose length is $2\sqrt{50}$ units and breadth, $2\sqrt{18}$ units. The area of the rectangle = $2\sqrt{18} * 2\sqrt{50}$ = 120 sq. units. Ans: (120)

undefined

Q12. DIRECTIONS *for questions 12 and 13:* Select the correct alternative from the given choices.

There are seven numbers, a_1, a_2, a_3, a_4, a_5, a_6 and a_7, such that, for i = 1, 2, 3, 4 and 5, the sum $a_i + a_{i+1} + a_{i+2}$ is 1, if i is odd, and −1, if i is even. Also, $a_6 + a_7 + a_1 = -1$ and $a_7 + a_1 + a_2 = 1$. Find (a_4, a_7).

- a) $\left(\frac{2}{3}, -\frac{1}{3}\right)$
- b) $\left(-\frac{4}{3}, -\frac{1}{3}\right)$
- c) $\left(\frac{1}{3}, \frac{1}{3}\right)$
- d) $\left(-\frac{5}{3}, \frac{1}{3}\right)$

You did not answer this question Show Correct Answer

Time spent / Accuracy Analysis

Time taken by you to answer this question	**8**
Avg. time spent on this question by all students	**211**
Difficulty Level	**D**
Avg. time spent on this question by students who got this question right	**239**
% of students who attempted this question	**5.82**
% of students who got the question right of those who attempted	**53.97**

Video Solution

Text Solution

$a_1 + a_2 + a_3 = 1$
$a_2 + a_3 + a_4 = -1$
$a_3 + a_4 + a_5 = 1$
$a_4 + a_5 + a_6 = -1$
$a_5 + a_6 + a_7 = 1$
$a_1 + a_6 + a_7 = -1$
$a_1 + a_2 + a_7 = 1$
On adding 7 equations, we get,
$3(a_1 + a_2 + a_3 + a_4 + \text{- - - - - -} a_7) = 1$ ----- (1)

(i) $3(a_1 + a_2 + a_3) + 3a_4 + 3(a_5 + a_6 + a_7) = 1$
$3 + 3a_4 + 3 = 1$
$3a_4 = -5$
$a_4 = \frac{-5}{3}$

(ii) $3(a_1 + a_2 + a_3) + 3(a_4 + a_5 + a_6) + 3a_7 = 1$
$0 + 3a_7 = 1 \Rightarrow a_7 = \frac{1}{3}$

$\therefore (a_4, a_7) = \left(\frac{-5}{3}, \frac{1}{3}\right)$

Alternative Solution:

$a_4 + a_5 + a_6 = -1$
$a_5 + a_6 + a_7 = 1$
Subtracting, $a_4 - a_7 = -2$
Only option (D) satisfies. Choice (D)

undefined

Q13. DIRECTIONS *for questions 12 and 13:* Select the correct alternative from the given choices.

A shopkeeper has a faulty balance, in which the two pans have unequal weights. With this balance, he weighs 10 kg of rice. However, the customer insists that the rice be kept in the other pan and weighed. The weight of the rice then turns out to be $8\frac{1}{2}$ kg. Find the actual weight of the rice.

- a) **8.75 kg**
- b) **9 kg**
- c) **9.25 kg**
- d) **Cannot be determined**

You did not answer this question Show Correct Answer

Time spent / Accuracy Analysis

Time taken by you to answer this question	**52**
Avg. time spent on this question by all students	**110**
Difficulty Level	**M**
Avg. time spent on this question by students who got this question right	**120**
% of students who attempted this question	**29.44**
% of students who got the question right of those who attempted	**45.19**

Video Solution

Text Solution

Let the weights of the two pans be w_1 kg and w_2 kg respectively, where $w_1 > w_2$ and the weight of the rice be w kg.
From the data given we get two equations
$w + w_2 = 10 + w_1$ ------- (1) and

$w + w_1 = 8\frac{1}{2} + w_2$ ------- (2)

Adding (1) and (2) we get 2w = 18.5

$\therefore w = \frac{18.5}{2} = 9.25$

Therefore the actual weight of the rice was 9.25 kg Choice (C)

undefined

Q14. DIRECTIONS *for questions 14 and 15:* Type in your answer in the input box provided below the question.

If A = {14, −11, 19, 11, 7, 41, 16, 23}, find the average of the averages of all the possible triplets of numbers taken from the given set A.

You did not answer this question Show Correct Answer

Time spent / Accuracy Analysis

Time taken by you to answer this question	**18**
Avg. time spent on this question by all students	**140**
Difficulty Level	**E**
Avg. time spent on this question by students who got this question right	**129**
% of students who attempted this question	**11.87**
% of students who got the question right of those who attempted	**37.39**

Video Solution

Text Solution

Average of the averages of all the possible triplets taken from n numbers = Average o
the n numbers.

$= \frac{14-11+19-11+7+41+16+23}{8} = 15$ Ans: (15)

undefined

Q15. DIRECTIONS *for questions 14 and 15:* Type in your answer in the input box provided below the question.

Four positive numbers are in the ratio 2 : 4 : 6 : 9. If sum of their squares is equal to 1233, then find the second highest number.

Your Answer:18 **Your answer is correct**

Time spent / Accuracy Analysis

Time taken by you to answer this question	**86**
Avg. time spent on this question by all students	**124**
Difficulty Level	**VE**
Avg. time spent on this question by students who got this question right	**121**

Time spent / Accuracy Analysis

% of students who attempted this question	**49.08**
% of students who got the question right of those who attempted	**62.03**

Video Solution

Text Solution

Let the numbers be 2x, 4x, 6x and 9x
Given,
$(2x)^2 + (4x)^2 + (6x)^2 + (4x)^2 = 1233$
$4x^2 + 16x^2 + 36x^2 + 81x^2 = 1233$
$137x^2 = 1233$
$\Rightarrow x^2 = 9$
$x = 3$
$\therefore$ Second highest number will be 6x i.e., 18 Ans: (18)

undefined

Q16. DIRECTIONS *for questions 16 to 19:* Select the correct alternative from the given choices.

Find the approximate sum of the first 20 terms of the series $\frac{1}{3}, \frac{16}{9}, \frac{79}{27}, \frac{322}{81}, \ldots\ldots$

- a) **209**
- b) **208**
- c) **207**
- d) **206**

You did not answer this question Show Correct Answer

Time spent / Accuracy Analysis

Time taken by you to answer this question	**39**
Avg. time spent on this question by all students	**145**
Difficulty Level	**D**
Avg. time spent on this question by students who got this question right	**189**
% of students who attempted this question	**5.54**
% of students who got the question right of those who attempted	**34.15**

Video Solution

Text Solution

$$\frac{1}{3}+\frac{16}{9}+\frac{79}{27}+\ldots\ldots\ldots$$

$$=\left(1-\frac{2}{3}\right)+\left(2-\frac{2}{9}\right)+\left(3-\frac{2}{27}\right)+\ldots\ldots\ldots$$

In this way the series is equal to

$$=1+2+3+\ldots\ldots\ldots-\left(\frac{2}{3}+\frac{2}{9}+\frac{2}{27}+\ldots\ldots\ldots\right)$$

The sum of the above series up to 20 terms is

The second part of the expression is a G. P with $\frac{2}{3}$ as the first term (i.e., a fraction) and r equal to $\frac{1}{3}$. Hence sum of the first twenty terms can be approximated to sum of infinite terms of the progression.

$\therefore$ The required value = $\frac{(20)(21)}{2}-\frac{\frac{2}{3}}{1-\frac{1}{3}}$ = 210 – 1 = 209.

Alternative Solution:

nth term in the series is $\frac{3^n \times n-2}{3^n}$

Sum of first 20 terms $\sum_{n=1}^{20} n-2\sum_{n=1}^{20}\frac{1}{3^n}$

= 210 – 1 (approximately)
= 209. Choice (A)

undefined

Q17. DIRECTIONS *for questions 16 to 19:* Select the correct alternative from the given choices.

If $x^2 - 5x + 6 = 0$ and $x^2 - ax + 12 = 0$ have a root in common, find the minimum value of a.

- a) **7** **Your answer is correct**
- b) **8**
- c) **9**
- d) **None of above**

Time spent / Accuracy Analysis

Time taken by you to answer this question **81**

Time spent / Accuracy Analysis

Avg. time spent on this question by all students	**114**
Difficulty Level	**E**
Avg. time spent on this question by students who got this question right	**110**
% of students who attempted this question	**45.48**
% of students who got the question right of those who attempted	**68.25**

Video Solution

Text Solution

The roots of the first equation $x^2 - 5x + 6 = 0$ are 2 and 3.

If 2 is a root of the second equation, then the other root must be $\frac{12}{2} = 6$.

$\Rightarrow$ the value of a is $2 + 6 = 8$.

If 3 is a root of the second equation, then the other root must be be $\frac{12}{3} = 4$. $\Rightarrow$ the value of a is $3 + 4 = 7$.

$\therefore$ Minimum value of a = 7. Choice (A)

undefined

Q18. DIRECTIONS *for questions 16 to 19:* Select the correct alternative from the given choices.

A watch salesman started his day with 11 identical watches. During the first hour of the day, he visited exactly four people and sold at least one watch. In how many ways could he have sold the watches during the first hour of the day?

- a) **714**
- b) **1365**
- c) **1364**
- d) **3002**

You did not answer this question Show Correct Answer

Time spent / Accuracy Analysis

Time taken by you to answer this question	**147**
Avg. time spent on this question by all students	**148**
Difficulty Level	**D**
Avg. time spent on this question by students who got this question right	**154**
% of students who attempted this question	**7.87**
% of students who got the question right of those who attempted	**56.4**

Video Solution

Text Solution

Let the four persons whom the salesman approached be P, Q, R and S. Let him sell a, b, c and d watches to them respectively. After approaching them all let the watches remaining with the salesman be x. So the four persons and the salesman together have 11 identical watches.

$\therefore a + b + c + d + x = 11 \quad \rightarrow \quad (i)$

where a, b, c, d and x are integers, with

$x \geq 0, a \geq 0, b \geq 0, c \geq 0$ and $d \geq 0$.

The number of ways of selling the watches to the four persons is same as the number of solutions of (i)

The number of non-negative integral solutions of (i) is ${}^{(11+5-1)}C_{(5-1)} = {}^{15}C_4$

But this includes the possibility of a = 0, b = 0, c = 0, d = 0 and x = 11. But since it is given that $a + b + c + d \geq 1$, that one possibility has to be deducted.

$\therefore$ The number of ways in which he can sell the watches is ${}^{15}C_4 - 1$ i.e. 1365 – 1 = 1364. Choice (C)

undefined

Q19. DIRECTIONS *for questions 16 to 19:* Select the correct alternative from the given choices.

Vicky wants to purchase some pencils and pens by spending exactly Rs.210. If a pencil and a pen cost Rs.5 and Rs.8 each respectively, and the number of pens purchased is more than the number of pencils purchased, then in how many different combinations can Vicky purchase the items?

- a) **1**
- b) **2** **Your answer is correct**
- c) **3**
- d) **4**

Time spent / Accuracy Analysis

Time taken by you to answer this question	**188**
Avg. time spent on this question by all students	**186**
Difficulty Level	**M**
Avg. time spent on this question by students who got this question right	**187**
% of students who attempted this question	**40.08**
% of students who got the question right of those who attempted	**63.09**

Video Solution

Text Solution

Let x be the number of pencils and y be the number of pens. Then we have $5x + 8y = 210$. Since $5x + 8y$ is equal to an even number, x has to be even.
On checking, the least possible positive integral value of $x = 2$, and then incrementing x and 8 and y by 5, we get the possible values of x and y as follows

x	y
2	25
10	20
18	15
26	10
34	5

$\therefore$ The number of different combinations in which Vicky can purchase pencils and pens such that the number of pens purchased is more than the number of pencils purchased is two, i.e., only (2, 25) and (10, 20). Choice (B)

undefined

Q20. DIRECTIONS *for question 20:* Type in your answer in the input box provided below the question.

There is a circle in the x-y plane with its centre at the point C = (a, b) and radius 6 units. If a and b are integers, how many points with integer co-ordinates do not lie outside the circle?

You did not answer this question Show Correct Answer

Time spent / Accuracy Analysis

Time taken by you to answer this question	**29**
Avg. time spent on this question by all students	**131**
Difficulty Level	**D**
Avg. time spent on this question by students who got this question right	**211**
% of students who attempted this question	**15.24**
% of students who got the question right of those who attempted	**6.32**

Video Solution

Text Solution

If the circle is shifted by a units to the left, (where a is an integer), there is no change in the number of points inside and on the circle. Similarly, if it is shifted b units downwards (where b is an integer), there is no change. Therefore, let the centre of the circle be shifted from (a, b) to (0, 0). Then the equation of the circle is $x^2 + y^2 = 36$
We want all the integral solutions of (x, y) for $x^2 + y^2 \leq 36$.
The x-axis is along one of the diameters of the circle. Let us draw the lines y = 1, y = 2, y = 3, y = 4, y = 5 and y = 6

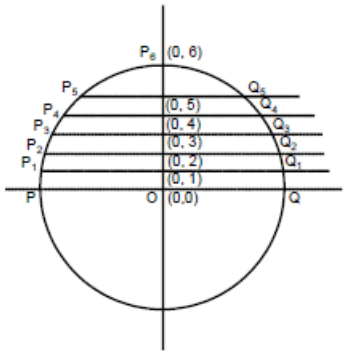

Because of the symmetry of the circle about the x-axis let us consider the part of the circle above the x-axis. All the integer coordinates will lie only on those lines shown.
Consider the line $P_1 Q_1$

$P_1 = (-\sqrt{35}, 1)$ and $Q_1 = \sqrt{35}, 1)$

∴ All points from (–5, 1) to (5, 1) lie on this line i.e. 11 points. Similarly on P_2Q_2, P_3Q_3, P_4Q_4, P_5Q_5 lies 11, 11, 9, 7 in points with integral coordinates and one point at P_6 i.e. (0, 6)
So, a total of 11 + 11 + 11 + 9 + 7 + 1 i.e. 50 points above the x-axis.
Similarly there will be 50 points below the x-axis and 13 points (from (–6, 0) to (6, 0)) on the x-axis.
∴ The total number of points with integral coordinates not lying outside the circle = 50 + 50 + 13 = 113 Ans: (113)

undefined

Q21. DIRECTIONS *for questions 21 to 28:* Select the correct alternative from the given choices.

Fresh berries contain 72% water, while dry berries contain 18% water. What quantity of dry berries can be obtained from 41 kg of fresh berries?

- a) **12 kg**
- b) **13 kg**
- c) **14 kg**
- d) **15 kg**

You did not answer this question Show Correct Answer

Time spent / Accuracy Analysis

Time taken by you to answer this question **182**

Time spent / Accuracy Analysis

Avg. time spent on this question by all students	**153**
Difficulty Level	**E**
Avg. time spent on this question by students who got this question right	**146**
% of students who attempted this question	**29.03**
% of students who got the question right of those who attempted	**62.5**

Video Solution

Text Solution

Let us say we have x kg of fresh berries from which y kg of dry berries can be obtained. Then, amount of dry pulp in both will be same.

$$\frac{28x}{100} = \frac{82y}{100}$$

$$y = \frac{28x}{82}$$

Given x = 41

$$y = \frac{28 \times 41}{82}$$

= 14 kg

Choice (C)

undefined

Q21. DIRECTIONS *for questions 21 to 28:* Select the correct alternative from the given choices.

Fresh berries contain 72% water, while dry berries contain 18% water. What quantity of dry berries can be obtained from 41 kg of fresh berries?

- a) **12 kg**
- b) **13 kg**
- c) **14 kg**
- d) **15 kg**

You did not answer this question Show Correct Answer

Time spent / Accuracy Analysis

Time taken by you to answer this question	**182**
Avg. time spent on this question by all students	**153**
Difficulty Level	**E**
Avg. time spent on this question by students who got this question right	**146**
% of students who attempted this question	**29.03**
% of students who got the question right of those who attempted	**62.5**

Video Solution

Text Solution

Let us say we have x kg of fresh berries from which y kg of dry berries can be obtained. Then, amount of dry pulp in both will be same.

$$\frac{28x}{100} = \frac{82y}{100}$$

$$y = \frac{28x}{82}$$

Given x = 41

$$y = \frac{28 \times 41}{82}$$

= 14 kg

Choice (C)

undefined

Q22. DIRECTIONS *for questions 21 to 28:* Select the correct alternative from the given choices.

A function $f(x, y)$ is said to be a linear function, if it is of the form $ax + by + c$. If a linear function $f(x, y)$ is such that, $f(2, k) \geq f(3, k)$; $f(5, k) \geq f(4, k)$ and $f(6, k) = 10$, find the value of $f(7, k)$.

- a) **9**
- b) **8**
- c) **10**
- d) **Cannot be determined**

You did not answer this question Show Correct Answer

Time spent / Accuracy Analysis

Time taken by you to answer this question	**4**
Avg. time spent on this question by all students	**98**
Difficulty Level	**M**
Avg. time spent on this question by students who got this question right	**111**
% of students who attempted this question	**8.41**
% of students who got the question right of those who attempted	**42.71**

Video Solution

Text Solution

Given $f(2, k) \geq f(3, k)$ and $f(5, k) \geq f(4, k)$

$\Rightarrow (2a + bk + c) \geq (3a + bk + c)$ and

$(5a + bk + c) \geq (4a + bk + c)$

$\Rightarrow a \leq 0$ and $a \geq 0 \Rightarrow a = 0$.

So, $f(x, y) = by + c$

Also given that, $f(6, k) = bk + c = 10$

$\therefore f(7, k) = bk + c = 10$

Choice (C)

undefined

Q23. DIRECTIONS *for questions 21 to 28:* Select the correct alternative from the given choices.

Find the value of x, if $x^2 = 17+6\sqrt{6}-6\sqrt{2}-4\sqrt{3}$.

- a) $\pm\left(\sqrt{2}+\sqrt{6}-3\right)$
- b) $\pm\left(3+\sqrt{2}+\sqrt{6}\right)$
- c) $\pm\left(3-\sqrt{2}+\sqrt{6}\right)$
- d) **None of the above**

You did not answer this question Show Correct Answer

Time spent / Accuracy Analysis

Time taken by you to answer this question	**106**
Avg. time spent on this question by all students	**147**
Difficulty Level	**E**
Avg. time spent on this question by students who got this question right	**147**
% of students who attempted this question	**18.76**
% of students who got the question right of those who attempted	**65.59**

Video Solution

Text Solution

By trail and error method from the options, it can be observed that $\left[\pm\left(3-\sqrt{2}+\sqrt{6}\right)\right]^2$

$= 17+6\sqrt{6}-6\sqrt{2}-4\sqrt{3}$ Choice (C)

undefined

Q24. DIRECTIONS *for questions 21 to 28:* Select the correct alternative from the given choices.

A sum takes five years to become three times itself under simple interest, at a certain rate of interest. If it was lent at the same interest rate under compound interest, interest being compounded annually, then in how many years will the sum become more than five times itself?

- a) **4**
- b) **5** **Your answer is correct**
- c) **6**
- d) **7**

Time spent / Accuracy Analysis

Time taken by you to answer this question	**160**
Avg. time spent on this question by all students	**175**
Difficulty Level	**E**

Time spent / Accuracy Analysis

Avg. time spent on this question by students who got this question right	**179**
% of students who attempted this question	**25.47**
% of students who got the question right of those who attempted	**61.33**

Video Solution

Text Solution

Let x be the principal amount.

$\Rightarrow$ The rate of interest = $\frac{3x-x}{5} \times 100 = 40\%$.

At compound interest, the amount become x $(1.4)^n$ times in n years i.e, 1.4, 1.96, 2.74, 3.84, 5.38.

$\therefore$ In five years the amount becomes more than five times the initial.

Choice (B)

undefined

Q25. DIRECTIONS *for questions 21 to 28:* Select the correct alternative from the given choices.

A boy starts to paint a fence on one day. On the second day, two more boys join him. On the third day, three more boys join the group, on the fourth day four more boys join the group and so on. If the fence is completely painted this way in exactly 20 days, find the number of days in which 10 men painting together can paint the fence completely, given that each man can paint twice as fast as a boy can.

a) **20 days** **Your answer is incorrect**

b) **154 days**

c) **45 days**

d) **77 days**

Show Correct Answer

Time spent / Accuracy Analysis

Time taken by you to answer this question	**211**
Avg. time spent on this question by all students	**200**
Difficulty Level	**M**
Avg. time spent on this question by students who got this question right	**236**
% of students who attempted this question	**10.9**
% of students who got the question right of those who attempted	**40.33**

Video Solution

Text Solution

The number of mandays

$= \frac{1}{2}[1 + (1 + 2) + (1 + 2 + 3) + \ldots\ldots (1 + 2 + \ldots\ldots + 20)]$

[because on the nth day $(1 + 2 \ldots\ldots + n)$ boys work, where each boy = ½ man) =

$$\frac{1}{2}\left(\sum_{1}^{20}\left(\frac{(n)(n+1)}{2}\right)\right)$$

$$= \frac{1}{2} \times \frac{1}{2}\left[\frac{20 \cdot 21 \cdot 41}{6} + \frac{20 \cdot 21}{2}\right] = \frac{1}{4}[3080] = 770$$

$\therefore$ 10 men will take 770/10 = 77 days. Choice (D)

undefined

Q26. DIRECTIONS *for questions 21 to 28:* Select the correct alternative from the given choices.

ABCD is a trapezium in which AB CD, AB = 12 cm and CD = 24 cm. If O is the point of intersection of AC and BD, find the ratio of the area of triangle AOD to that of triangle COD.

- a) **1 : 2**
- b) **1 : 3**
- c) **1 : 4**
- d) **Cannot be determined** **Your answer is incorrect**

Show Correct Answer

Time spent / Accuracy Analysis

Time taken by you to answer this question	**86**
Avg. time spent on this question by all students	**106**
Difficulty Level	**D**
Avg. time spent on this question by students who got this question right	**108**
% of students who attempted this question	**20.11**
% of students who got the question right of those who attempted	**38.24**

Video Solution

Text Solution

$\overline{AB} \parallel \overline{CD} \Rightarrow \angle OCD = \angle OAB$ and $\angle OBA = \angle ODC$

$\therefore \angle AOB = \angle COD$

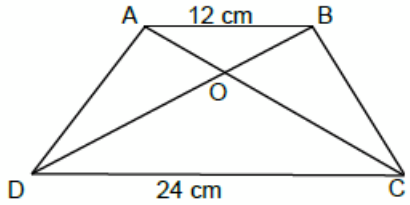

$\Rightarrow \Delta ABO$ and ΔCDO are similar triangles and

$$\frac{AO}{CO} = \frac{AB}{CD} = \frac{12}{24} = \frac{1}{2} \quad \text{_____ (1)}$$

Also, ΔAOD and ΔCOD have the same altitude, if their bases are considered as AO and CO respectively and third vertex as D.

$\therefore$ The ratio of area of ΔAOD to that of ΔCOD

= AO : CO (i.e., ratio of bases)

From (1) above, we get $\frac{AO}{CO} = \frac{AB}{CD} = \frac{1}{2}$ Choice (A)

undefined

Q27. DIRECTIONS *for questions 21 to 28:* Select the correct alternative from the given choices.

If $5a^2 + 9b^2 + 9c^2 = 6a(2b + c)$, which of the following statements is/are necessarily true?

I. $b = 2c$

II. $2a = 3b$

- a) **Only I**
- b) **Only II**
- c) **Both I and II**
- d) **Neither I nor II**

You did not answer this question Show Correct Answer

Time spent / Accuracy Analysis

Time taken by you to answer this question	**166**
Avg. time spent on this question by all students	**141**
Difficulty Level	**M**
Avg. time spent on this question by students who got this question right	**135**
% of students who attempted this question	**14.92**
% of students who got the question right of those who attempted	**40.35**

Video Solution

Text Solution

$5a^2 + 9b^2 + 9c^2 = 6a(2b + c)$
$\Rightarrow a^2 + 4a^2 + 9b^2 + 9c^2 - 12ab - 6ac = 0$
$[a^2 + (3c)^2 - 6ac] + [(2a)^2 + (3b)^2 - 12ab] = 0$
$\Rightarrow (a - 3c)^2$ and $(2a - 3b)^2$ are positive.
$(a - 3c)^2 = 0$ and $(2a - 3b)^2 = 0$
$\Rightarrow a = 3c$ and $2a = 3b \Rightarrow 2(3c) = 3b \Rightarrow b = 2c$
$\therefore b = 2c$, $2a = 3b$ and $a \neq b$ Choice (C)

undefined

Q28. DIRECTIONS *for questions 21 to 28:* Select the correct alternative from the given choices.

In a 400 m race, Ravi gives Bharath a headstart of 40 m and beats him by 40 m. If Ravi completed the race in 20 seconds, what is the speed of Bharath?

- a) **12 m/s**
- b) **15 m/s**
- c) **16 m/s** **Your answer is correct**
- d) **20 m/s**

Time spent / Accuracy Analysis

Time taken by you to answer this question	**73**
Avg. time spent on this question by all students	**113**
Difficulty Level	**VE**
Avg. time spent on this question by students who got this question right	**110**
% of students who attempted this question	**39.32**
% of students who got the question right of those who attempted	**82.69**

Video Solution

Text Solution

When Ravi finishes the race, Bharath would have run
$400 - (40 + 40) = 320$ m
Time taken = 20 seconds
$\therefore$ Bharath's speed = $\frac{320}{20} = 16$ m/s Choice (C)

undefined

Q29. DIRECTIONS *for question 29:* Type in your answer in the input box provided below the question.

In a triangle ABC, if AB = 6 units, BC = 8 units, and CA = 12 units, find the area (in sq. units) of the triangle.

Enter your answer as a decimal value, rounded off to two decimal places.

Your Answer:21.33 **Your answer is correct**

Time spent / Accuracy Analysis

Time taken by you to answer this question	**129**
Avg. time spent on this question by all students	**123**
Difficulty Level	**E**
Avg. time spent on this question by students who got this question right	**108**
% of students who attempted this question	**33.91**
% of students who got the question right of those who attempted	**54.4**

Video Solution

Text Solution

The semiperimeter of the triangle ABC

$s = \frac{6+8+12}{2} = 13$ units

Area of the triangle ABC = $\sqrt{(s)(s-a)(s-b)(s-c)}$

$= \sqrt{(13)(13-6)(13-8)(13-12)}$

$= \sqrt{(13)(7)(5)(1)} = \sqrt{455} = 21.331$ sq units.

21.331 rounded off two decimal places

= 21.33. Ans: (21.33)

undefined

Q30. DIRECTIONS *for questions 30 and 31:* Select the correct alternative from the given choices.

If *a* and *b* are integers, 5*a* + 23*b* = 58 has

- a) **no solution for *a* < 280 and *b* < 0.**
- b) **no solution for *a* > 260 and *b* > −60.**
- c) **a solution for 260 < *a* < 285.**
- d) **a solution for −67 < *b* < −64.**

You did not answer this question Show Correct Answer

Time spent / Accuracy Analysis

Time taken by you to answer this question	**6**
Avg. time spent on this question by all students	**136**
Difficulty Level	**D**
Avg. time spent on this question by students who got this question right	**162**
% of students who attempted this question	**8.01**
% of students who got the question right of those who attempted	**38.64**

Video Solution

Text Solution

$$\frac{5a}{23} + b = \frac{58}{23}$$

Remainder of $\frac{58}{23}$ is 12. ∴ Remainder of $\frac{5a}{23}$ should also be 12.

The smallest value of a for which this is true is 7. The other values of a are obtained by adding multiples of 23 to 7.

∴ a = 7 + 23t. Substituting in the equation, b = 1 – 5t

Choice (A)

For any positive value of t, b will be negative. If t ≤ 11, a < 260. ∴Choice (A) is false.

Choice (B)

In a similar manner we can conclude that Choice (B) is also false.

Choice (C)

If Choice (C) is true, 260 < 7 + 23t <285

or $11 < t < 12\frac{2}{23}$

∴ t = 12 results in 260 < a < 285.

∴ Choice (C) is true.

Choice (D)

If Choice (D) is true, –67 < 1 – 5t < –64

or 65 < 5t < 68.

As t has no possible value, Choice (D) is false.

∴ Only Choice (C) is true. Choice (C)

undefined

Q31. DIRECTIONS *for questions 30 and 31:* Select the correct alternative from the given choices.

The tens digit of $(23)^{24} \times (25)^{26}$ is

- a) **3.**
- b) **2.** **Your answer is correct**
- c) **5.**
- d) **7.**

Time spent / Accuracy Analysis

Time taken by you to answer this question	**246**
Avg. time spent on this question by all students	**103**
Difficulty Level	**M**
Avg. time spent on this question by students who got this question right	**116**
% of students who attempted this question	**22.25**
% of students who got the question right of those who attempted	**54.3**

Video Solution

Text Solution

$(25)^{26} \times (23)^{24}$
$(25 \times 23)^{24} \times (25)^2 = (575)^{24} \times (25)^2$
575 to the power of 24 will have the same last two digits as 75 to the power of 24 (or any even number). This always equals 25. Hence the last two digits of the product of $(575)^{24}$ and $(25)^2$ will be 25. Hence the tens digit of the product is 2.

Alternative solution:

$(23)^{24}$ is of the form $(4k + 3)^{24}$, which in turn is of the form $(4m + 1)^{12}$ which in turn is of the form $4n + 1$.
$(25)^a$ always ends with 25.
$\therefore$ The last two digits of $(23)^{24} \times (25)^{26}$ is equal to the last two digits of $(4n + 1)$ (25) i.e., 25.
$\therefore$ Required digit is 2. Choice (B)

undefined

Q32. DIRECTIONS *for question 32:* Type in your answer in the input box provided below the question.

The work done by two men in six days is equal to the work done by four women in nine days. How many women are required to do a piece of work in 32 days, if 12 men could do the same piece of work in 48 days?

Your Answer:54 **Your answer is correct**

Time spent / Accuracy Analysis

Time taken by you to answer this question	**215**
Avg. time spent on this question by all students	**150**
Difficulty Level	**E**
Avg. time spent on this question by students who got this question right	**140**
% of students who attempted this question	**28.15**
% of students who got the question right of those who attempted	**52.53**

Video Solution

Text Solution

Work done by 2 men in 6 days
= Work done by 4 women in 9 days
12 man days = 36 women days _____ (1)
1 man day = 3 women days.
Work to be done
= 12 × 48 man days
= 12 × 48 × 3 women days
As work is to be completed in 32 days.
$x = \frac{12 \times 48 \times 3}{32}$ = 54 women. Ans: (54)

undefined

Q33. DIRECTIONS *for questions 33 and 34:* Select the correct alternative from the given choices.

The curves $b = \log_{10} a$ and $b = a^{-1}$ are drawn in the $a - b$ plane. How many times do they intersect for $a \geq 1$?

a) **Zero**

b) **One**

c) **Three**

d) **Two**

You did not answer this question Show Correct Answer

Time spent / Accuracy Analysis

Time taken by you to answer this question	**56**
Avg. time spent on this question by all students	**80**
Difficulty Level	**M**
Avg. time spent on this question by students who got this question right	**85**
% of students who attempted this question	**8.61**
% of students who got the question right of those who attempted	**64.46**

Video Solution

Text Solution

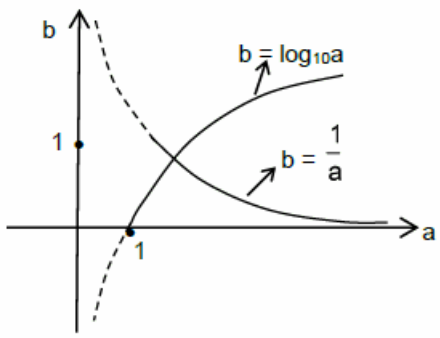

As can be seen from the above figure, the two curves intersect exactly once.

Choice (B)

undefined

Q34. DIRECTIONS *for questions 33 and 34:* Select the correct alternative from the given choices.

In a class, when the students were asked about their preferences of three fruits − Apple, Banana and Mango, 78% of them liked at least one among the three fruits. 50% of the class liked apples, 30% liked bananas and 20% liked mangoes. If 6% of the students in the class liked all the three fruits, what percentage of the students in the class liked more than one fruit?

a) **10%**

b) **22%**

c) **16%**

d) **15%**

You did not answer this question Show Correct Answer

Time spent / Accuracy Analysis

Time taken by you to answer this question	**20**
Avg. time spent on this question by all students	**202**
Difficulty Level	**M**
Avg. time spent on this question by students who got this question right	**208**
% of students who attempted this question	**14.53**
% of students who got the question right of those who attempted	**50.69**

Video Solution

Text Solution

Let x, y and z be the percentage of people who liked exactly two fruits i.e., apples and mangoes, bananas and mangoes, apples and bananas respectively.
Then, $50 + 30 + 20 - (p + q + r) - (2 \times 6) = 78$
$\Rightarrow p + q + r = 10$
Percentage of students in the class who liked more than 1 fruit = $p + q + r + 6 = 16$.

Alternative Solution:

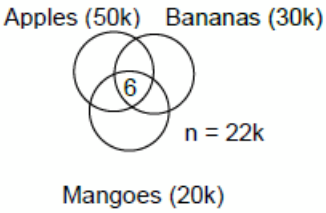

Let the total number of people be 100k.
People who like apples = 50k
bananas = 30k
mangoes = 20k
Adding all three, we'll get 50k + 30k + 20k = (people who like exactly one fruit)
+ 2 x (People who liked exactly 2 fruits)
+3 x (People who liked all 3 fruits)
50k + 30k + 20k = (exactly 1) + 2 (exactly 2) + 18k ____(1)
78% like at least one fruit
78k = exactly 1 + exactly 2 + exactly 3
78k = exactly 1 + exactly 2 + 6k ____(2)
Solving equations (1) & (2), we have
Exactly 1 = 62k
Exactly 2 = 10k
People who liked more than one fruit
= 10k + 6k = 16%

Choice (C)