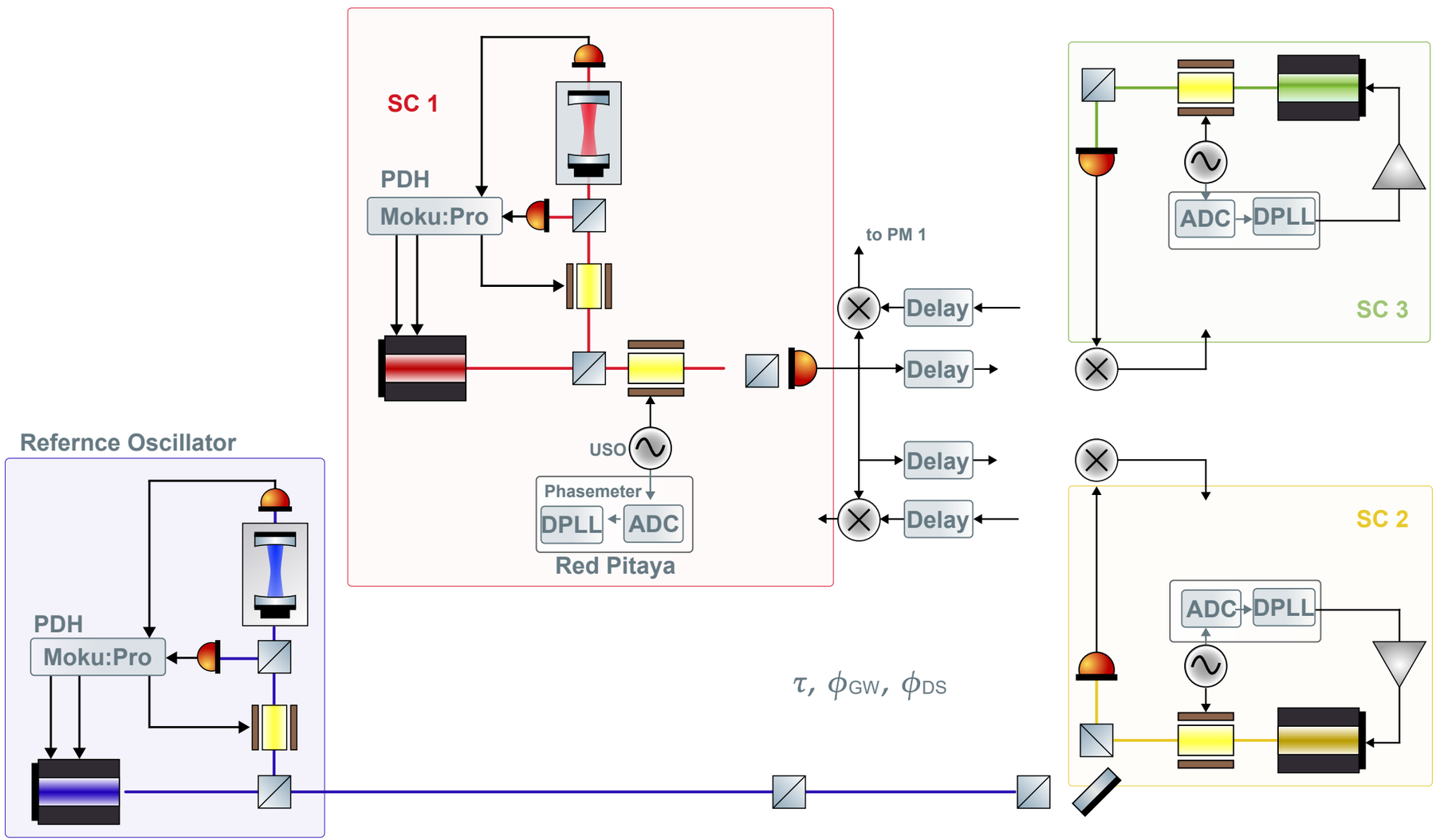
SC 1
PDH
Moku:Pro
USO
Phasemeter
DPLL
ADC
Red Pitaya
to PM 1
Delay
Delay
Delay
Delay
SC 3
ADC
DPLL
SC 2
ADC
DPLL
Refernce Oscillator
PDH
Moku:Pro
τ, ϕ_{GW}, ϕ_{DS}

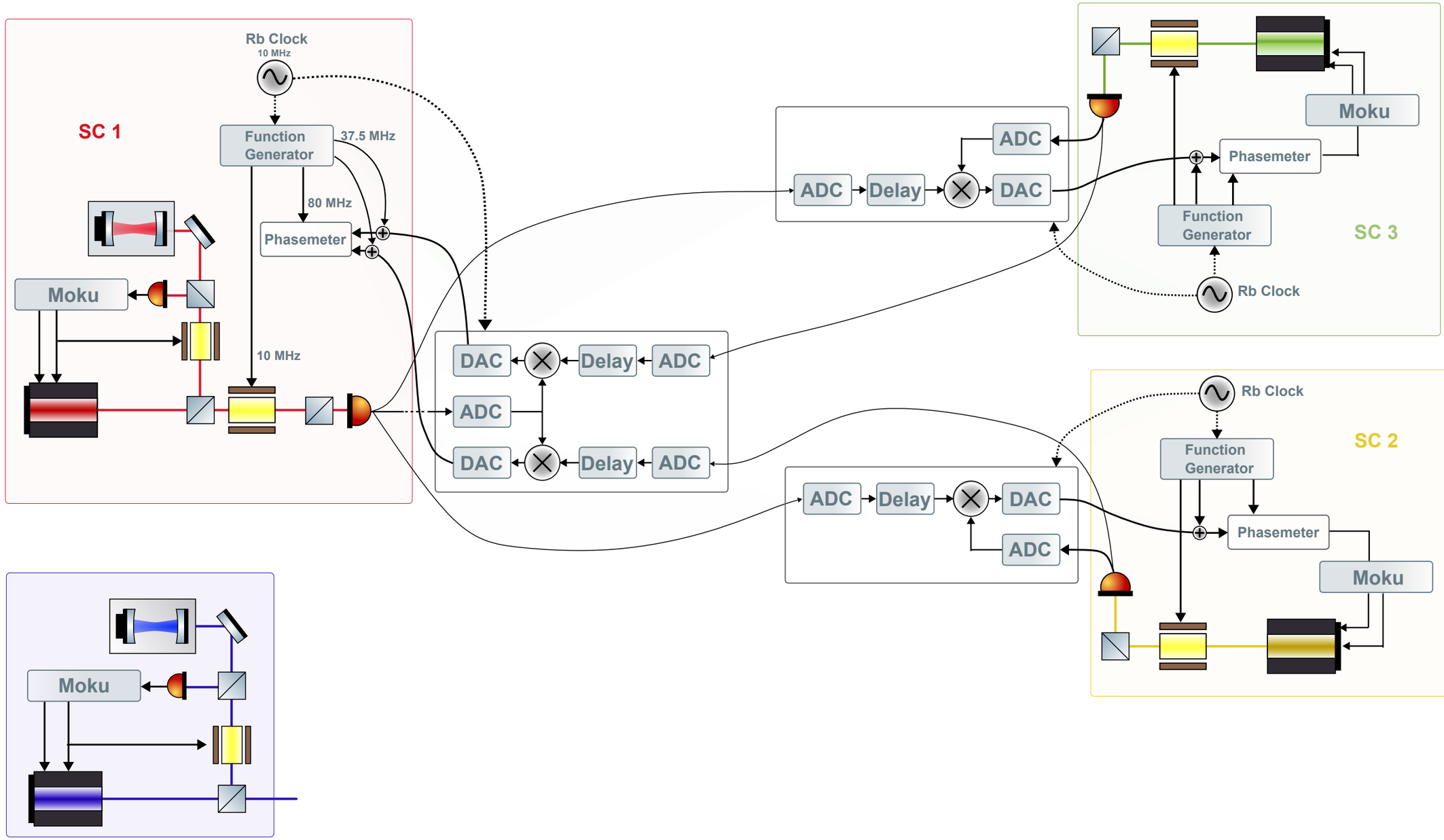
SC 1
Rb Clock
10 MHz
Function Generator
37.5 MHz
80 MHz
Phasemeter
Moku
10 MHz
DAC
Delay
ADC
ADC
DAC
Delay
ADC
ADC
Delay
DAC
ADC
ADC
Delay
DAC
ADC
Moku
Phasemeter
Function Generator
SC 3
Rb Clock
Rb Clock
Function Generator
SC 2
Phasemeter
Moku
Moku