TDI Testbed

Karin Kruuse

06.02.2024

THE SPECTRUM OF GRAVITATIONAL WAVES

esa

Observatories & experiments

Ground-based experiment

Space-based observatory

Pulsar timing array

Cosmic microwave background polarisation

Timescales

milliseconds | seconds | hours | years | billions of years

Frequency (Hz)

100 | 1 | 10^{-2} | 10^{-4} | 10^{-6} | 10^{-8} | 10^{-16}

Cosmic fluctuations in the early Universe

Cosmic sources

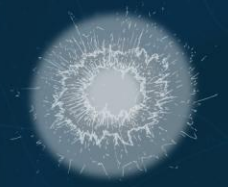

Supernova

Pulsar

Compact object falling onto a supermassive black hole

Merging supermassive black holes

Merging neutron stars in other galaxies

Merging stellar-mass black holes in other galaxies

Merging white dwarfs in our Galaxy

ESA | NASA lisa

#lisa

LISA

- Space-based gravitational wave detector
- Three satellites surrounding six test masses in free fall
- No seismic noise and unlimited arm length are good for signal sensitivity.
- The arm-lengths are time-varying
  - which means laser noise won't (easily) cancel out
  - and the laser fields experience Doppler shifts in the range from -10 to 10 MHz

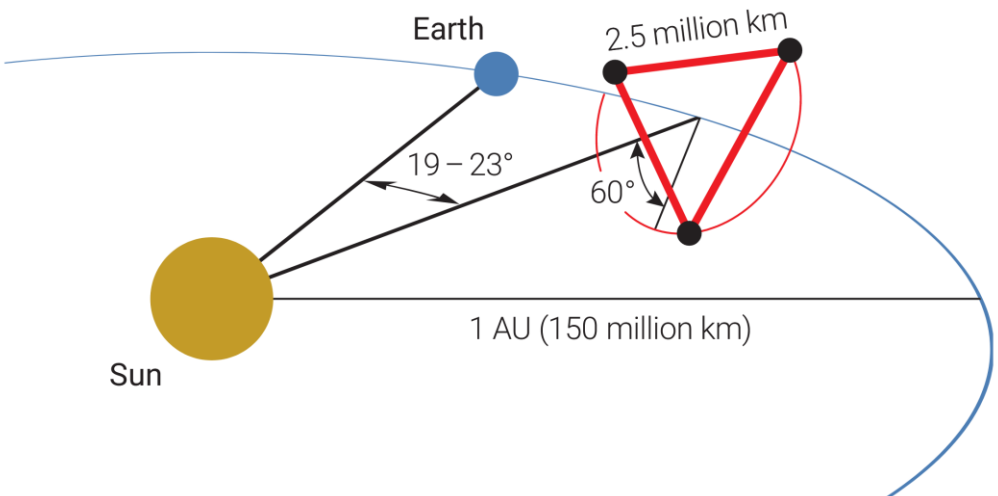

Amaro-Seoane et al., 2017

The Constellation

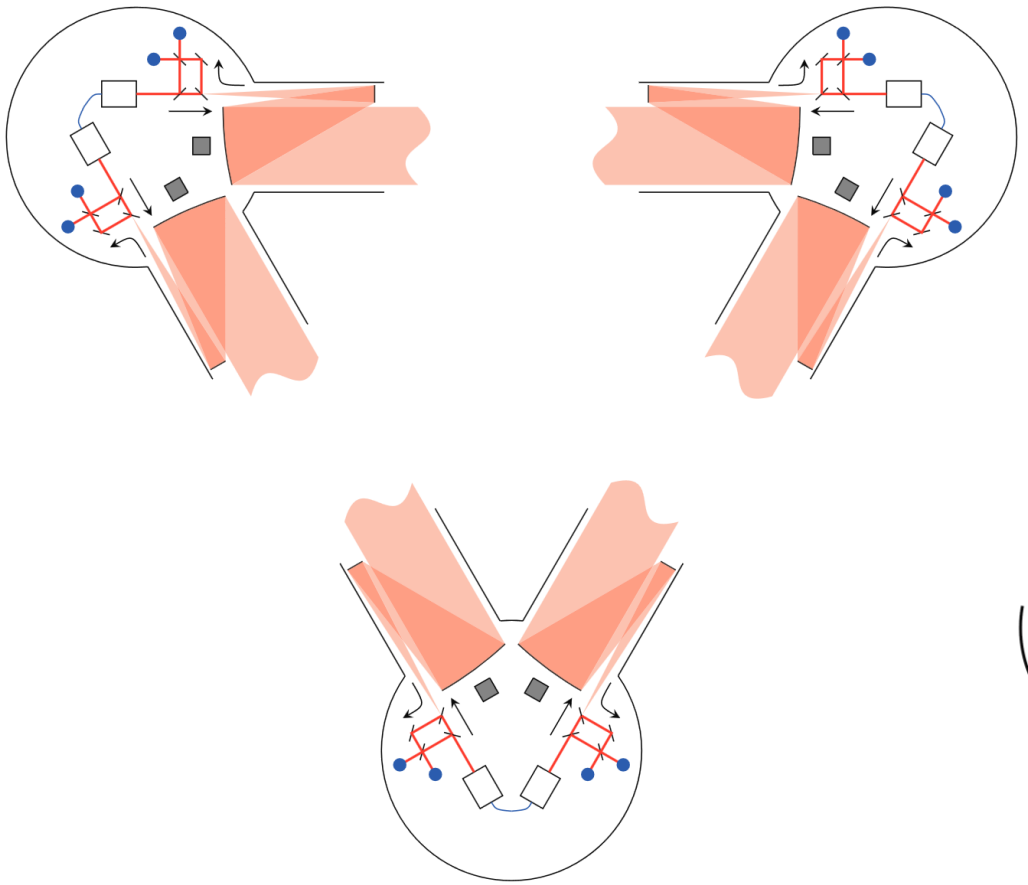

split interferometry

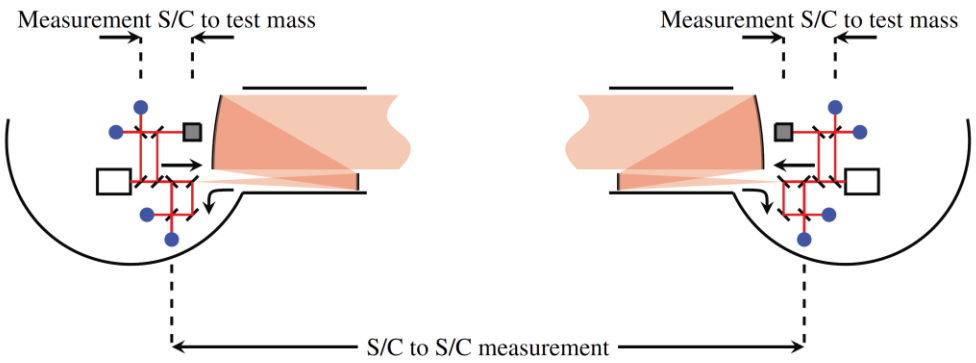

Jennrich, 2010

Internals of a LISA Spacecraft

Half of the internas

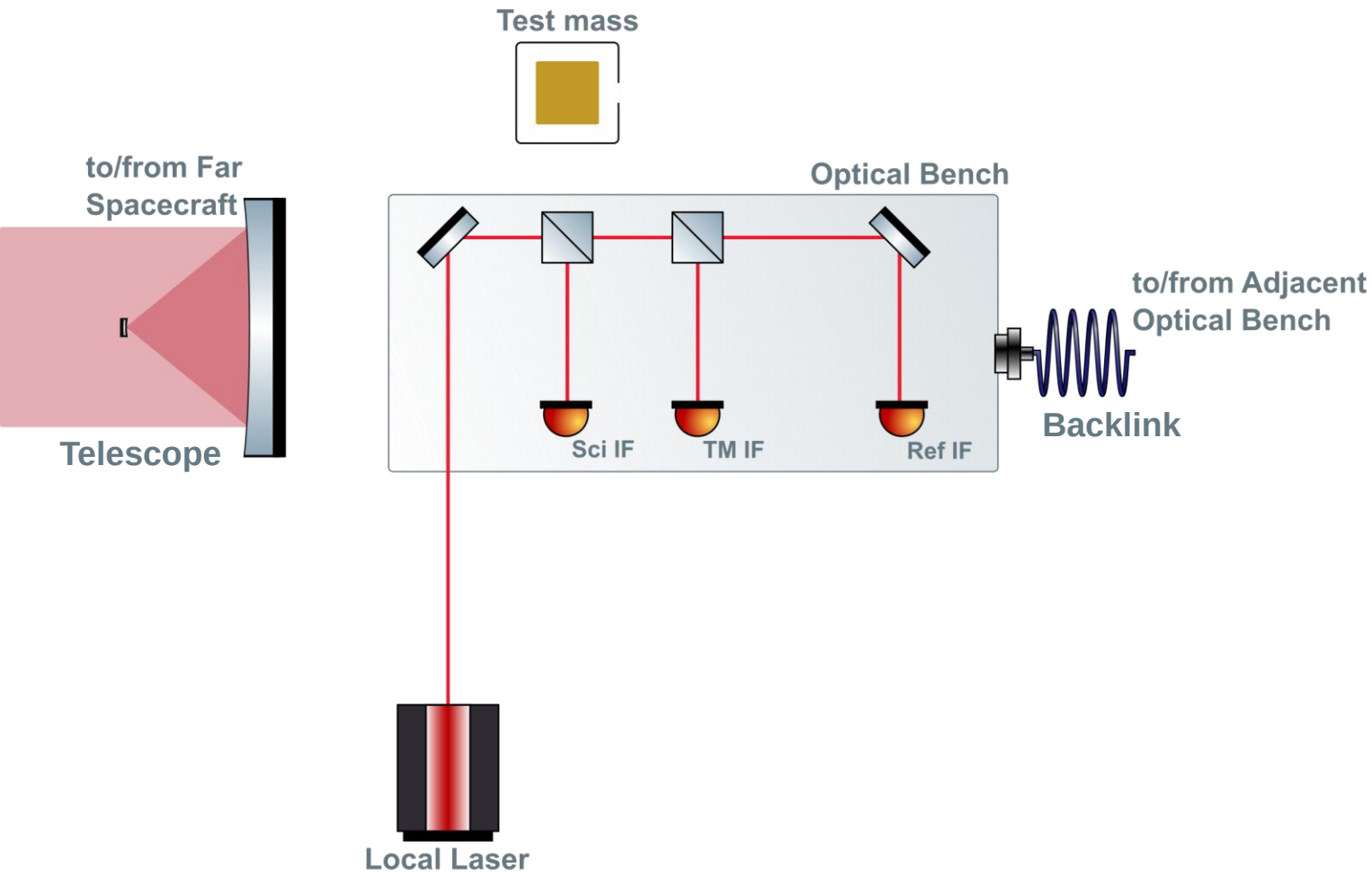

Internals of a LISA Spacecraft

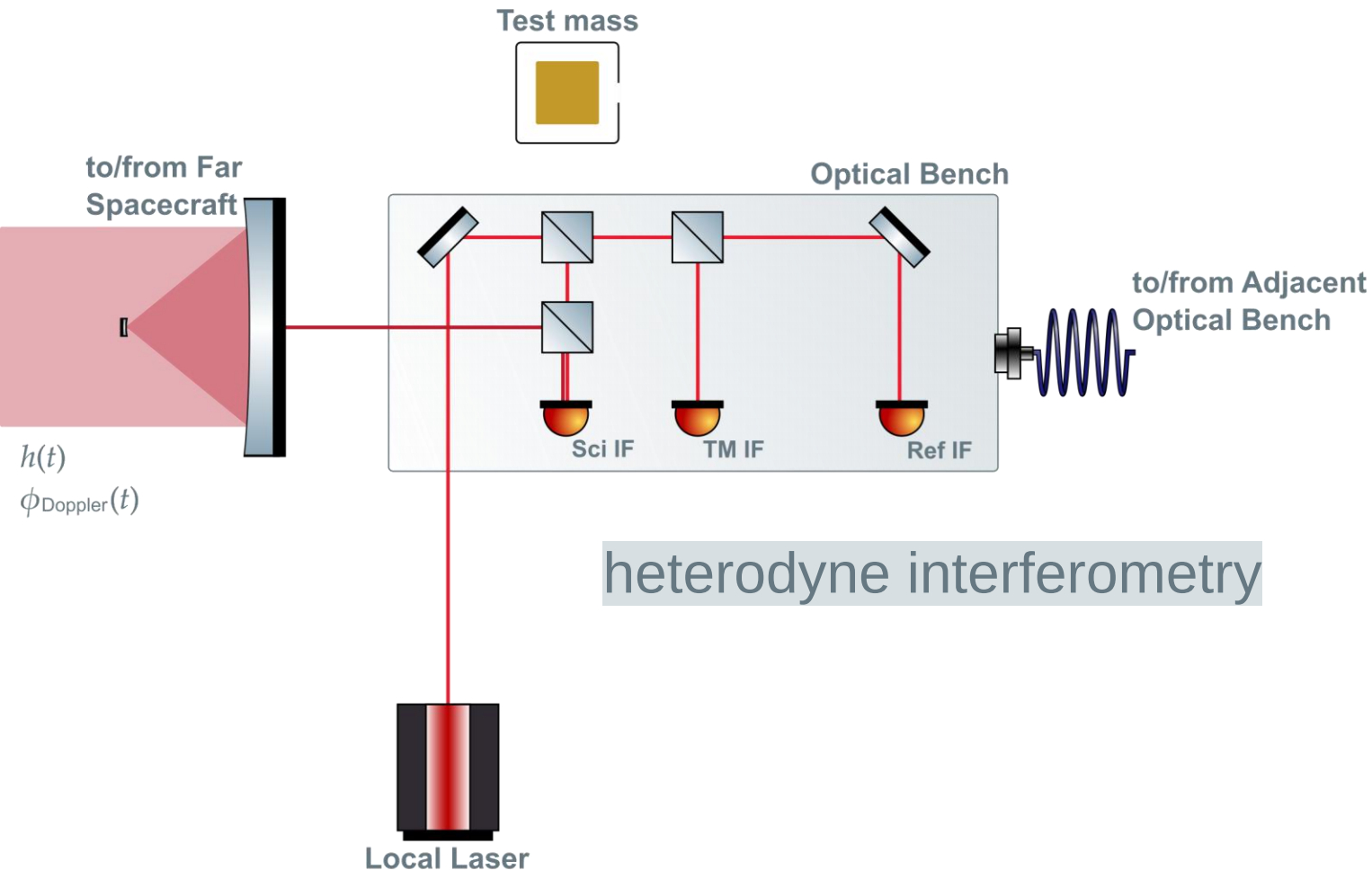

heterodyne interferometry

Internals of a LISA Spacecraft

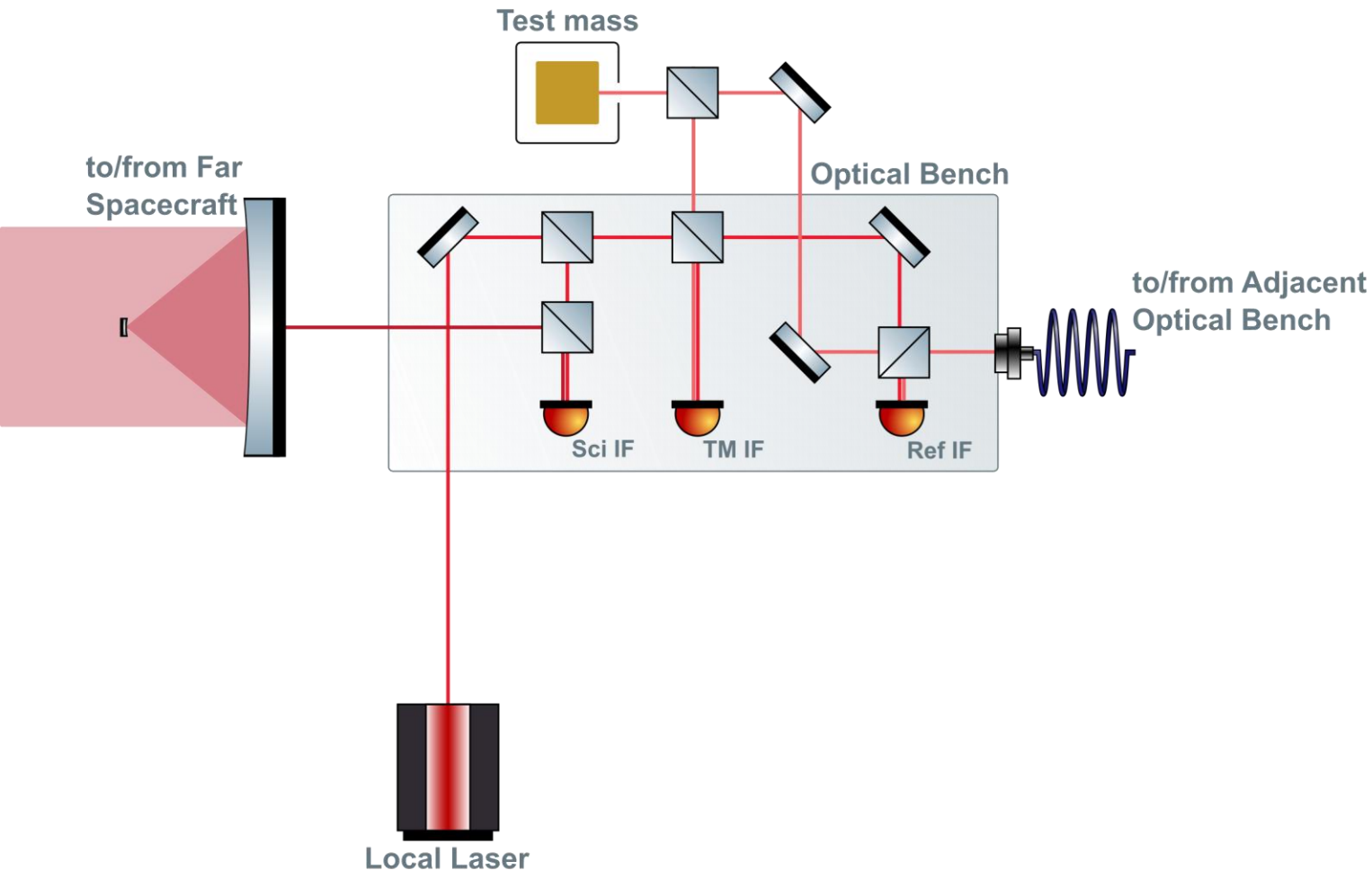

Internals of a LISA Spacecraft

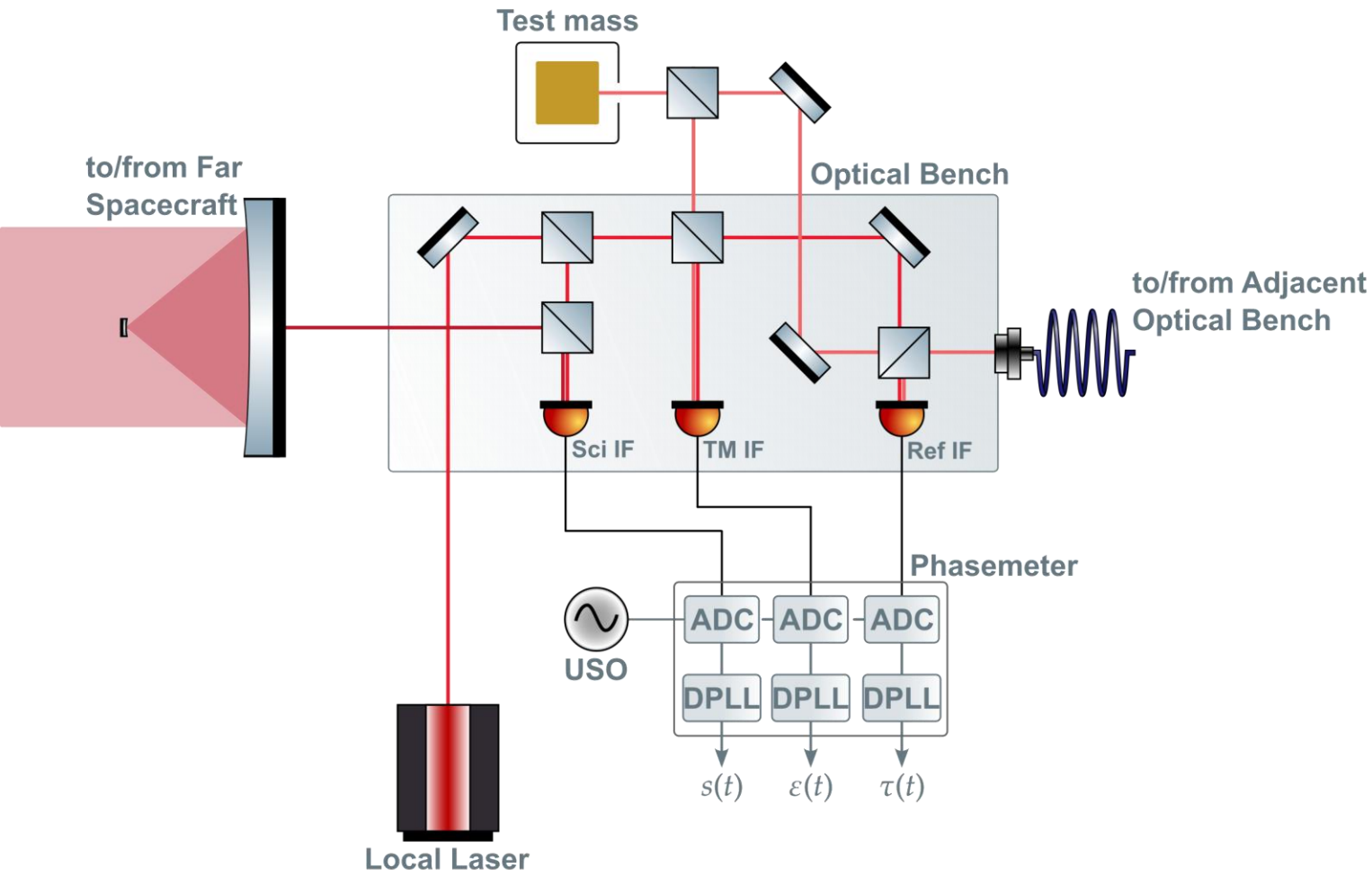

USO – Ultra Stable Oscillator

Frequency Planning

- The beatnotes must be at predefined frequencies
- The phasemeter is designed to be sensitive in the range from 5 to 25 MHz
- At lower frequencies laser noise is determined to be too high.
- At higher frequencies, the photodetector signals get noisier.
- Doppler shifts have to be accounted for
- Beatnote crossings should be avoided

Internals of a LISA Spacecraft

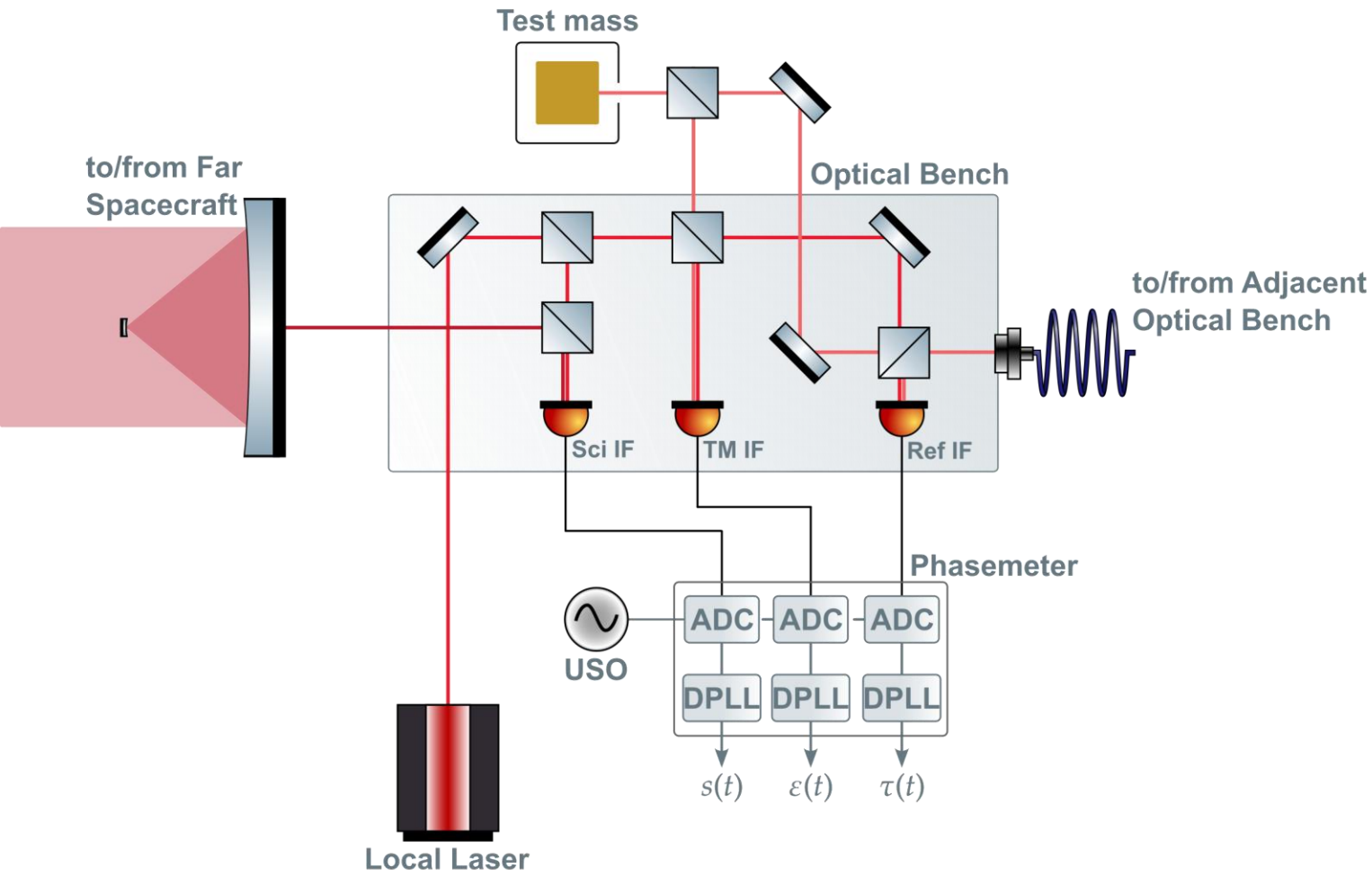

Internals of a LISA Spacecraft

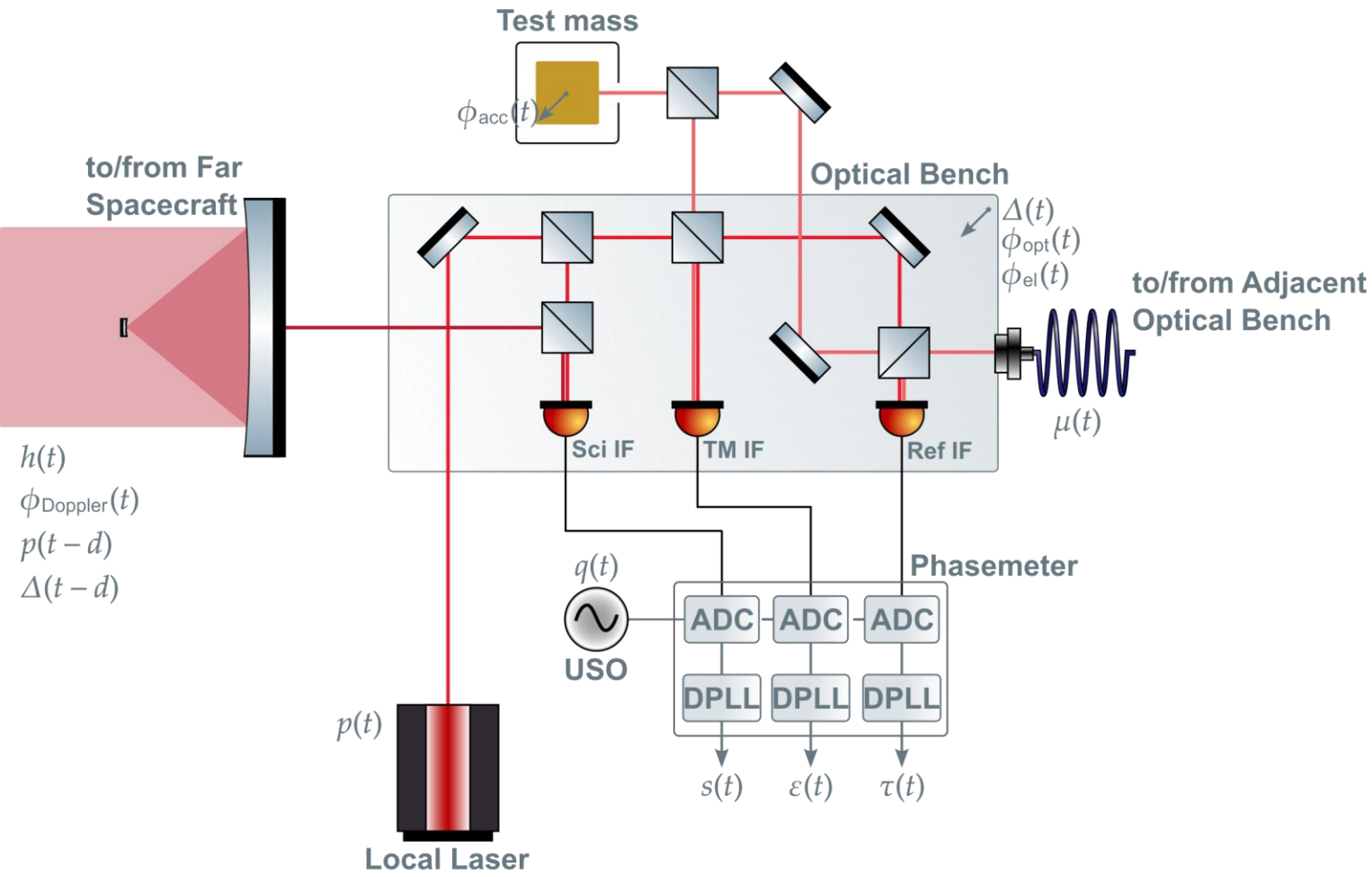

Internals of a LISA Spacecraft

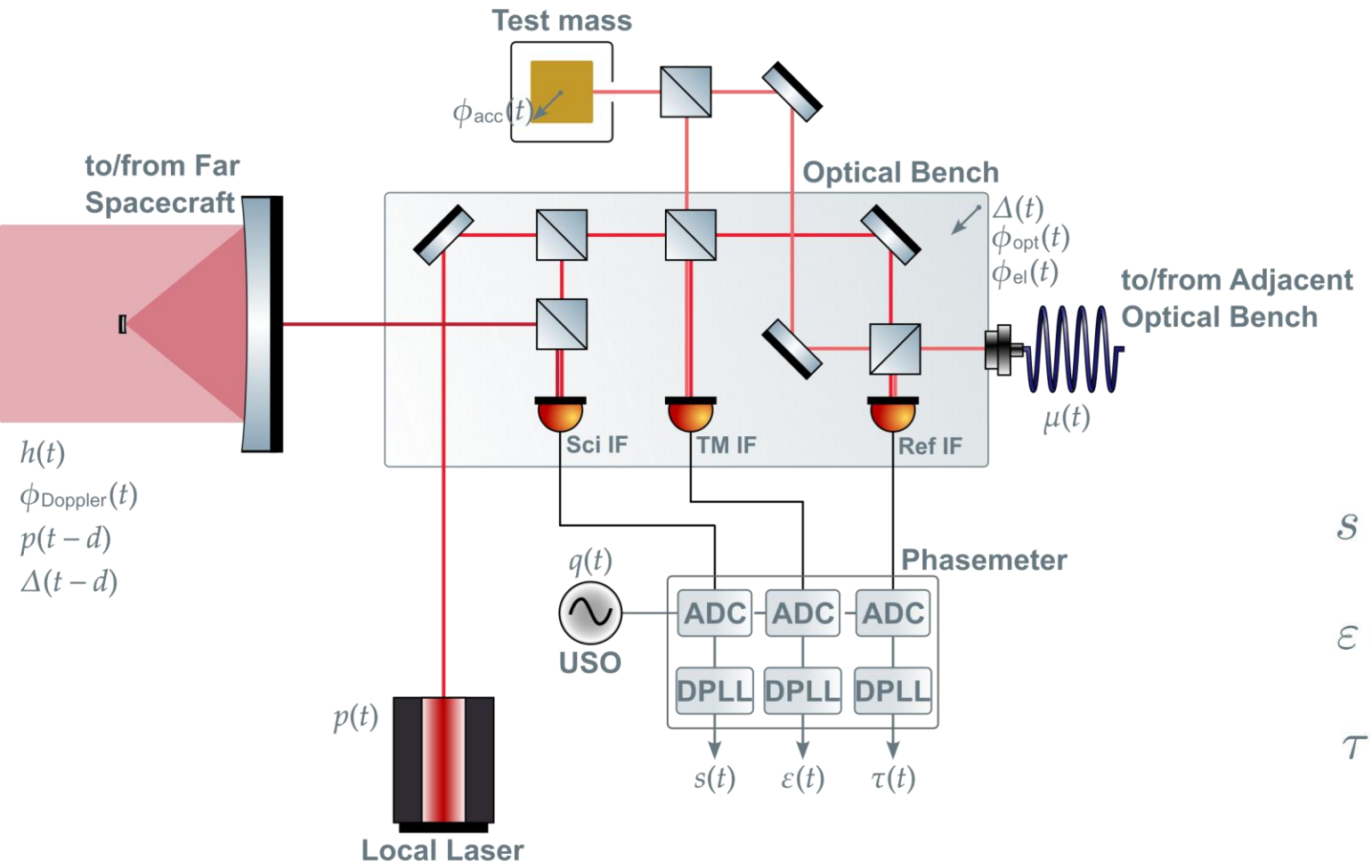

$$s = s(p_2, p_1, h, q_1, \mathbf{\Delta}_2, \mathbf{\Delta}_1, \phi_{\rm opt}, \phi_{\rm el})$$

$$\varepsilon = \varepsilon(p_1', p_1, q_1, \phi_{\rm acc1}, \mathbf{\Delta}_1, \phi_{\rm opt}^{\varepsilon}, \phi_{\rm el}^{\varepsilon}, \mu_1')$$

$$\tau = \tau(p_1', p_1, q_1, \phi_{\rm opt}^{\tau}, \phi_{\rm el}^{\tau}, \mu_1')$$

Problem: Laser Noise

- Phase must be measured at μrad precision
- This is orders of magnitude lower than the expected laser noise level in the beatnote measurements.

Solution: TDI

Construct virtual equal arms in post-processing.

The measurements are filtered and downsampled before they are sent to Earth and used in TDI.

Hartwig, 2021

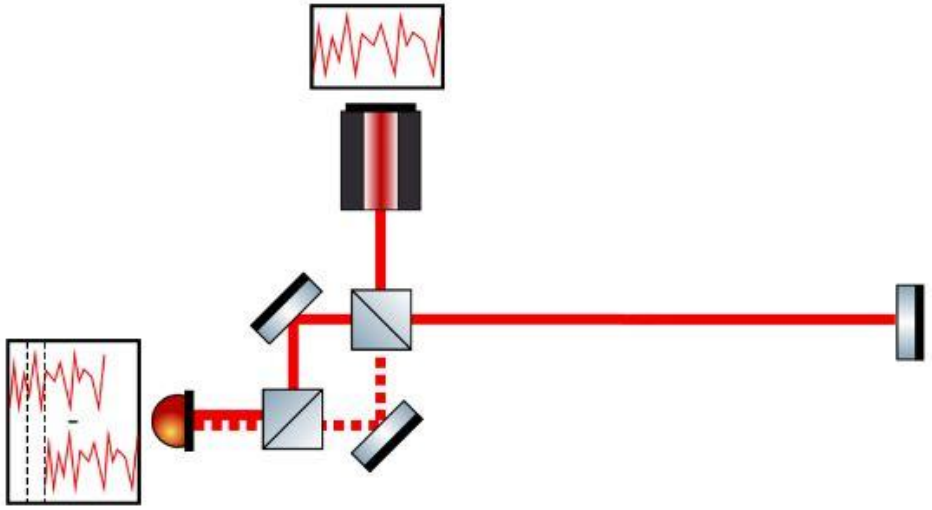

Transponder signal

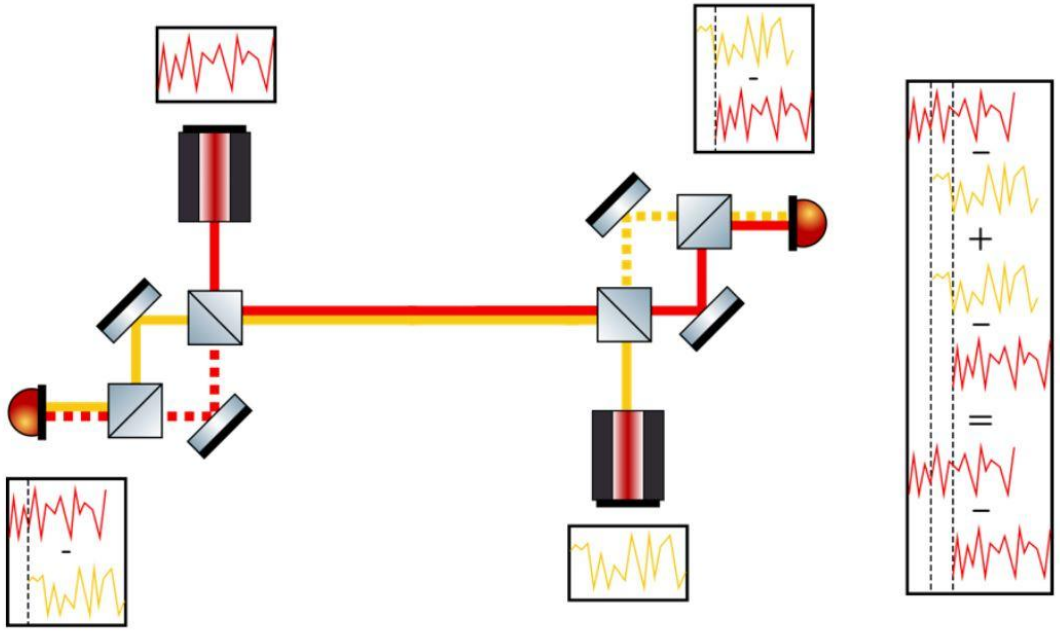

Virtual transponder signal

Solution: TDI

Hartwig, 2021

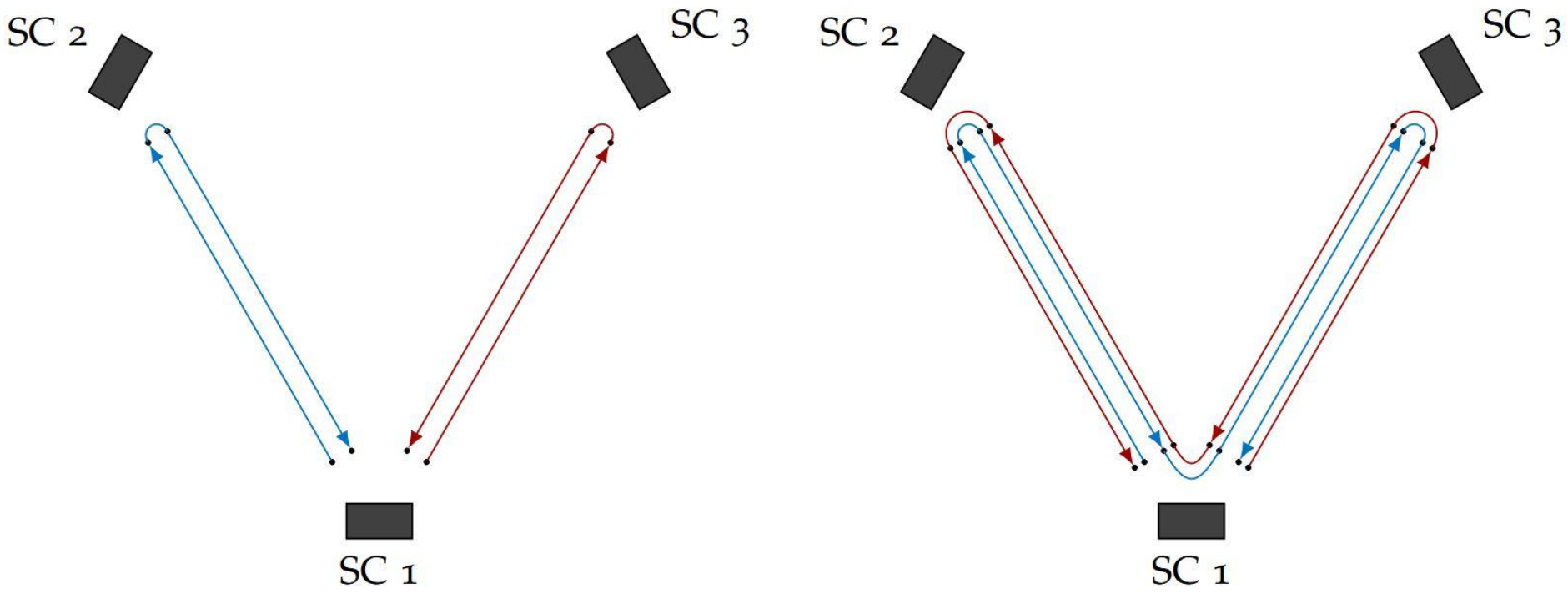

0th generation TDI X combination, equal unchanging arm lengths

In practice, 2nd generation combinations should suppress noise enough.

Problem: Clock Noise

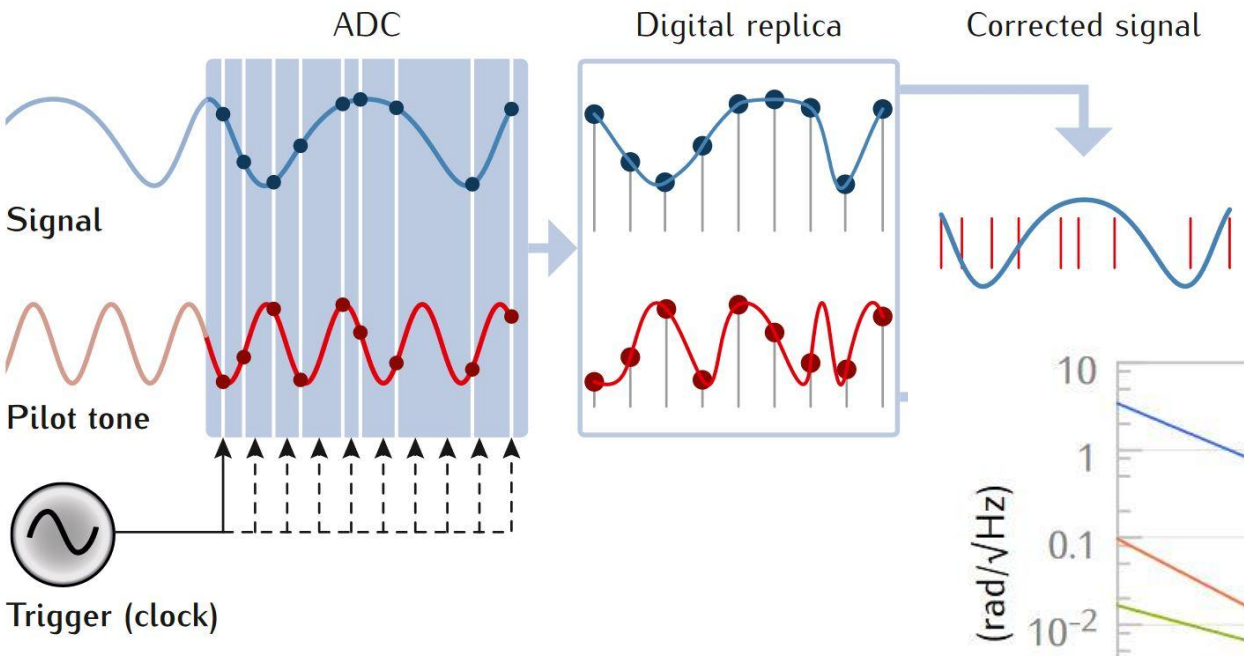

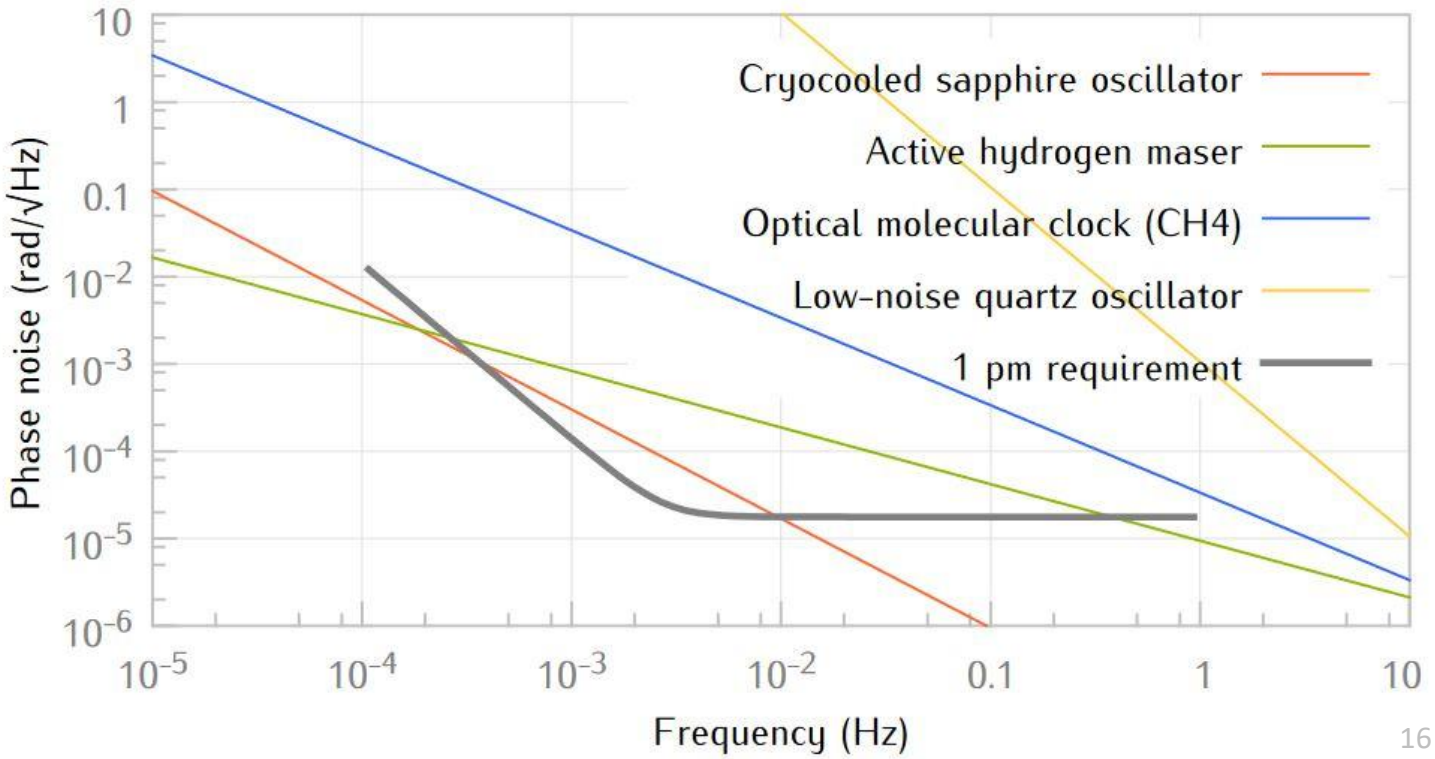

Lisa metrology system-final report, 2014

Solution: The sidebands

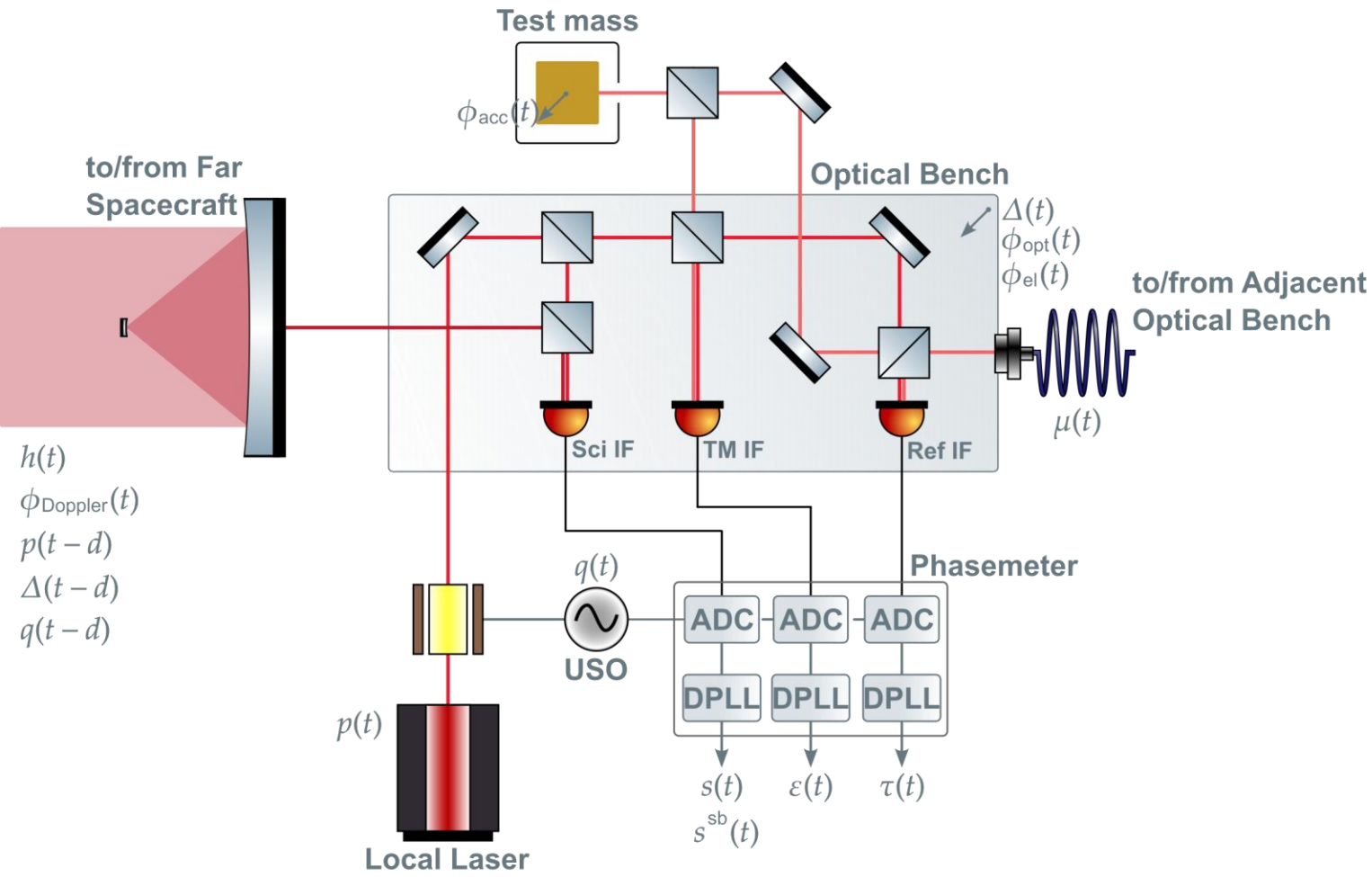

Solution: The sidebands

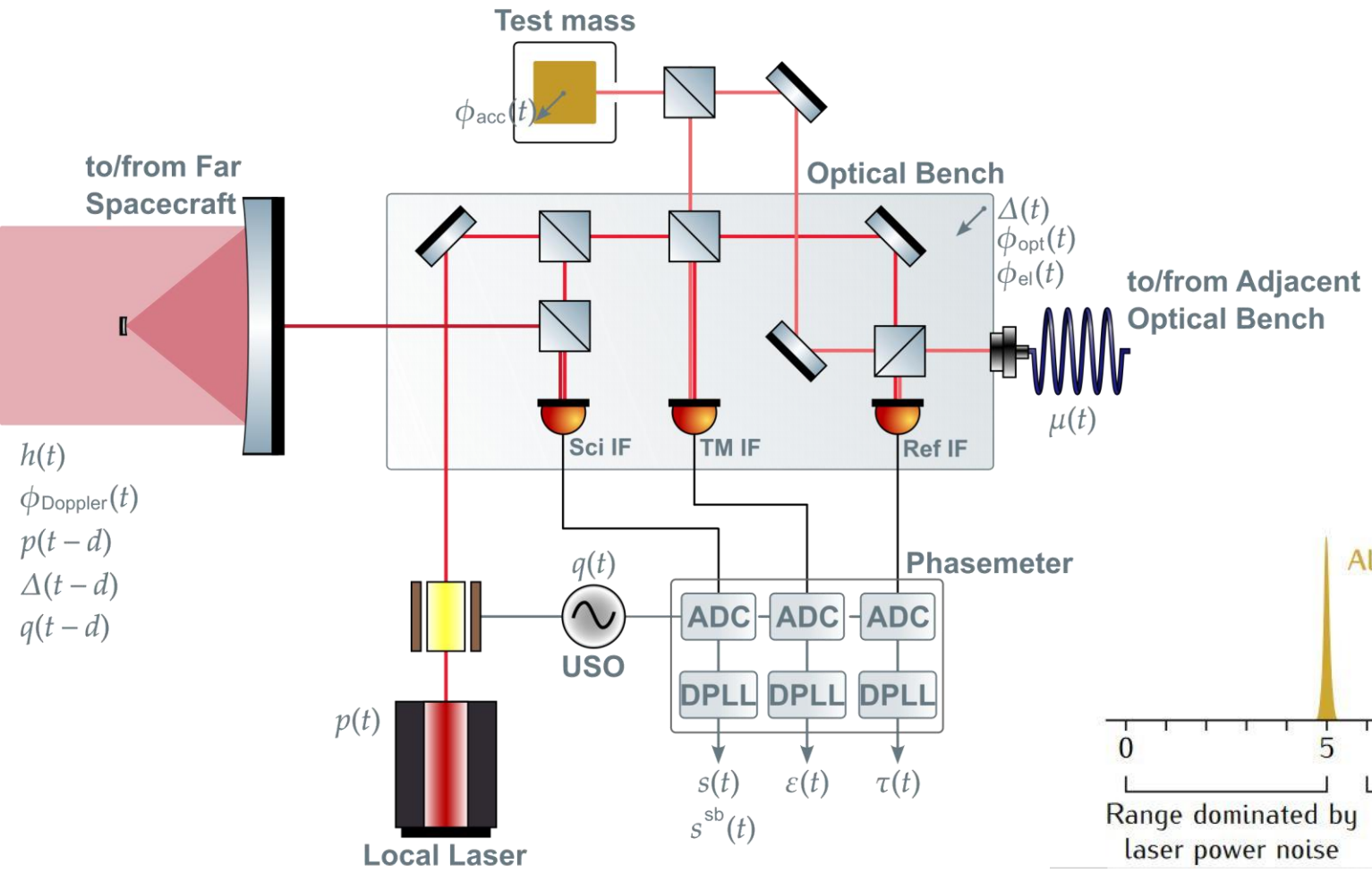

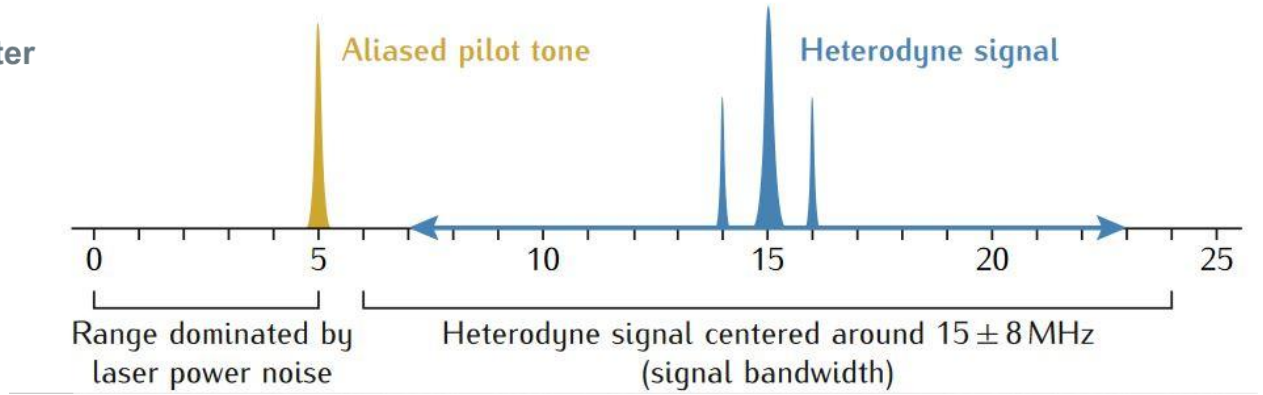

Lisa metrology system-final report, 2014

Previous Experiments

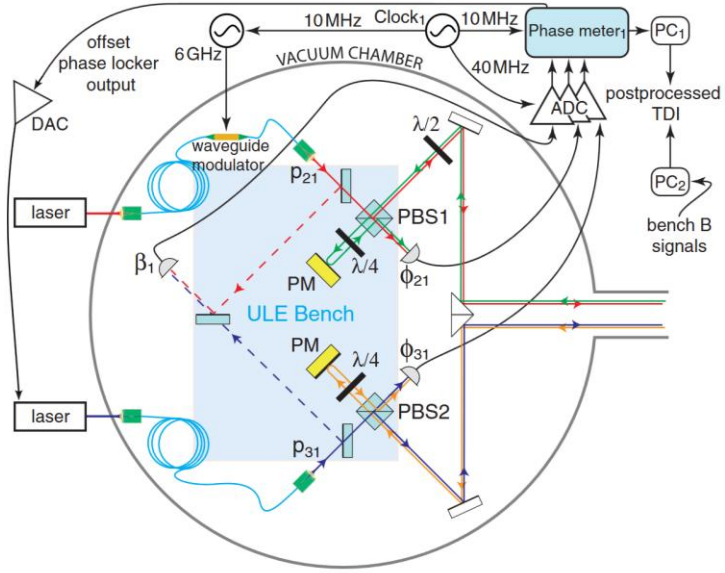

De Vine et al., 2010: Experimental Demonstration of Time-Delay Interferometry for LISA, JPL

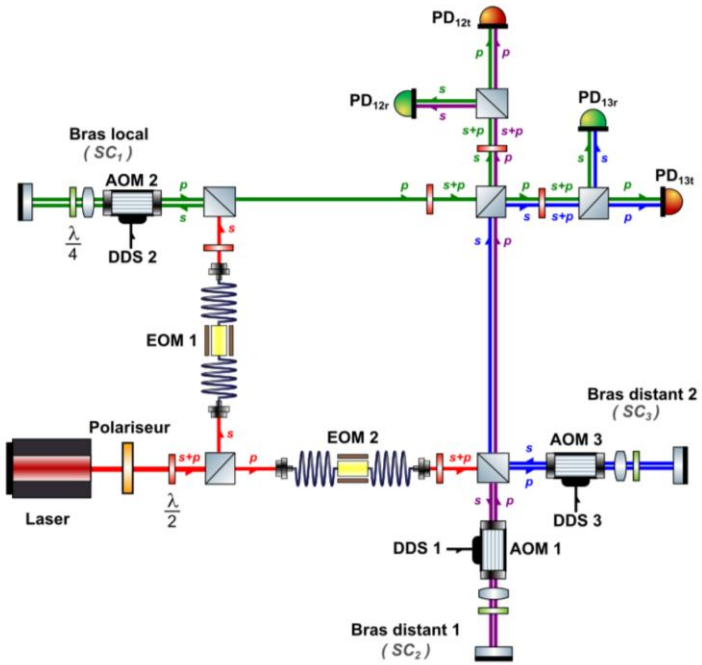

Vidal, 2023: Validation expérimentale des performances interférométriques de LISA, Paris

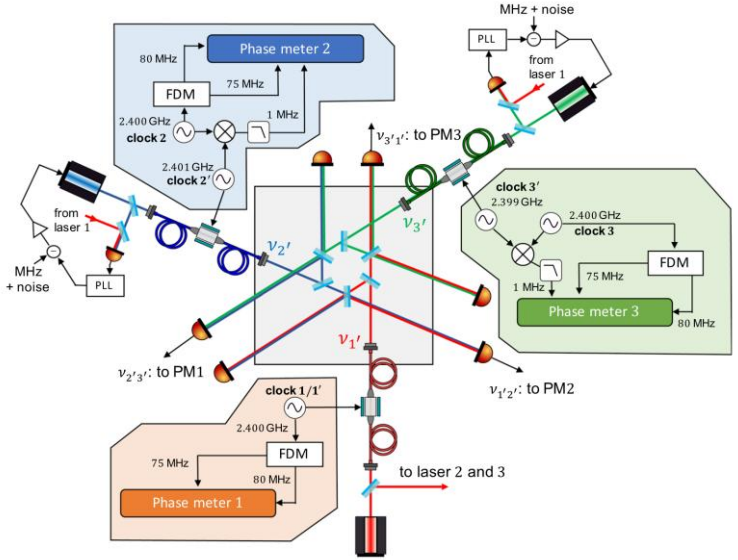

Yamamoto et al., 2022: Experimental Verification of Intersatellite Clock Synchronization at LISA Levels, Here

The UFLIS

The University of Florida Laser Interferometry Simulator

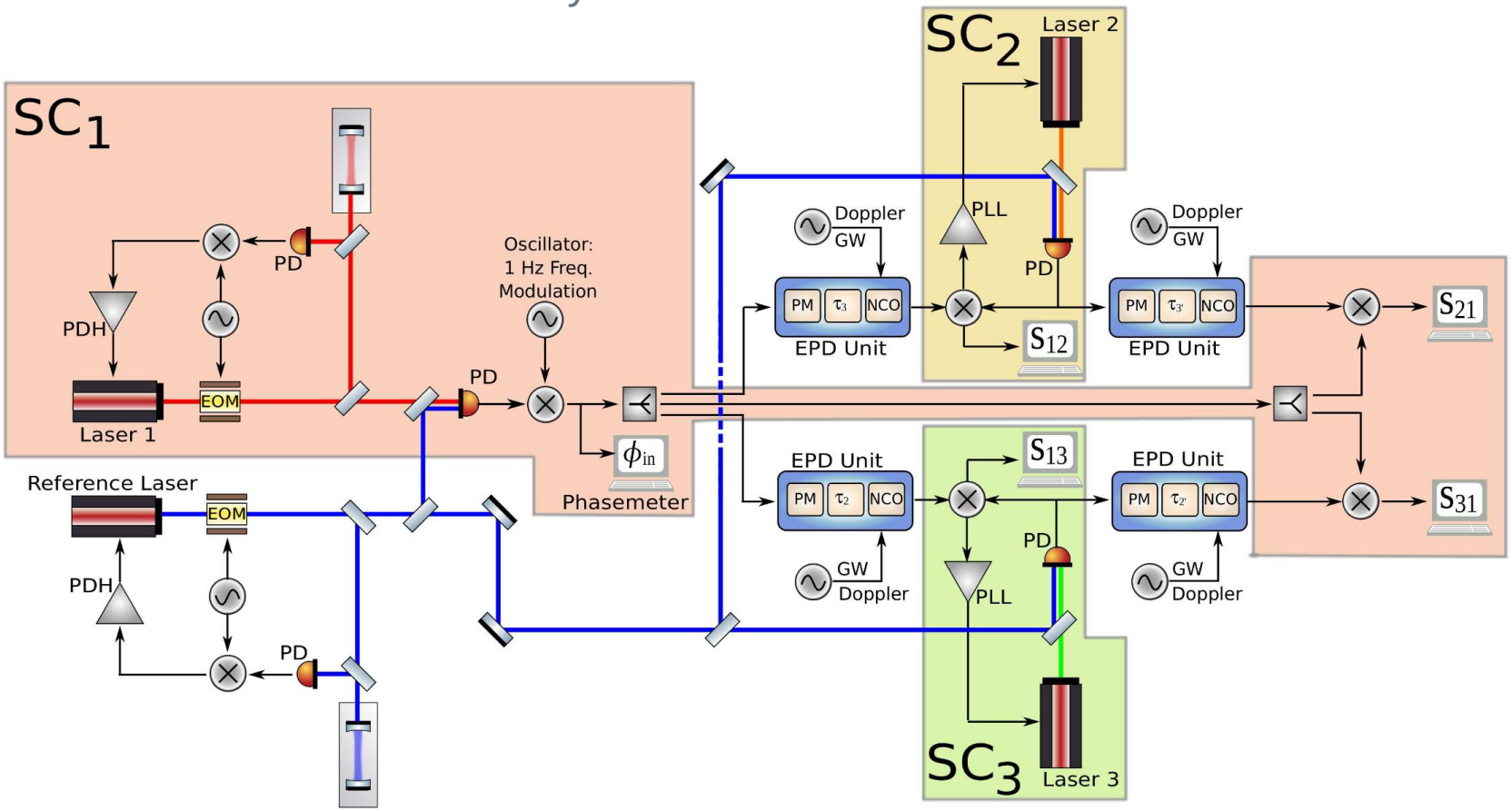

Mitryk, 2012

MiniLISA

- … aims to test TDI
- with clock sidebands
- and an actual, realistic delay in the beatnote

LISA Scienece Interferometer

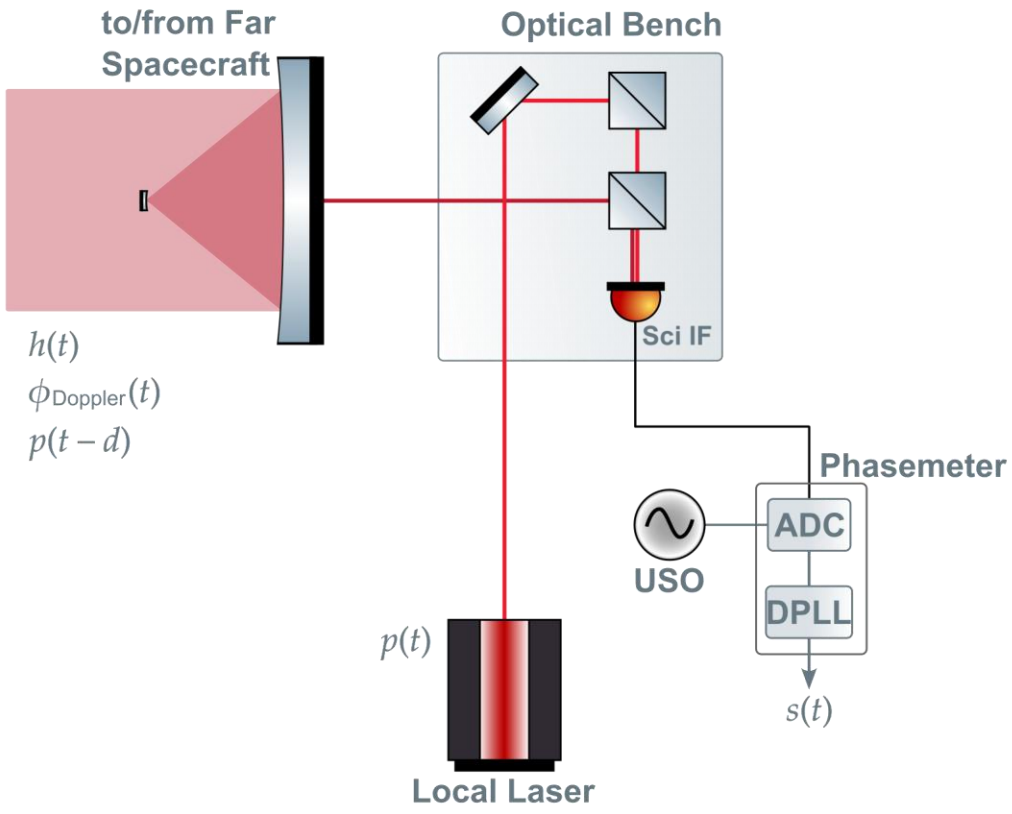

MiniLISA

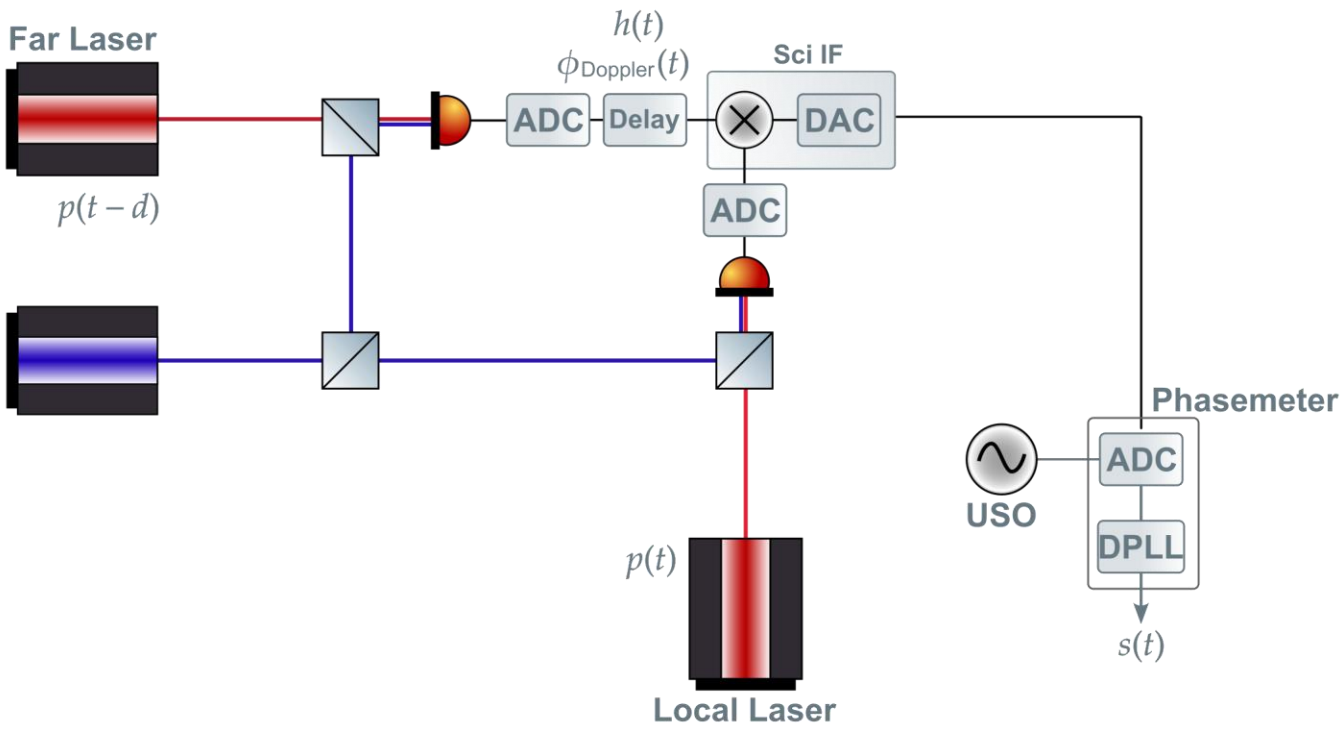
Far Laser
$p(t-d)$
$h(t)$
$\phi_{\text{Doppler}}(t)$
ADC
Delay
Sci IF
DAC
ADC
$p(t)$
Local Laser
USO
Phasemeter
ADC
DPLL
$s(t)$

MiniLISA

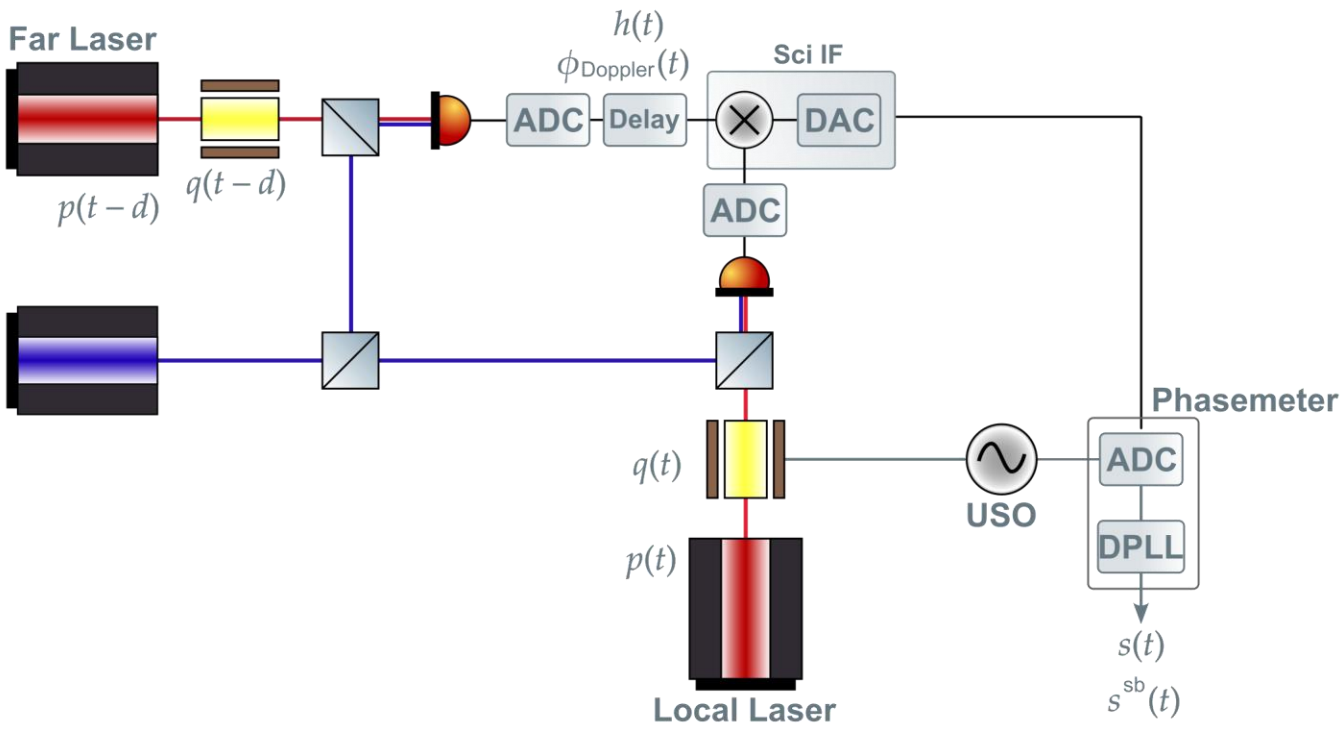
Far Laser
$p(t-d)$
$q(t-d)$
$h(t)$
$\phi_{\text{Doppler}}(t)$
ADC
Delay
Sci IF
DAC
ADC
$q(t)$
$p(t)$
Local Laser
USO
Phasemeter
ADC
DPLL
$s(t)$
$s^{\text{sb}}(t)$

MiniLISA

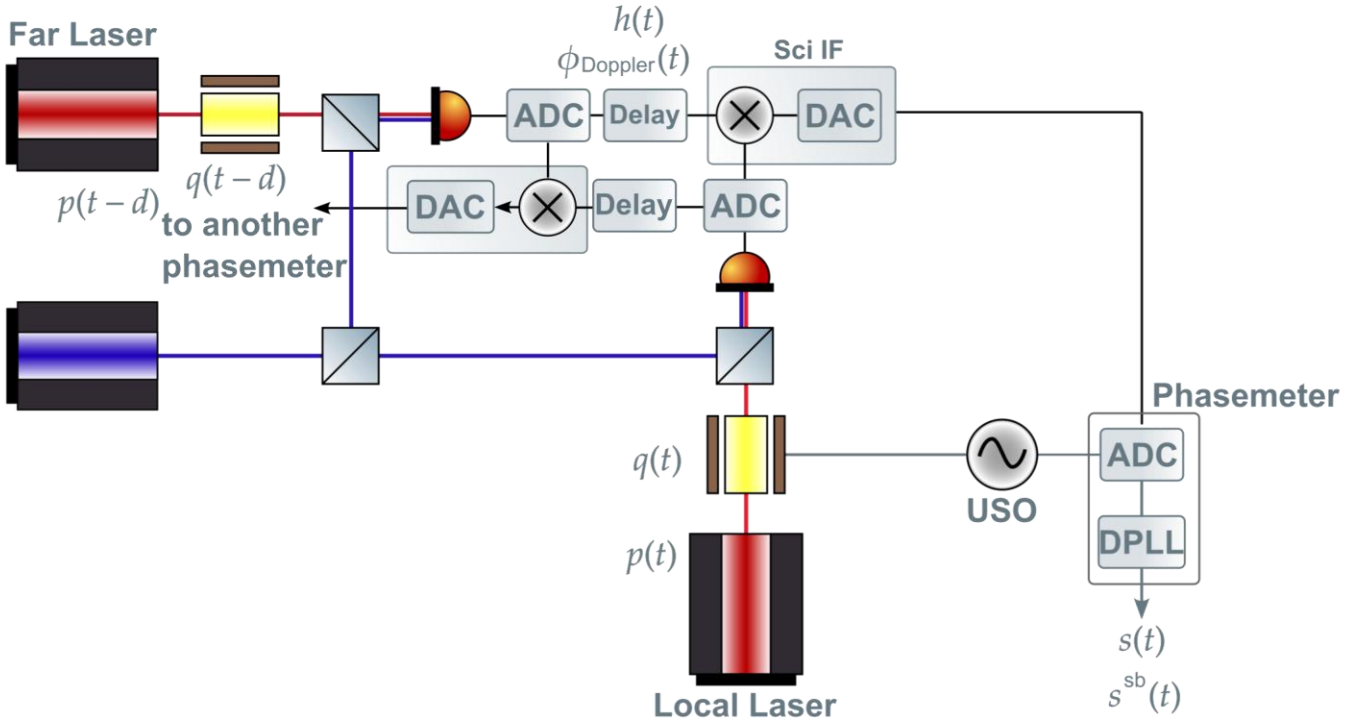
Far Laser
$h(t)$
$\phi_{\text{Doppler}}(t)$
Sci IF
ADC
Delay
DAC
$q(t-d)$
$p(t-d)$
to another phasemeter
DAC
Delay
ADC
Phasemeter
$q(t)$
ADC
USO
DPLL
$p(t)$
$s(t)$
$s^{\text{sb}}(t)$
Local Laser

The Delay Line

- The delay is added to a digital signal.
- It is interfaced with Python which is how the GW signal gets added
- The Doppler shift is added to the carrier signal and the sideband separately

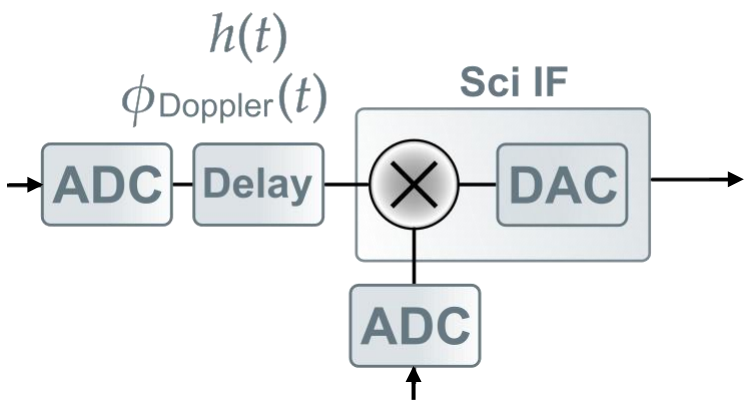

MiniLISA

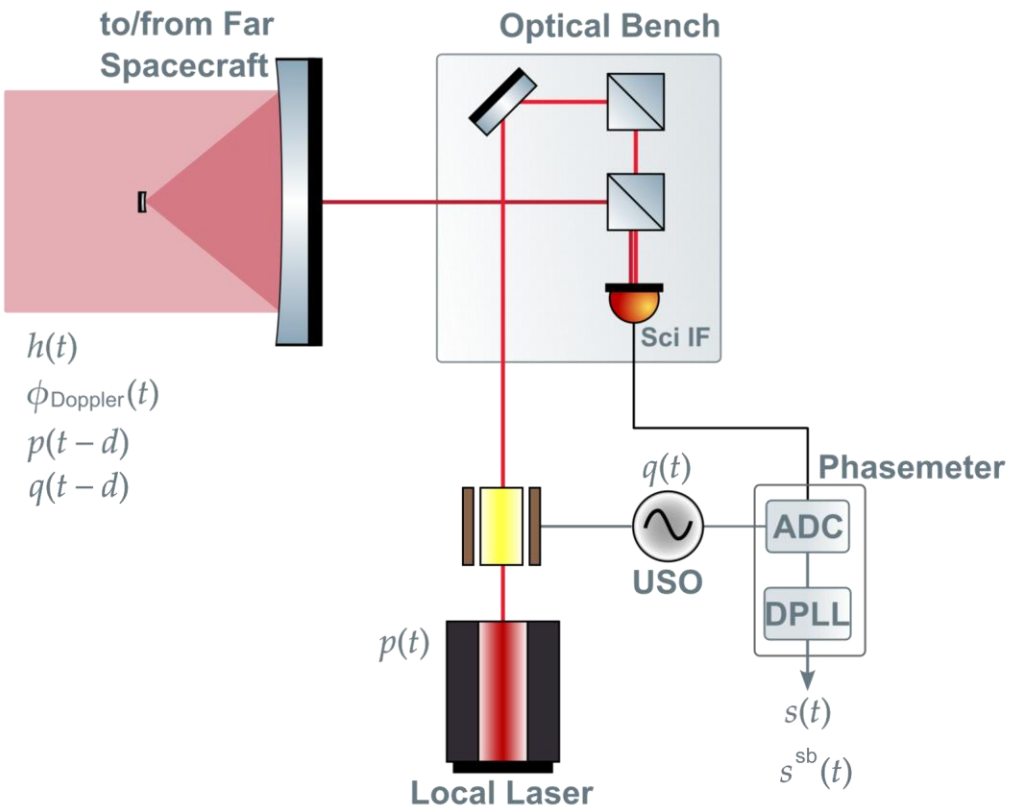
to/from Far Spacecraft
Optical Bench
$h(t)$
$\phi_{\text{Doppler}}(t)$
$p(t-d)$
$q(t-d)$
Sci IF
$q(t)$
Phasemeter
ADC
USO
DPLL
$p(t)$
$s(t)$
$s^{\text{sb}}(t)$
Local Laser

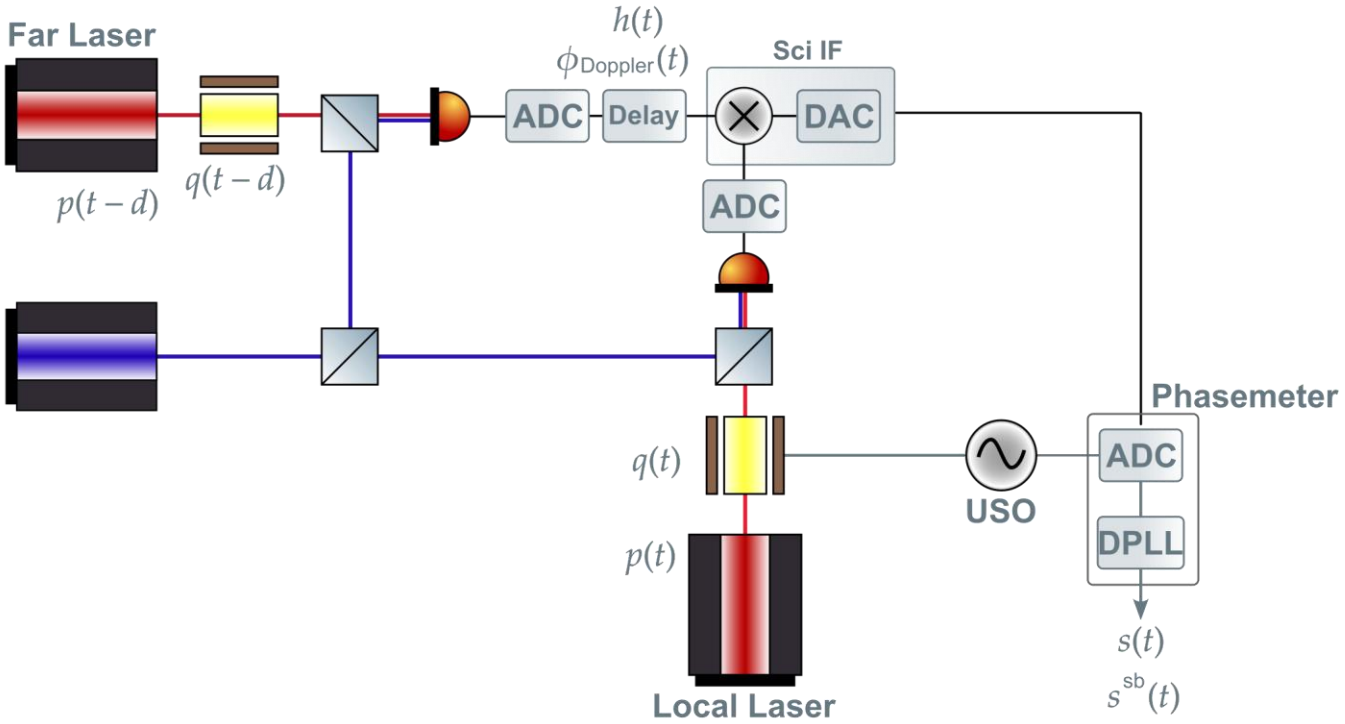
Far Laser
$h(t)$
$\phi_{\text{Doppler}}(t)$
Sci IF
ADC
Delay
DAC
$p(t-d)$
$q(t-d)$
ADC
Phasemeter
$q(t)$
ADC
USO
DPLL
$p(t)$
$s(t)$
$s^{\text{sb}}(t)$
Local Laser

MiniLISA

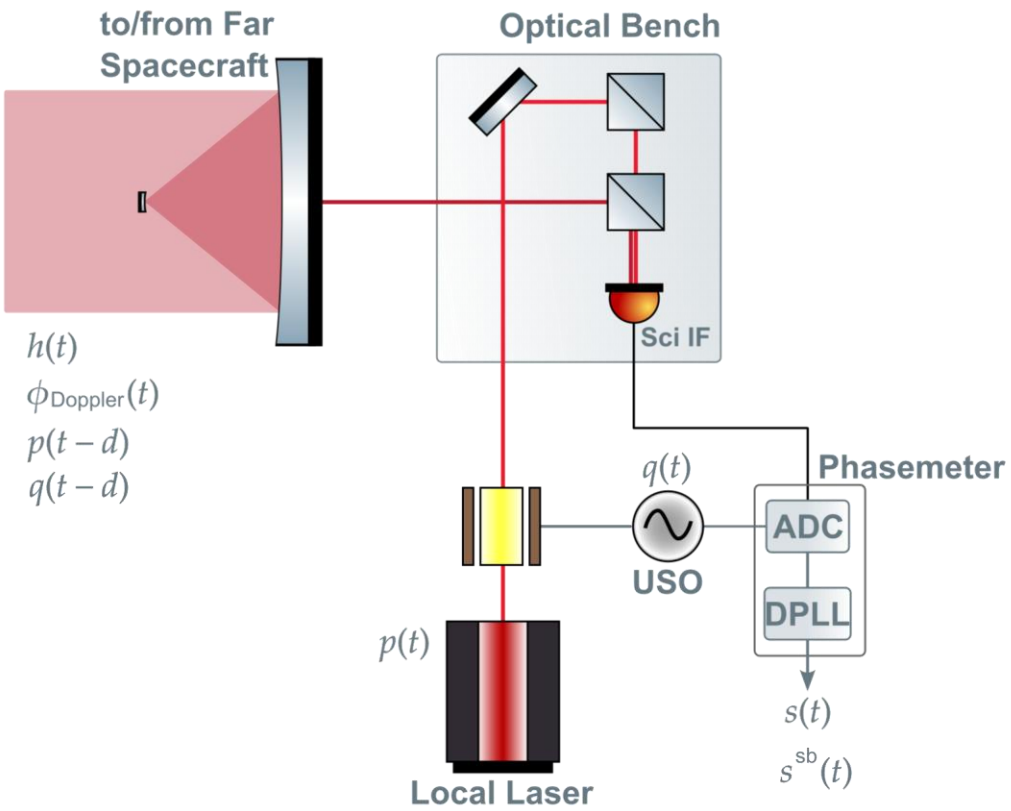

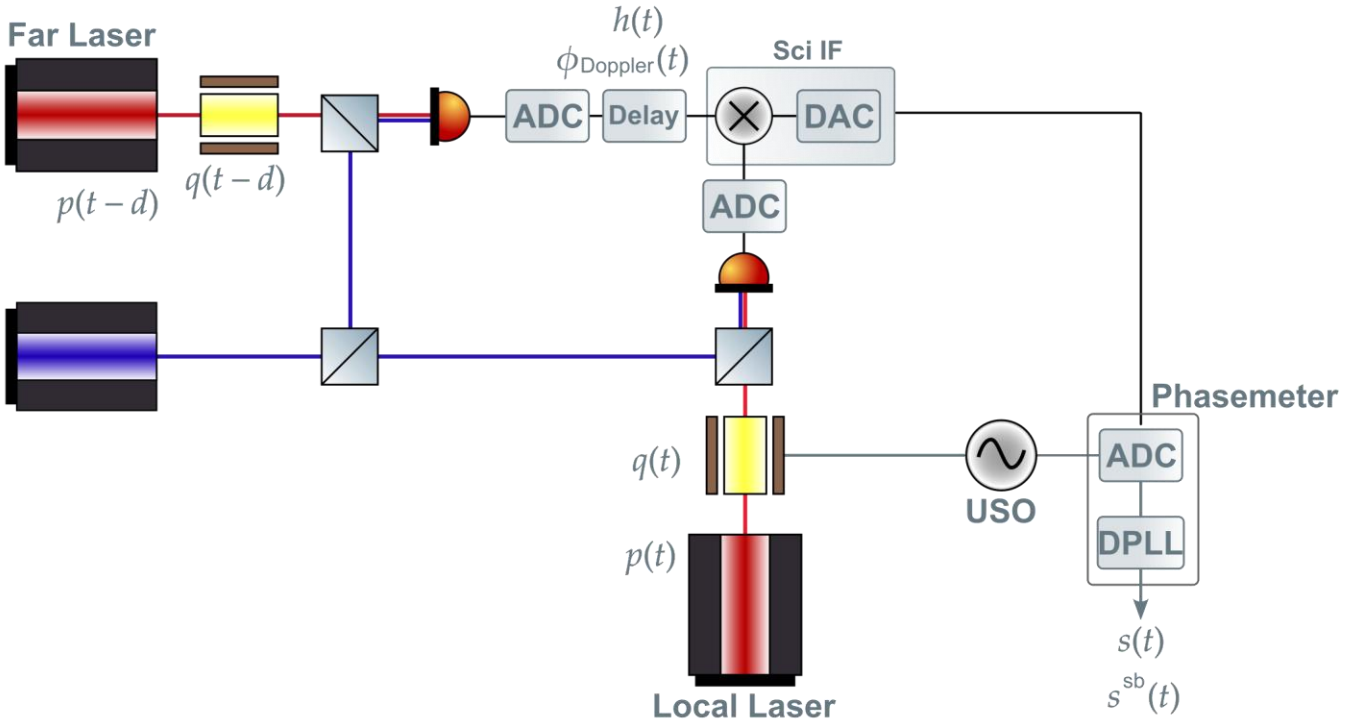

Thank you for listening!