TDI Testbed

Karin Kruuse

14.02.2025

THE SPECTRUM OF GRAVITATIONAL WAVES

esa

Observatories & experiments

Ground-based experiment

Space-based observatory

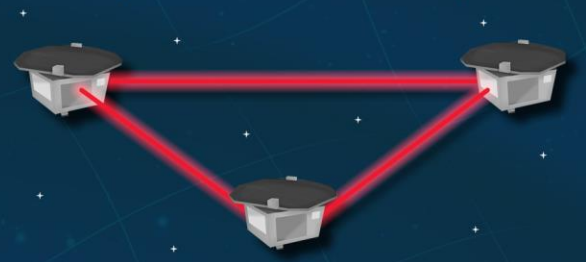

Pulsar timing array

Cosmic microwave background polarisation

Timescales

milliseconds | seconds | hours | years | billions of years

Frequency (Hz)

100 | 1 | 10^{-2} | 10^{-4} | 10^{-6} | 10^{-8} | 10^{-16}

Cosmic fluctuations in the early Universe

Cosmic sources

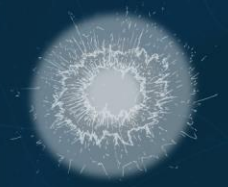

Supernova

Pulsar

Compact object falling onto a supermassive black hole

Merging supermassive black holes

Merging neutron stars in other galaxies

Merging stellar-mass black holes in other galaxies

Merging white dwarfs in our Galaxy

#lisa

LISA

- Space-based gravitational wave detector
- Three satellites surrounding six test masses in free fall
- No seismic noise and longer arm length are good for signal sensitivity.
- The arm-lengths are time-varying
  - which means laser noise won't cancel out
  - and the laser fields experience Doppler shifts in the range from -10 to 10 MHz

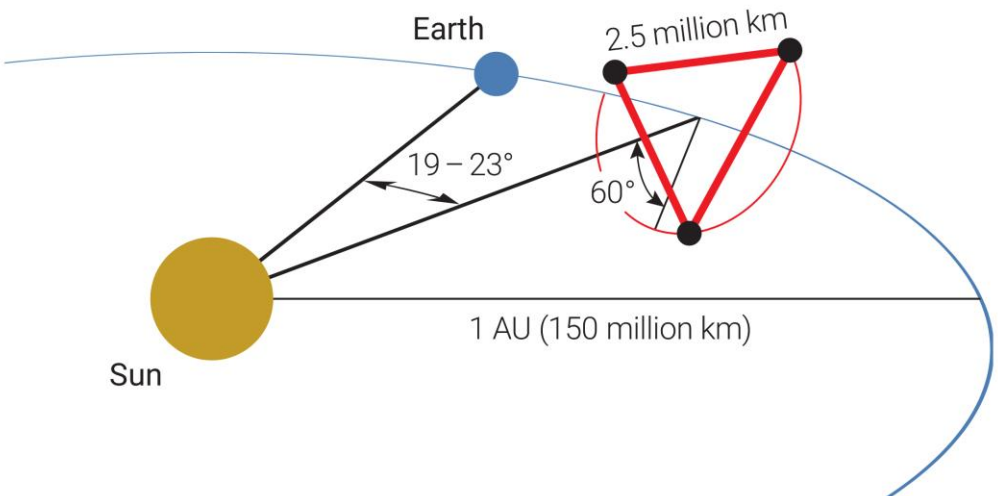

Amaro-Seoane et al., 2017

The Constellation

- Each satellite houses two lasers, two optical benches and a phasemeter.
- Each optical bench houses three interferometers.
- The test mass to test mass distances are measured in three parts – this is the so-called split interferometry used in LISA.

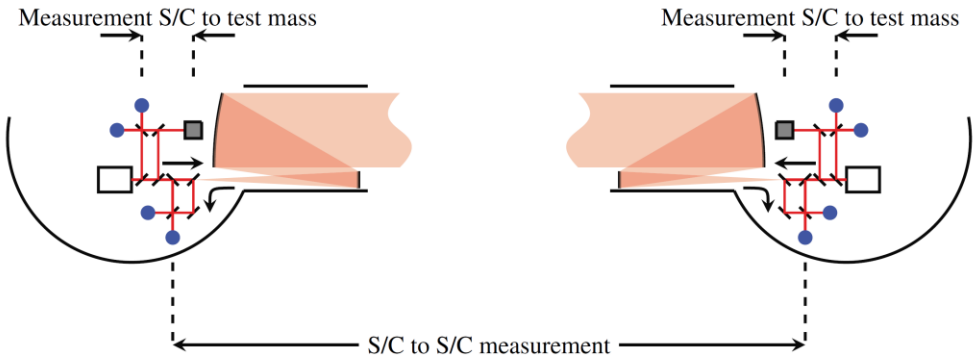

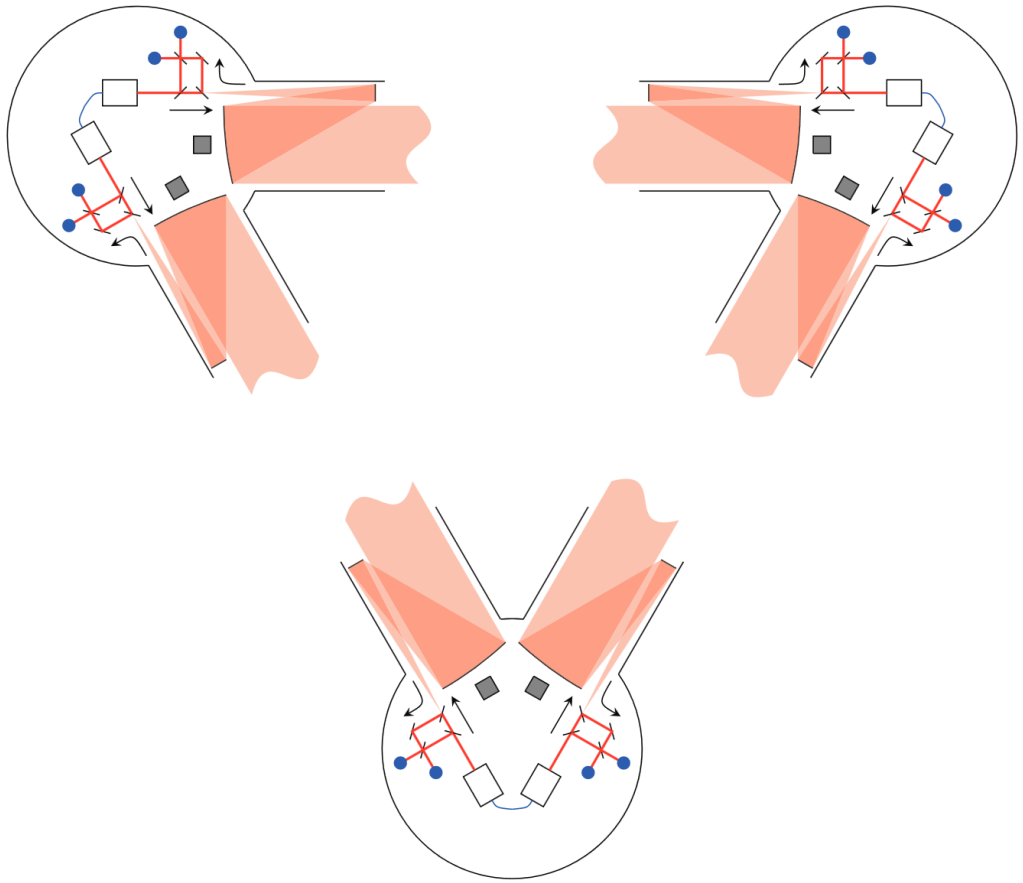

Jennrich, 2010

Internals of a LISA Spacecraft

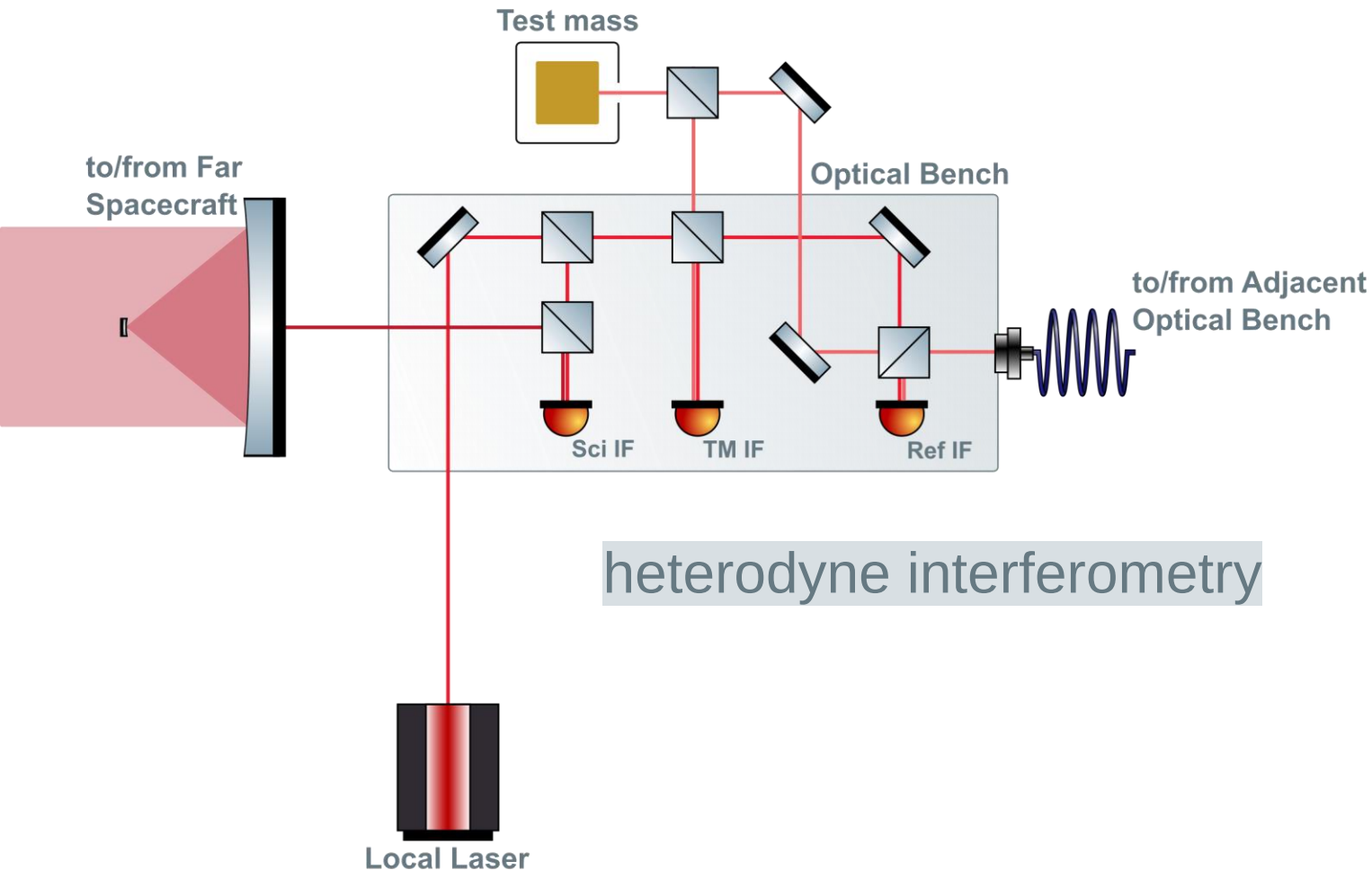

heterodyne interferometry

Internals of a LISA Spacecraft

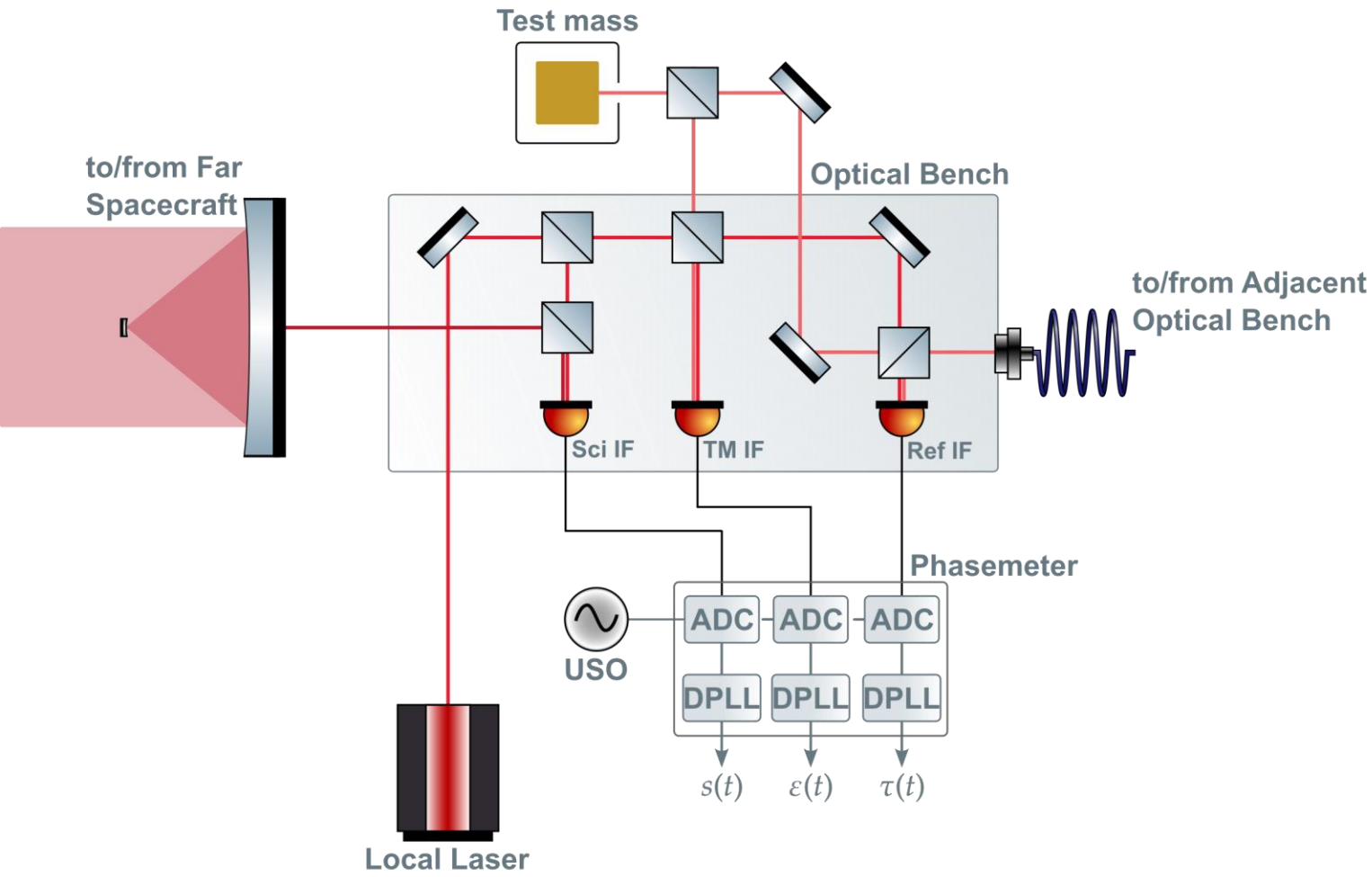

USO – Ultra Stable Oscillator

Internals of a LISA Spacecraft

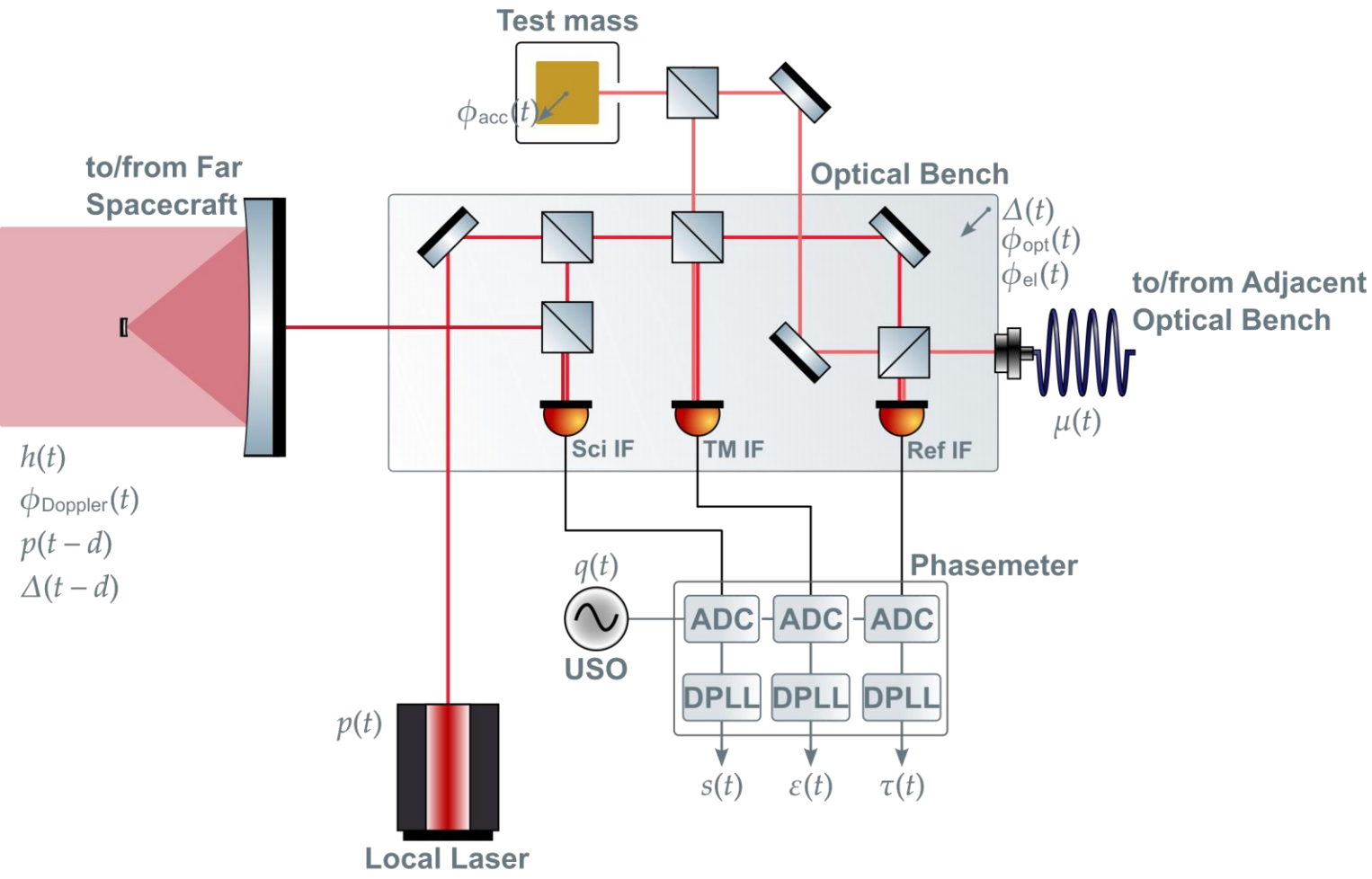

Internals of a LISA Spacecraft

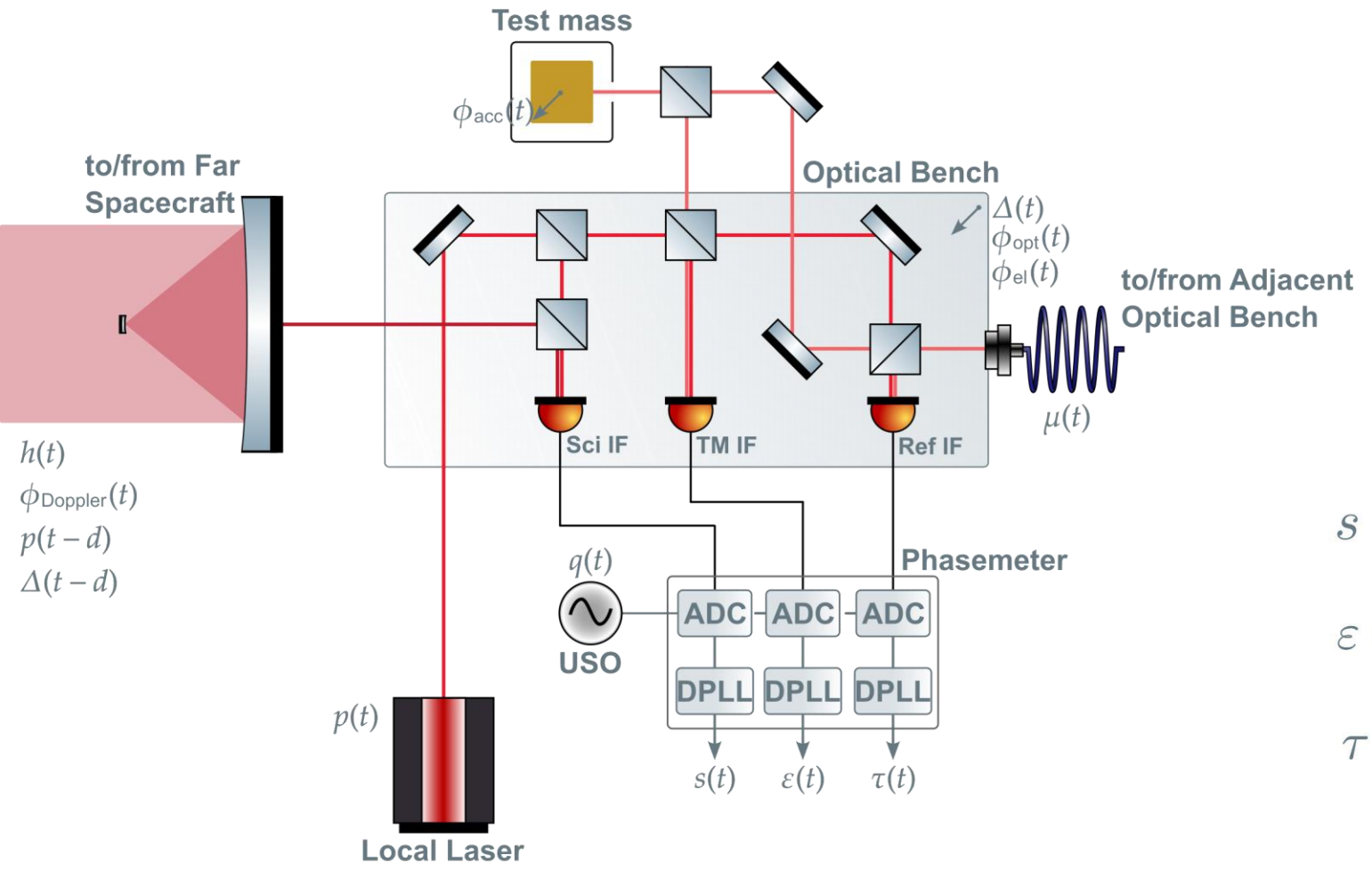

$$s = s(p_2, p_1, h, q_1, \mathbf{\Delta}_2, \mathbf{\Delta}_1, \phi_{\rm opt}, \phi_{\rm el})$$

$$\varepsilon = \varepsilon(p_1', p_1, q_1, \phi_{\rm acc1}, \mathbf{\Delta}_1, \phi^{\varepsilon}_{\rm opt}, \phi^{\varepsilon}_{\rm el}, \mu_1')$$

$$\tau = \tau(p_1', p_1, q_1, \phi^{\tau}_{\rm opt}, \phi^{\tau}_{\rm el}, \mu_1')$$

Problem: Laser Noise

- Phase must be measured at μrad precision
- This is orders of magnitude lower than the expected laser noise level in the beatnote measurements.

Solution: TDI

Construct virtual equal arms in post-processing.

The measurements are filtered and downsampled before they are sent to Earth and used in TDI.

Hartwig, 2021

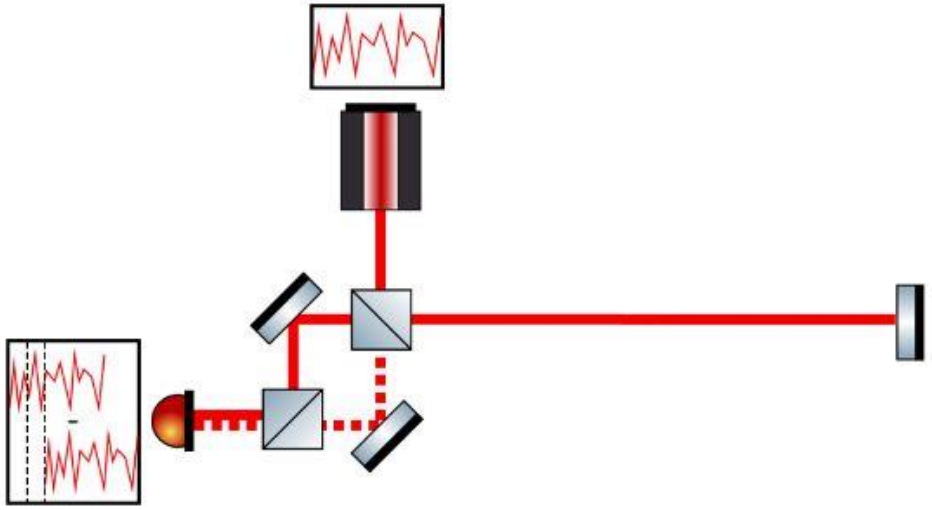

Transponder signal

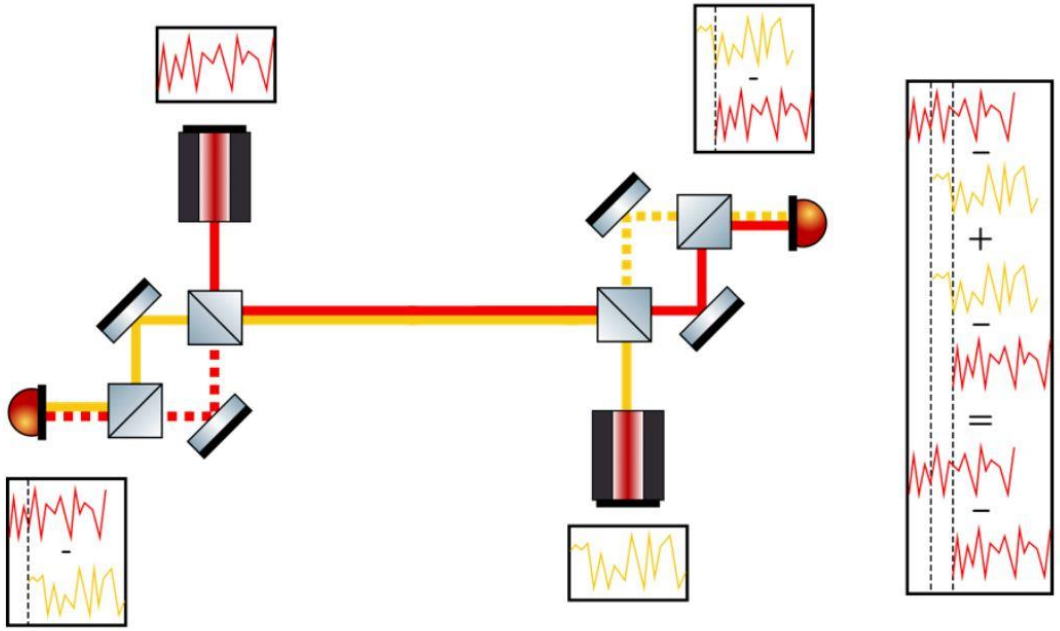

Virtual transponder signal

Solution: TDI

Hartwig, 2021

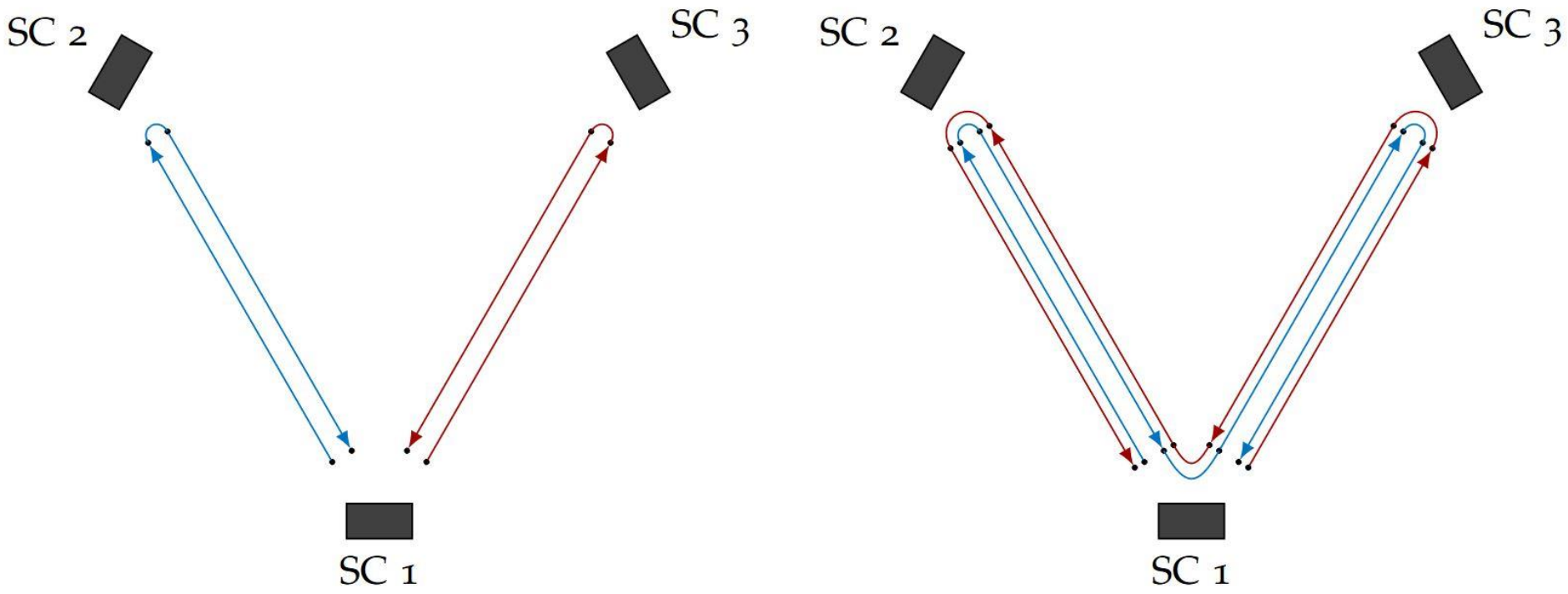

0th generation TDI X combination, equal unchanging arm lengths

In practice, 2nd generation combinations should suppress noise enough.

Problem: Clock Noise

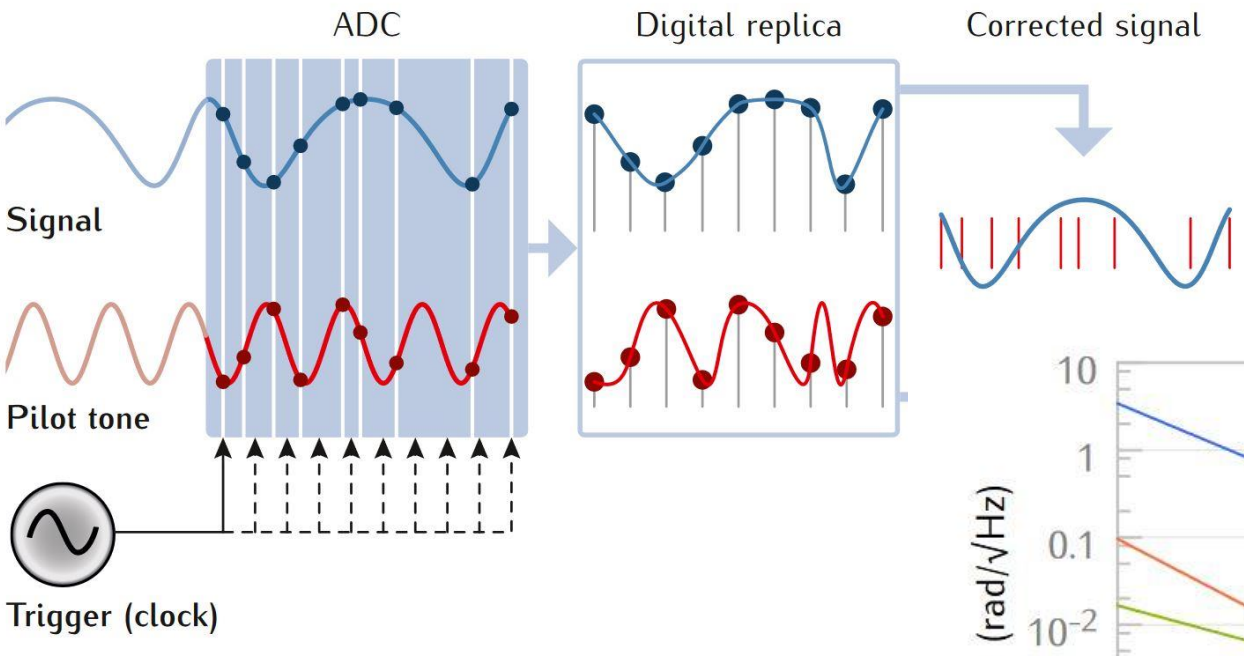

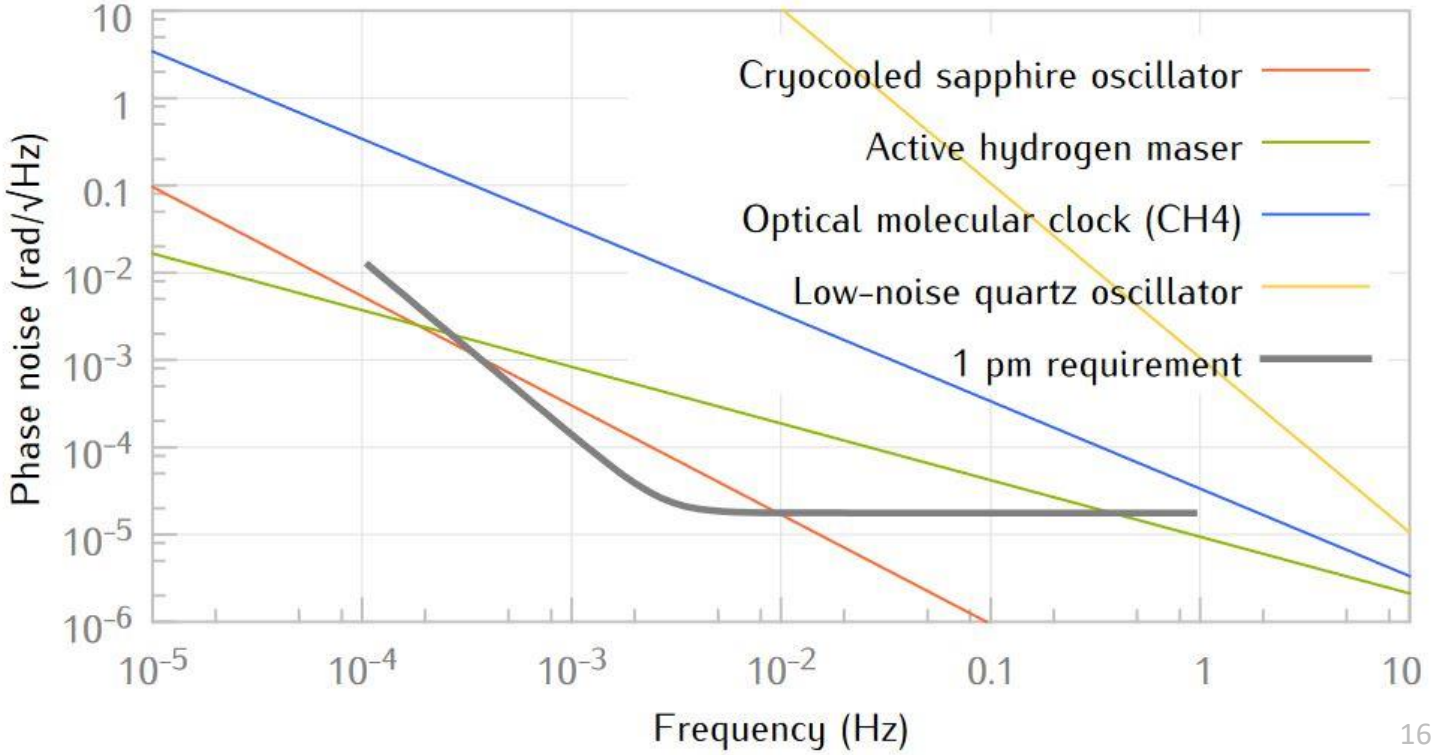

Lisa metrology system-final report, 2014

Solution: The sidebands

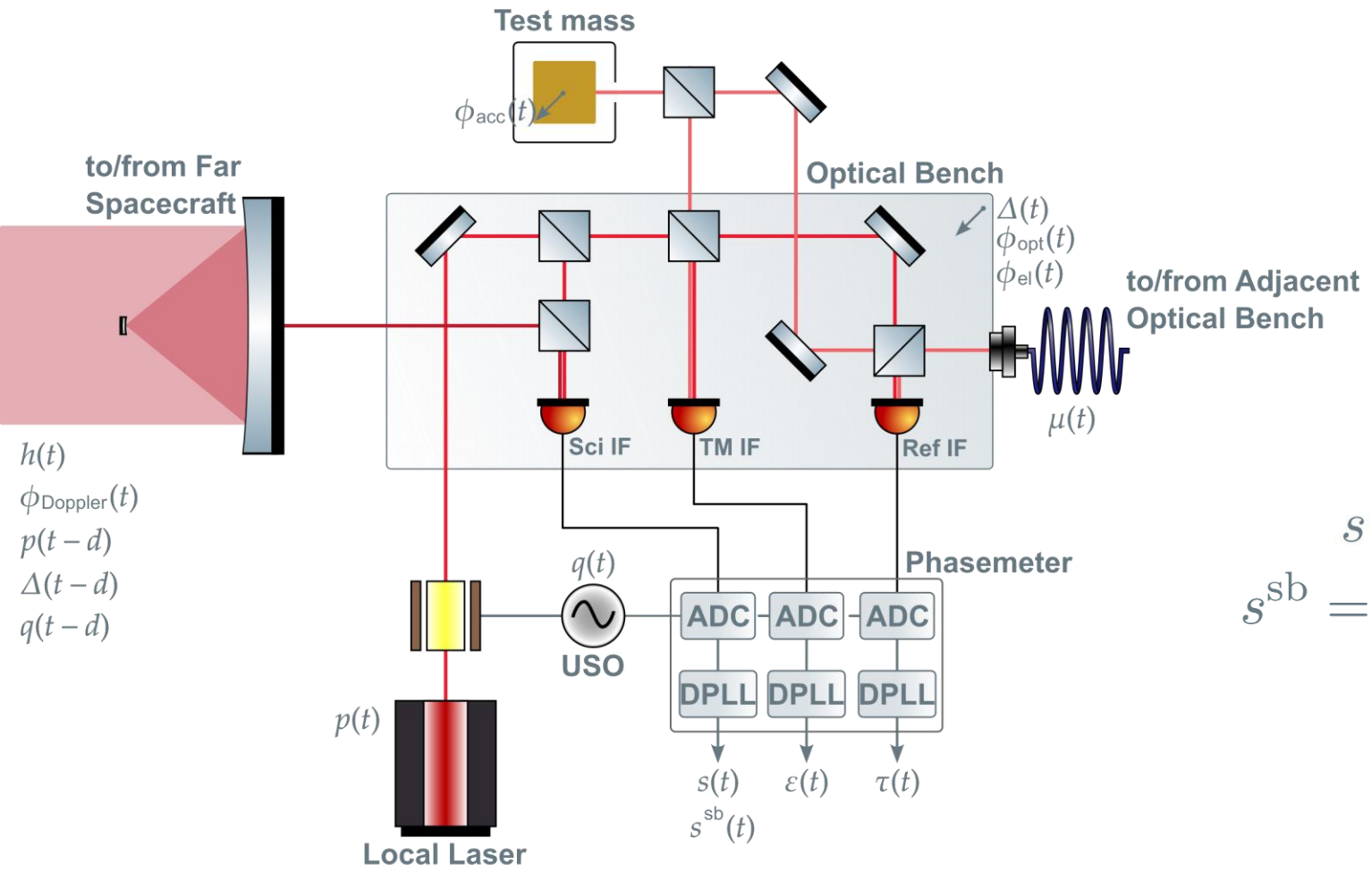

$$s = s(p_2, p_1, h, q_1, \boldsymbol{\Delta}_2, \boldsymbol{\Delta}_1, \phi_{\mathrm{opt}}, \phi_{\mathrm{el}})$$

$$s^{\mathrm{sb}} = s^{\mathrm{sb}}(p_2, p_1, h, q_1, q_2, \boldsymbol{\Delta}_2, \boldsymbol{\Delta}_1, \phi_{\mathrm{opt}}^{\mathrm{sb}}, \phi_{\mathrm{el}}^{\mathrm{sb}})$$

Solution: The sidebands

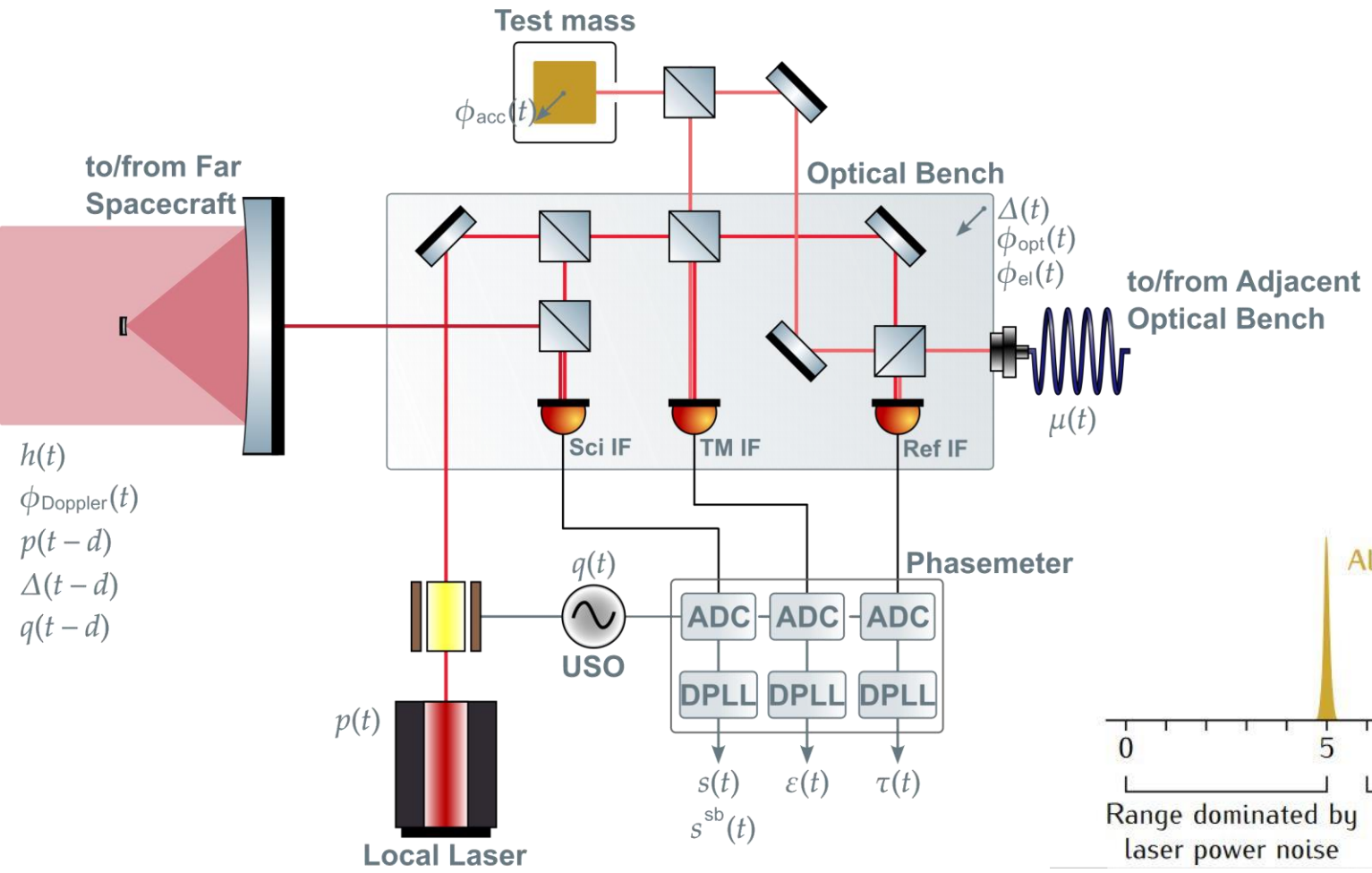

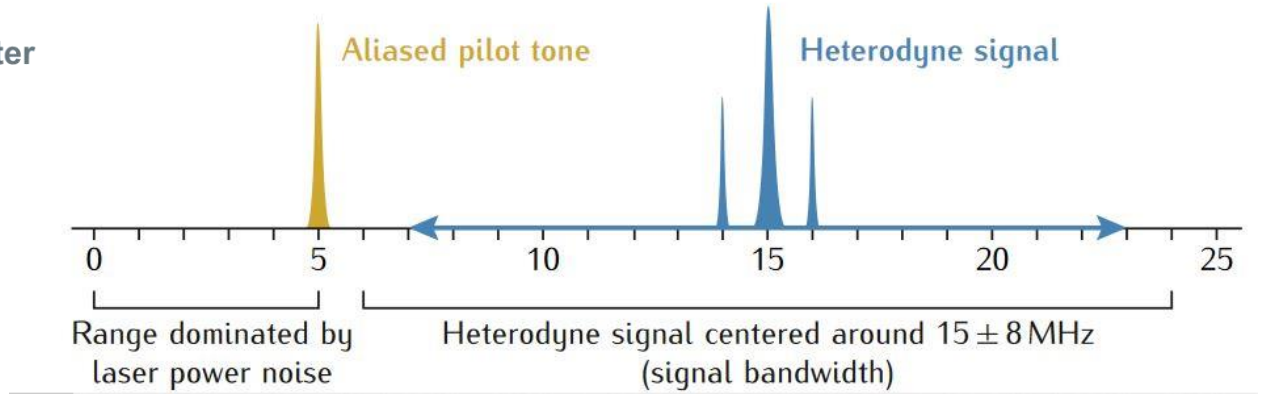

Lisa metrology system-final report, 2014

Previous Experiments

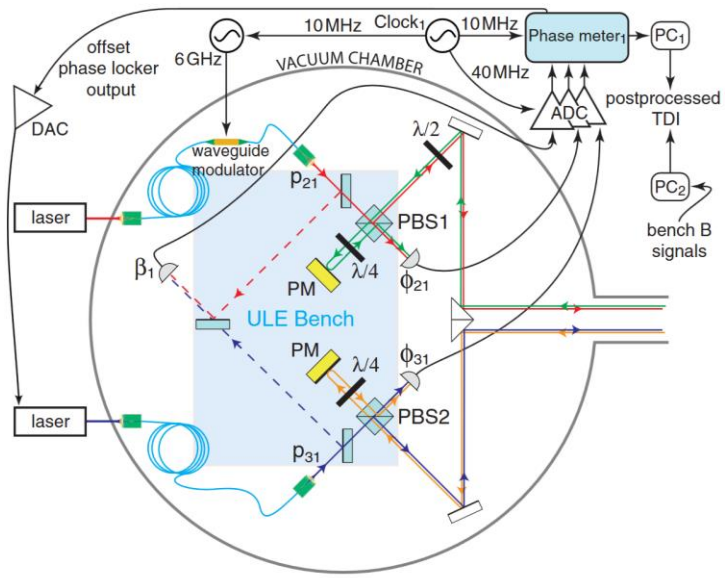

De Vine et al., 2010: Experimental Demonstration of Time-Delay Interferometry for LISA, JPL

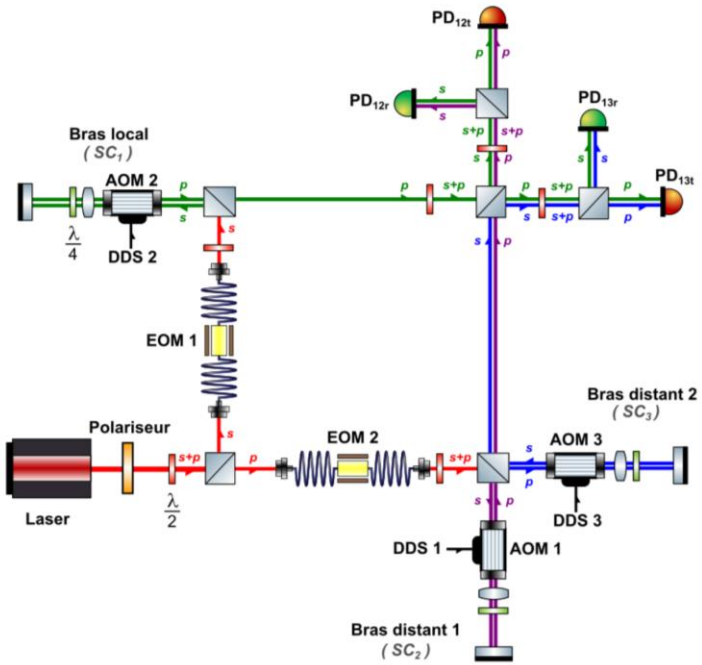

Vidal, 2023: Validation expérimentale des performances interférométriques de LISA, Paris

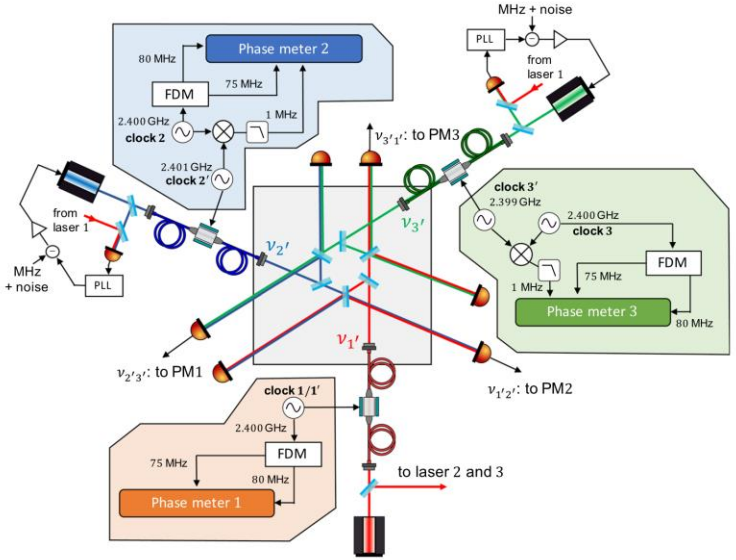

Yamamoto et al., 2022: Experimental Verification of Intersatellite Clock Synchronization at LISA Levels, Here

The UFLIS

The University of Florida Laser Interferometry Simulator

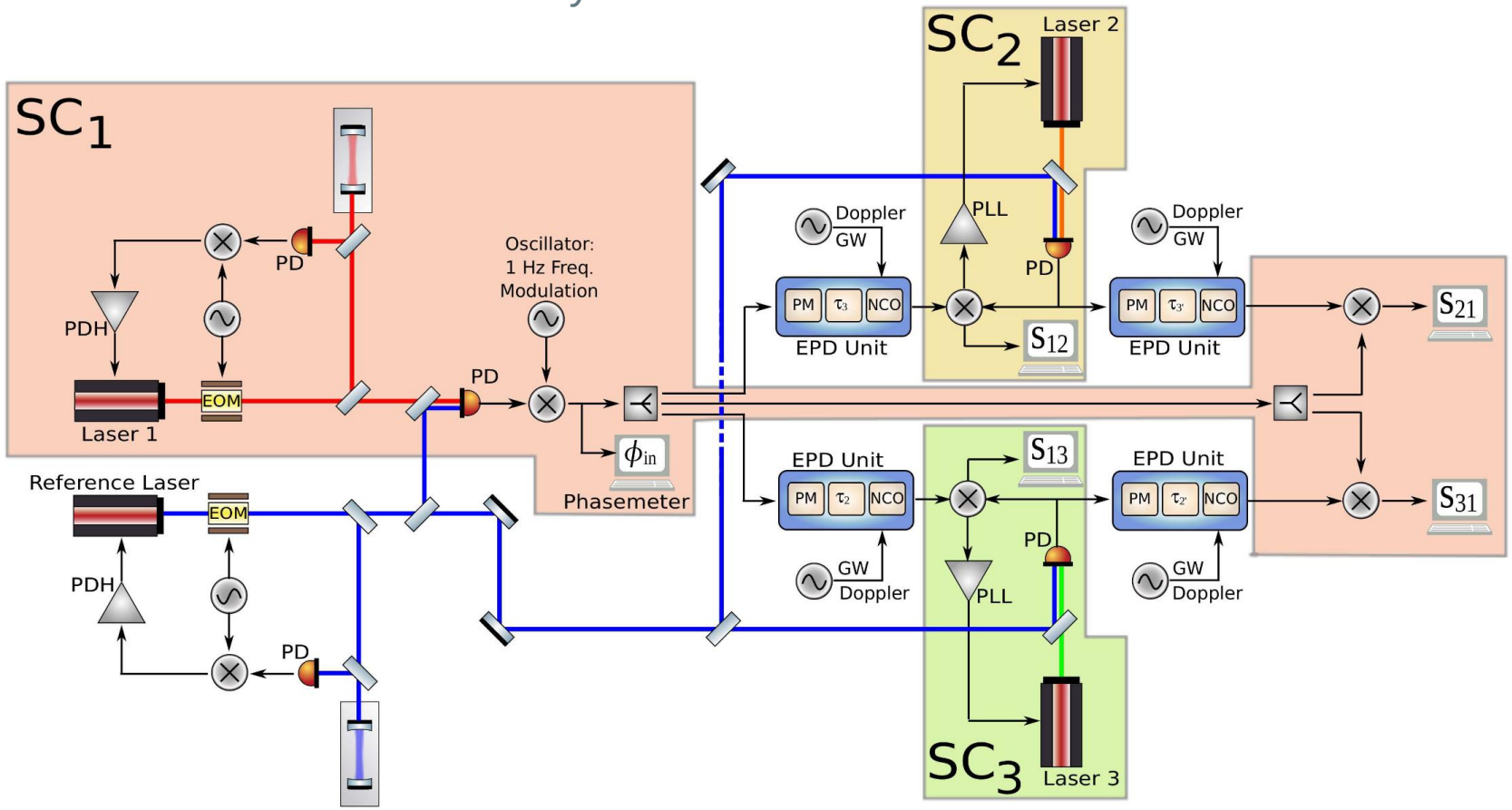

Mitryk, 2012

Conclusions on previous stuff, what was done.

MiniLISA

- … aims to test TDI
- with clock sidebands
- and an actual, realistic delay in the beatnote

- 📌 **INSERT SLIDE before Slide 24**: “System Overview: What MiniLISA simulates”
  Diagram: Lasers → delays → phasemeters → post-processing
  Say: “We are not trying to reproduce LISA sensitivity — our goal is to simulate the LISA signal flow chain under realistic timing errors and delay inaccuracies.”

MiniLISA – one beatnote

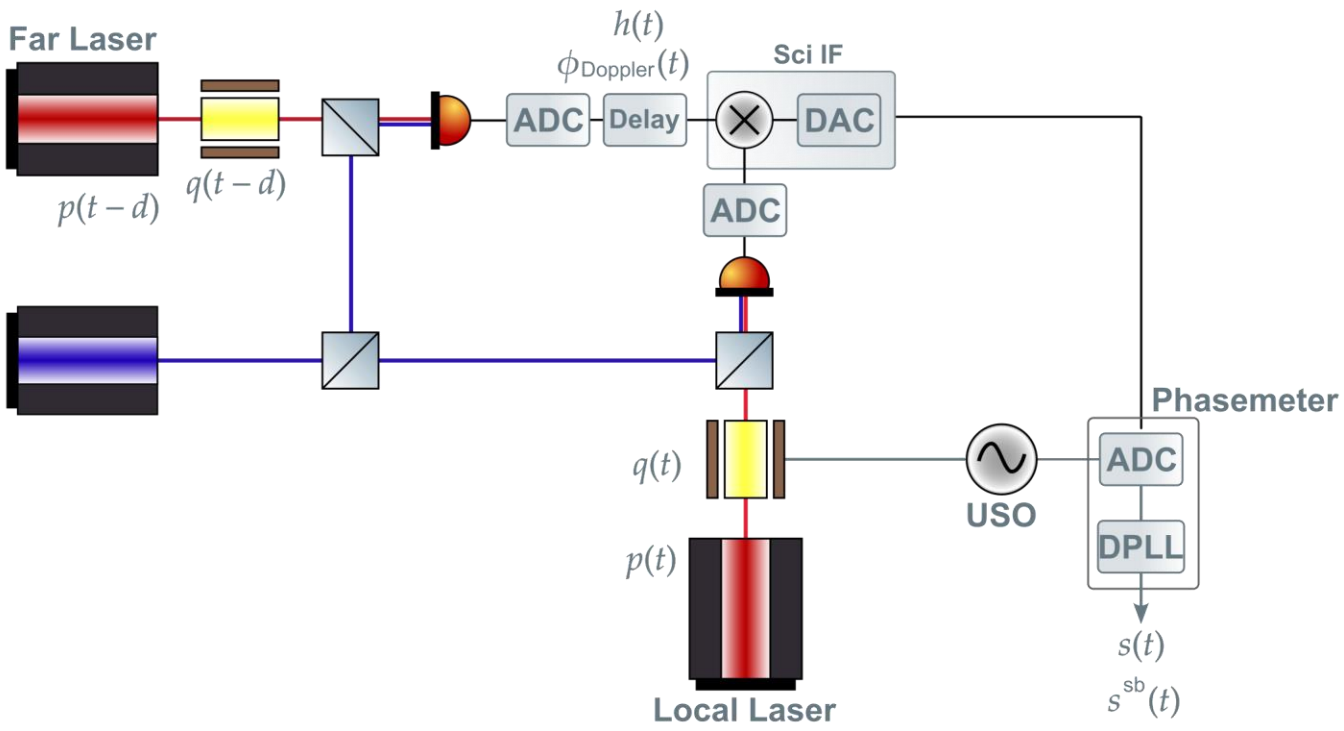

MiniLISA – one arm link

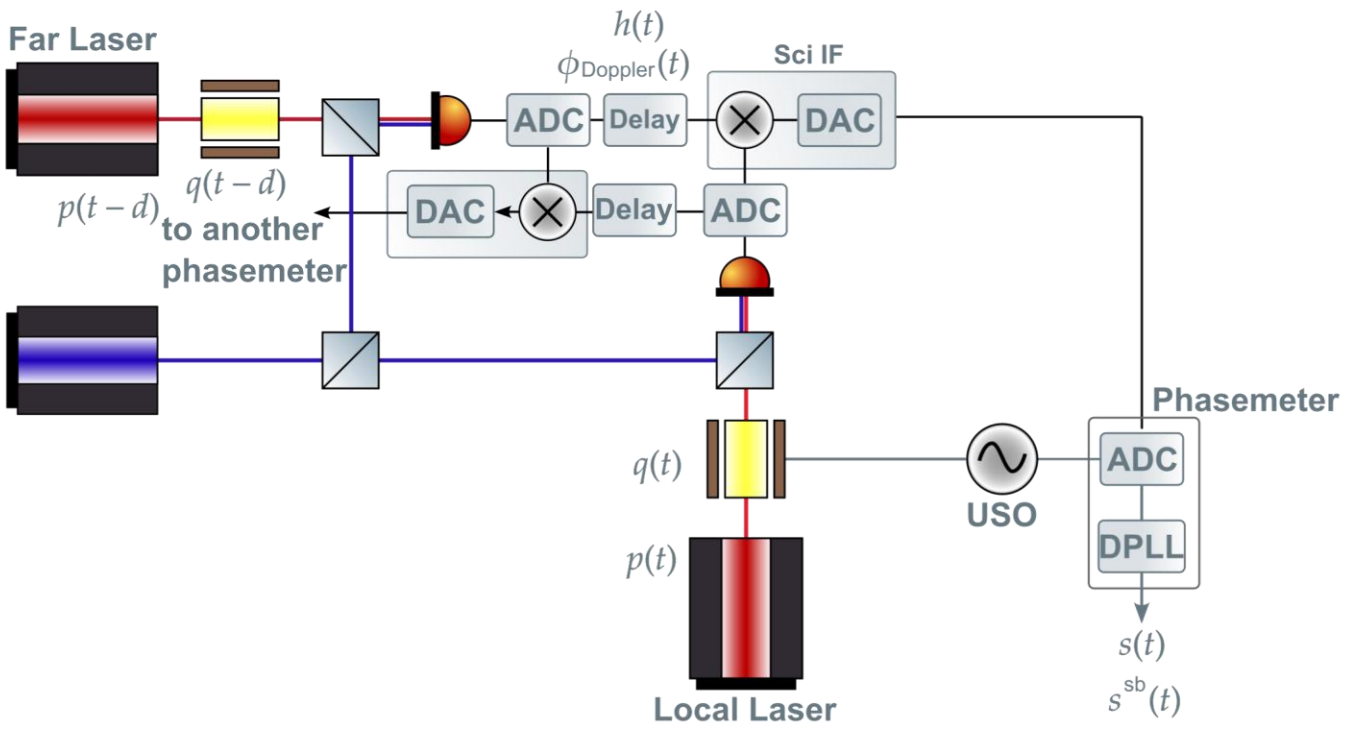

MiniLISA – one beatnote and how it compares to LISA

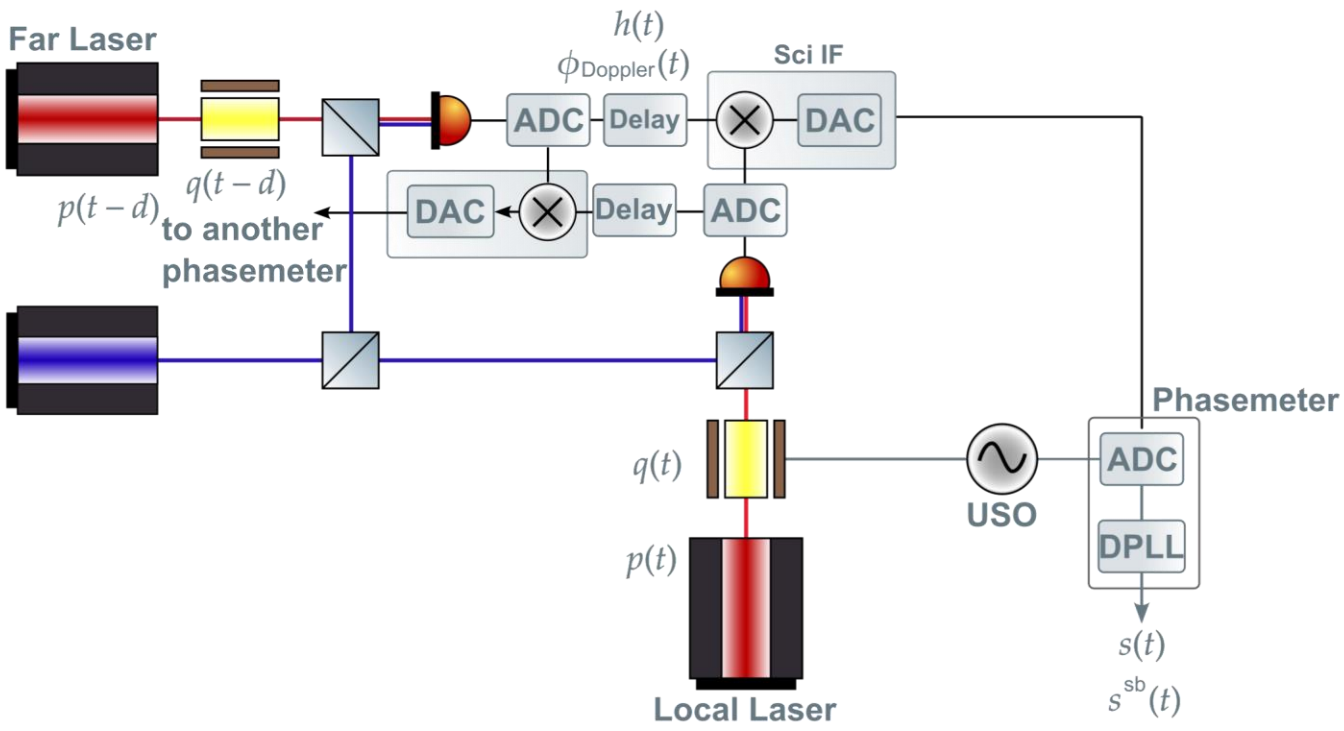

The Delay Line - implementation

- The delay is added to a digital signal.
- It is interfaced with Python which is how the GW signal gets added
- The Doppler shift is added to the carrier signal and the sideband separately

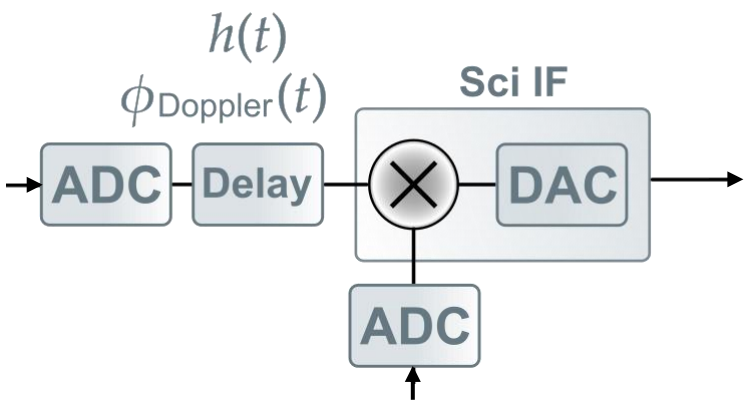

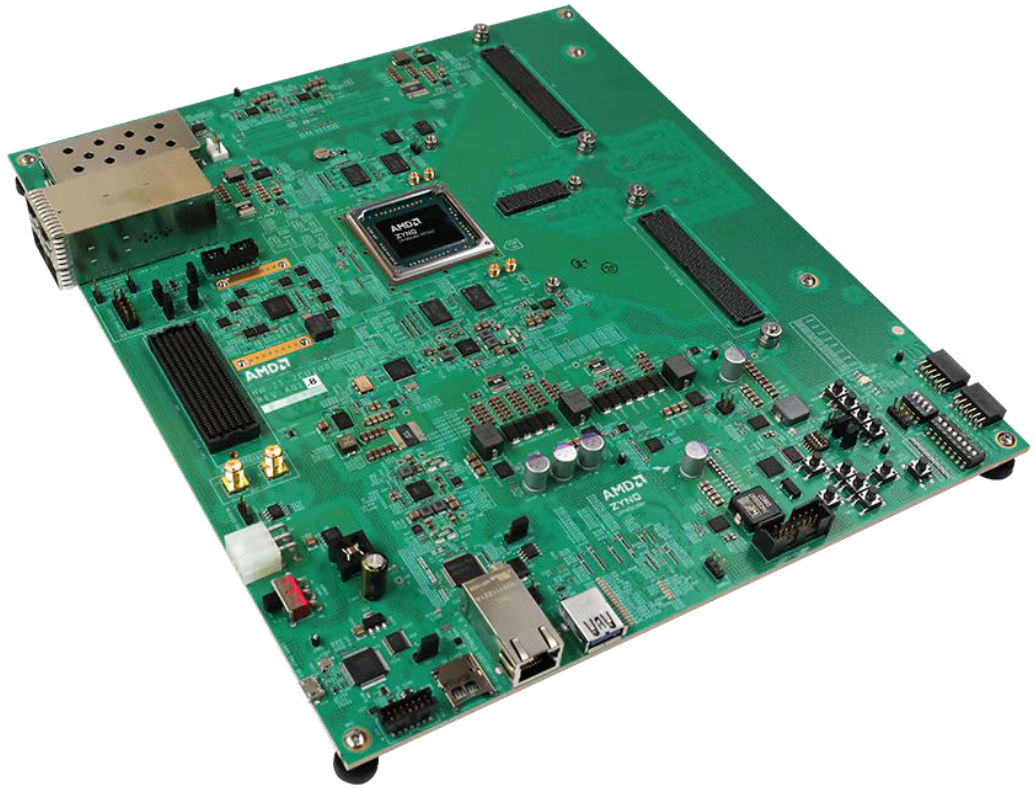

The Delay Line – critical aspects to be verified

- The delay is added to a digital signal.
- It is interfaced with Python which is how the GW signal gets added
- The Doppler shift is added to the carrier signal and the sideband separately

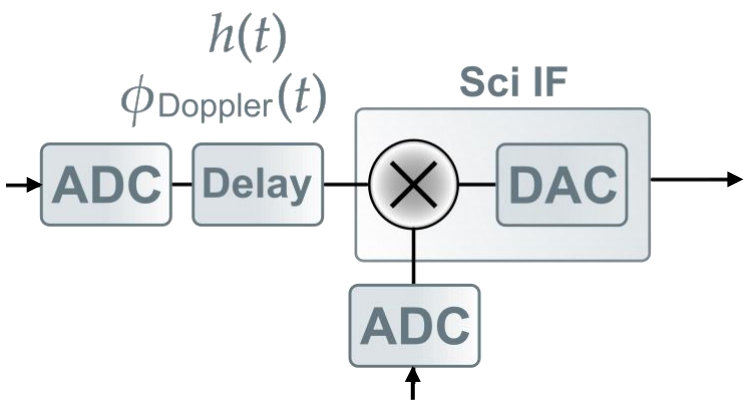

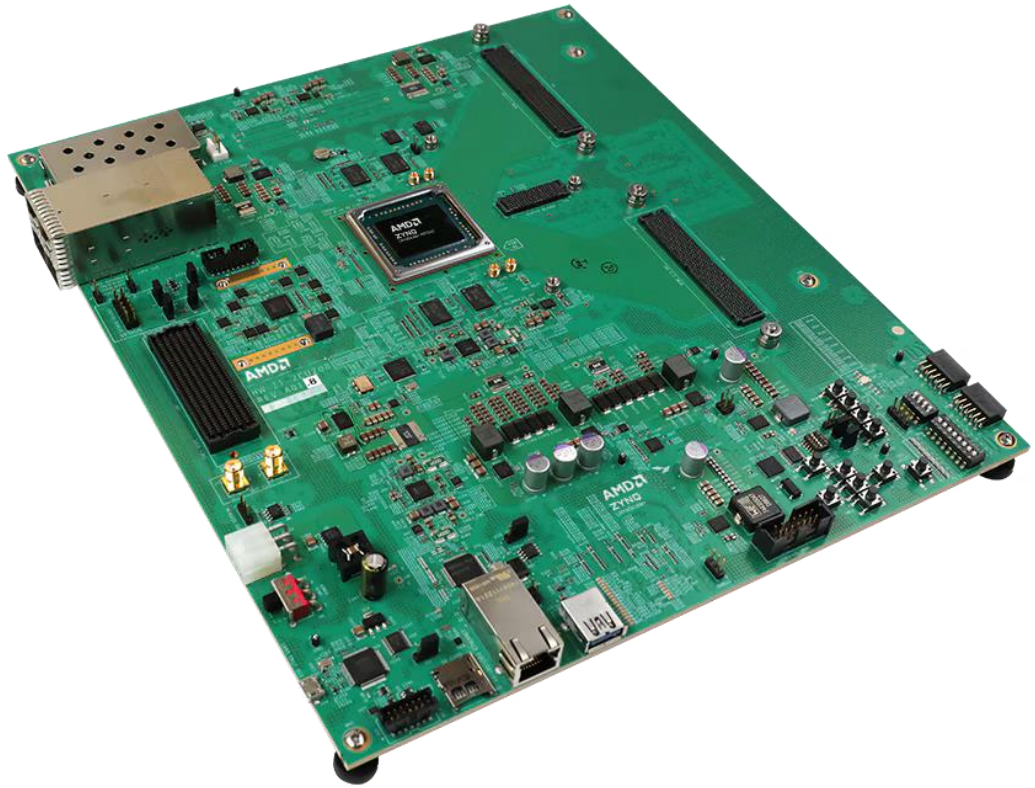

The phasemeter

- Red Pitaya
- LISA Gateware
- Noisier ADC
  - But that’s why we have the pilot tone

MiniLISA – full set up

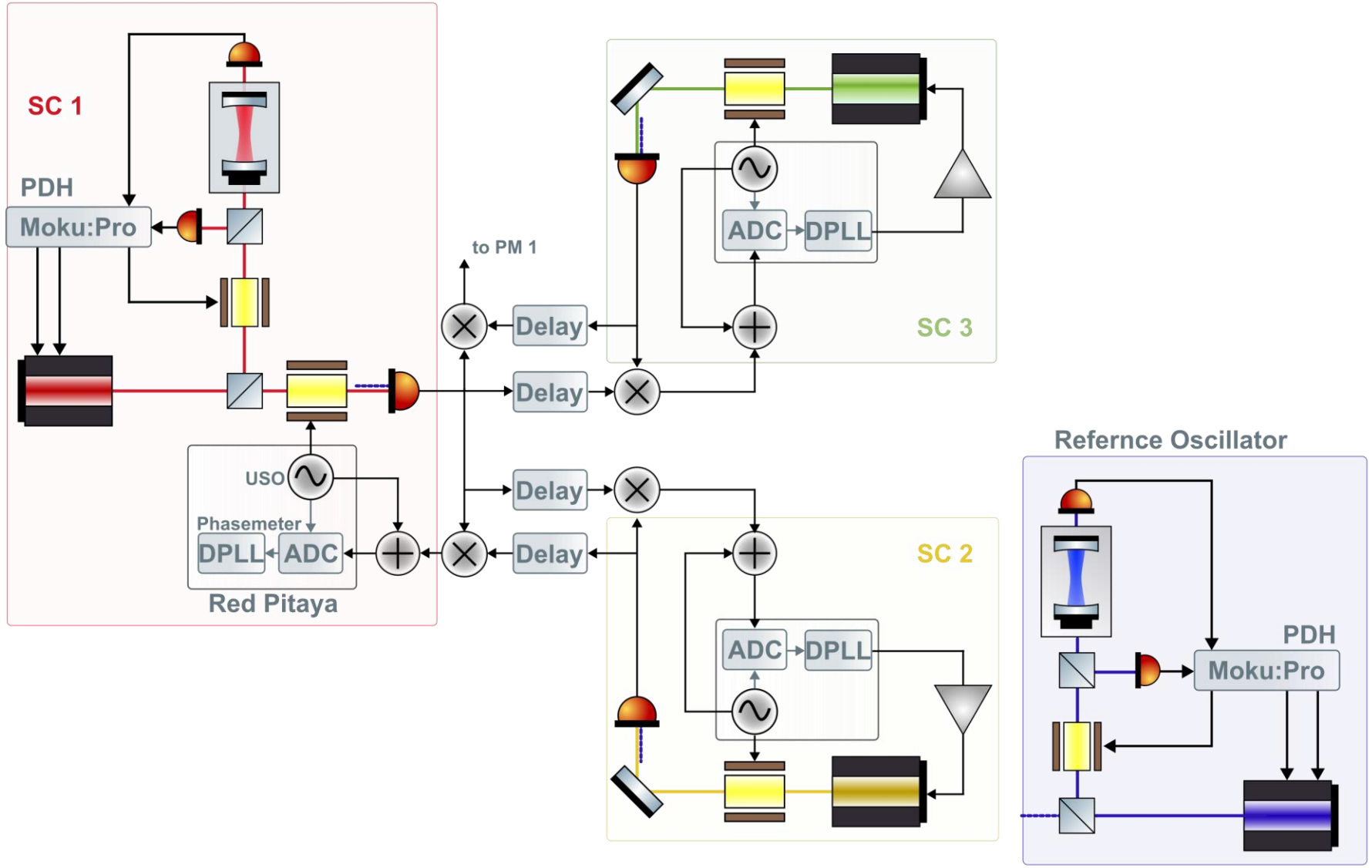

Frequency distribution/comparison to LISA

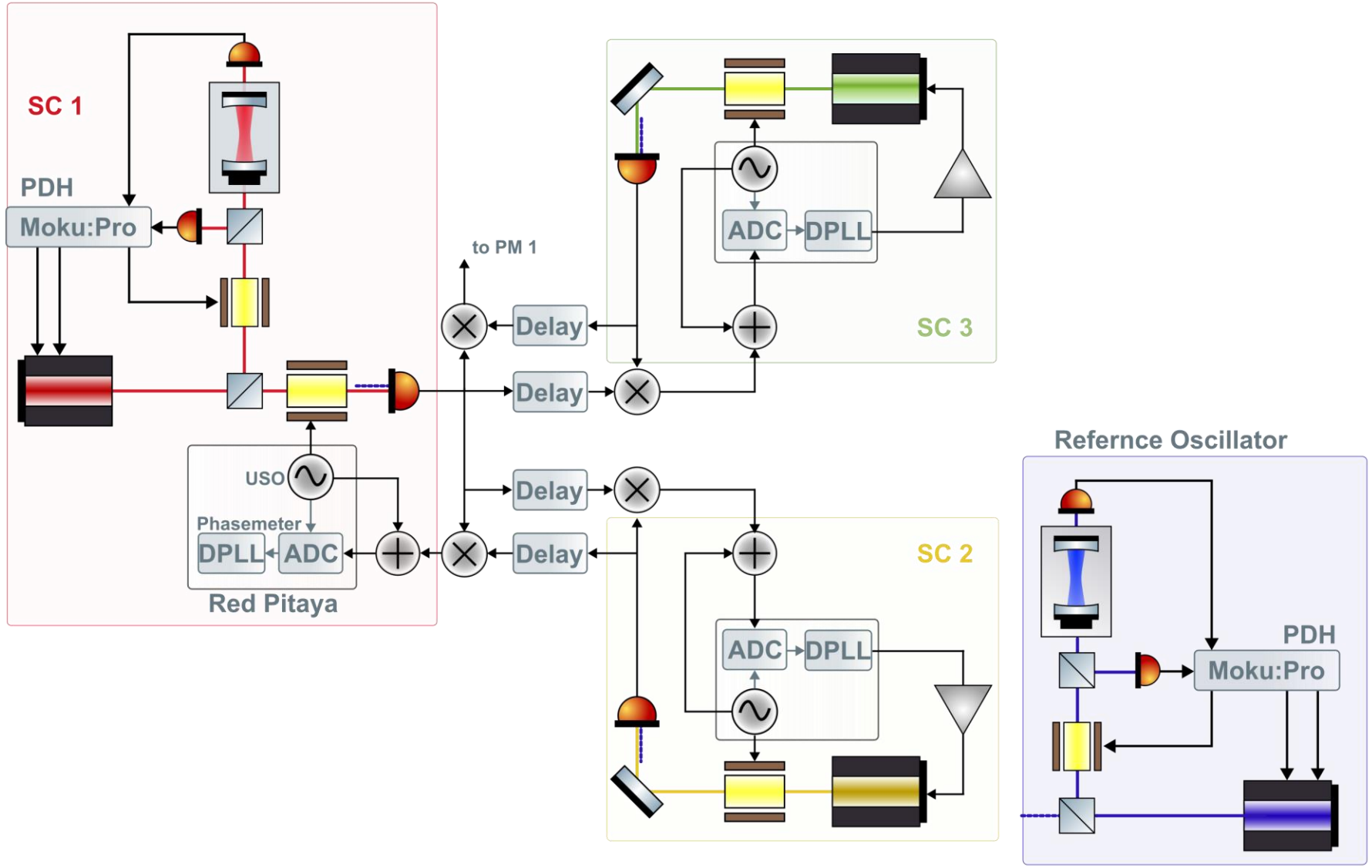
SC 1
PDH
Moku:Pro
USO
Phasemeter
DPLL
ADC
Red Pitaya
to PM 1
Delay
Delay
Delay
Delay
ADC
DPLL
SC 3
ADC
DPLL
SC 2
Refernce Oscillator
PDH
Moku:Pro

The beat notes

- Write them out
- Talk about what the 1 laser per SC means.

What measurements to verify TDI?

- Free running laser PSD

Why note all three arm links?

- Beatnotes will fall out of 6 to 24 MHz range.

Technical noises?

- Mostly applies to optics: lasers, cavities, EOMs, photodetectors
- EOM phase noise
- Thermal noise, cavity stability
- Photodetector noises
- Digital signals don’t really suffer from this, but still from the delay line the ADC and DAC noises, which are correlated!, need to be accounted for.

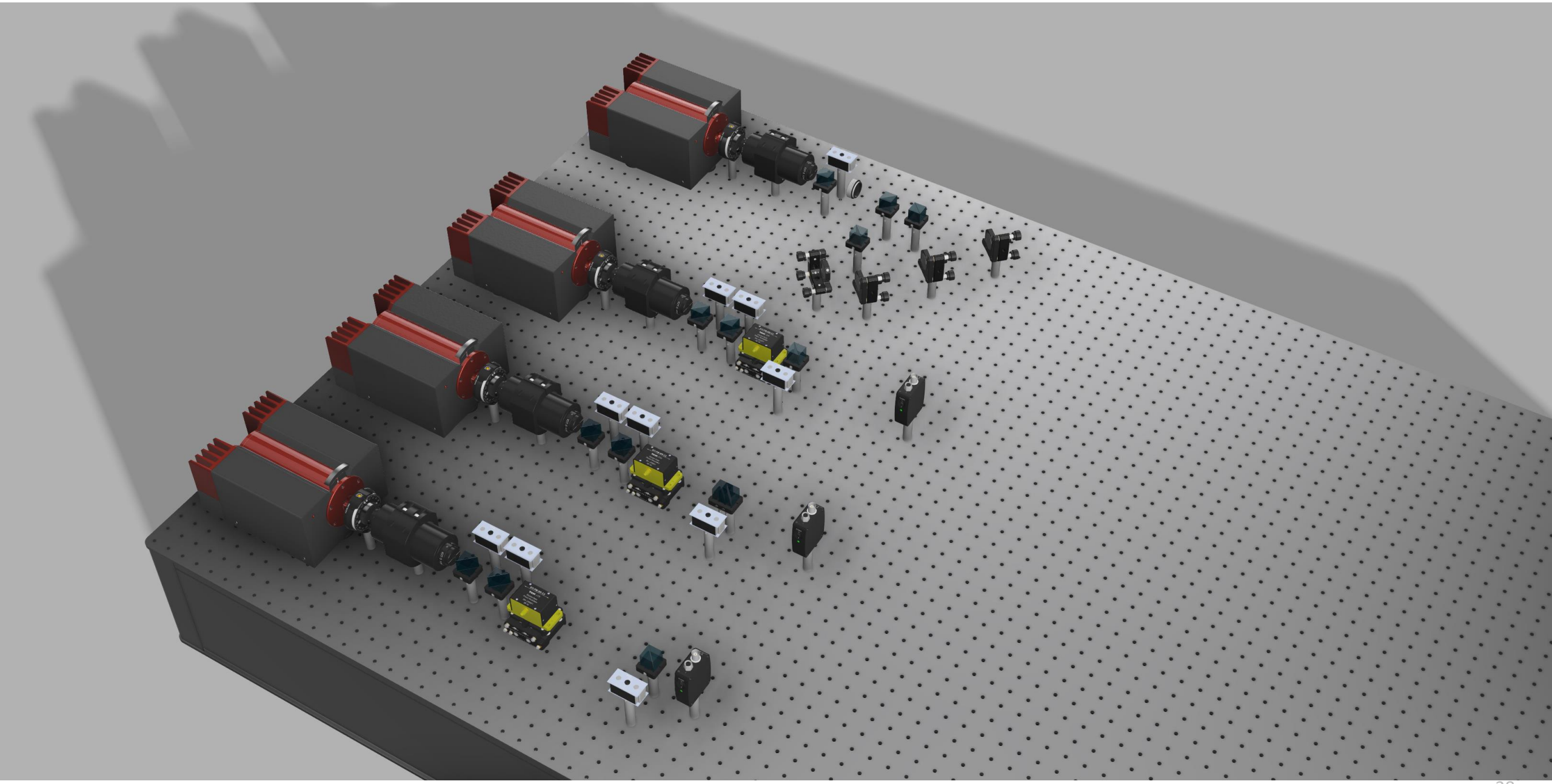

MiniLISA

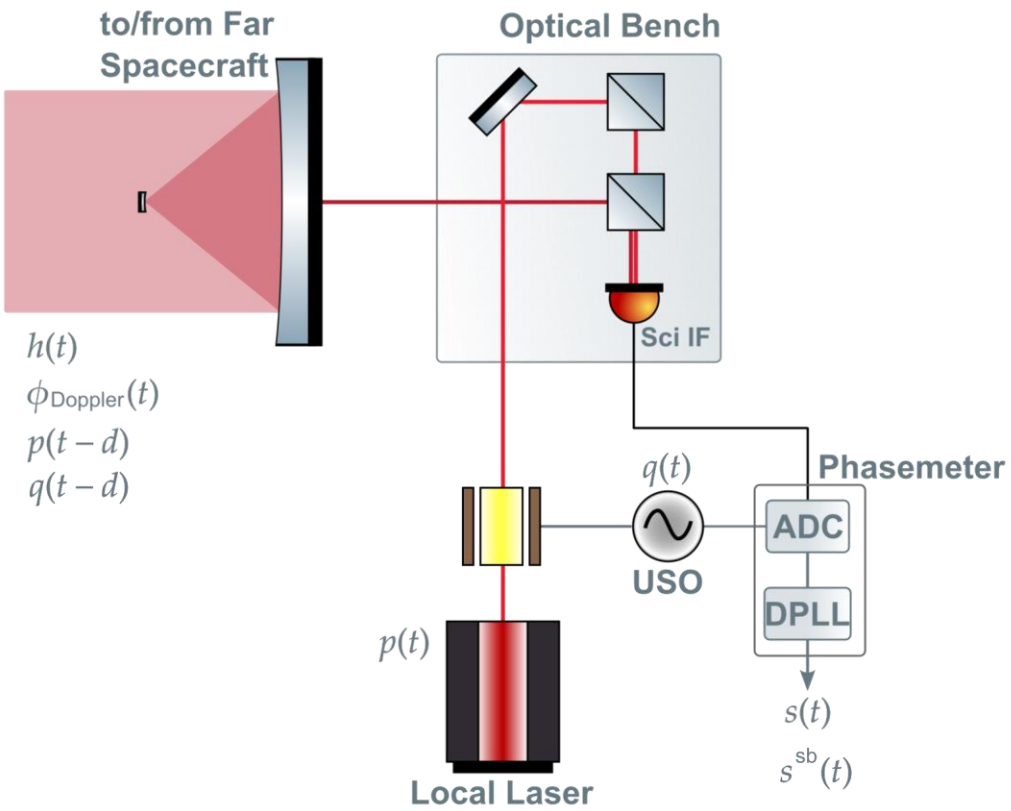

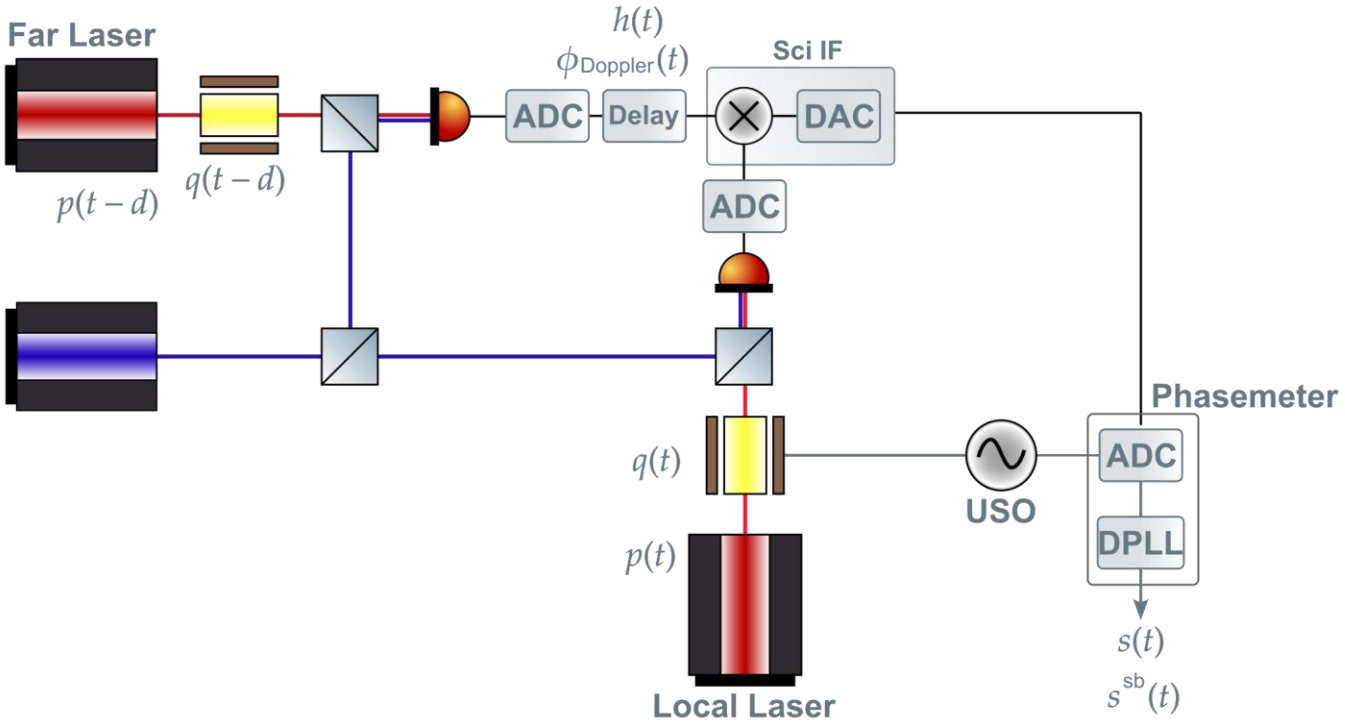

Thank you for listening!