Testbed for Validating Second-Generation TDI and Clock Noise Correction for LISA

Karin Kruuse

14.02.2025

Outline of the Talk

- LISA interferometry
- Briefly about previous LISA simulators
- Overview of our proposed LISA testbed

THE SPECTRUM OF GRAVITATIONAL WAVES

esa

Observatories & experiments

Ground-based experiment

Space-based observatory

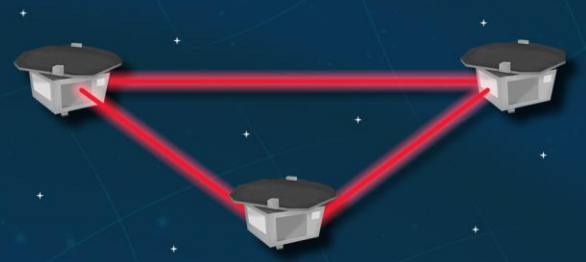

Pulsar timing array

Cosmic microwave background polarisation

Timescales

milliseconds | seconds | hours | years | billions of years

Frequency (Hz)

100 | 1 | 10^{-2} | 10^{-4} | 10^{-6} | 10^{-8} | 10^{-16}

Cosmic fluctuations in the early Universe

Cosmic sources

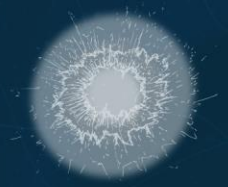

Supernova

Pulsar

Compact object falling onto a supermassive black hole

Merging supermassive black holes

Merging neutron stars in other galaxies

Merging stellar-mass black holes in other galaxies

Merging white dwarfs in our Galaxy

#lisa

LISA

Space-based gravitational wave detector

Three satellites surrounding six test masses in free fall

No seismic noise and longer arm length are good for signal sensitivity.

The arm-lengths are unequal and time-varying

which means laser noise won't cancel out

and the laser fields experience Doppler shifts in the range from -10 to 10 MHz

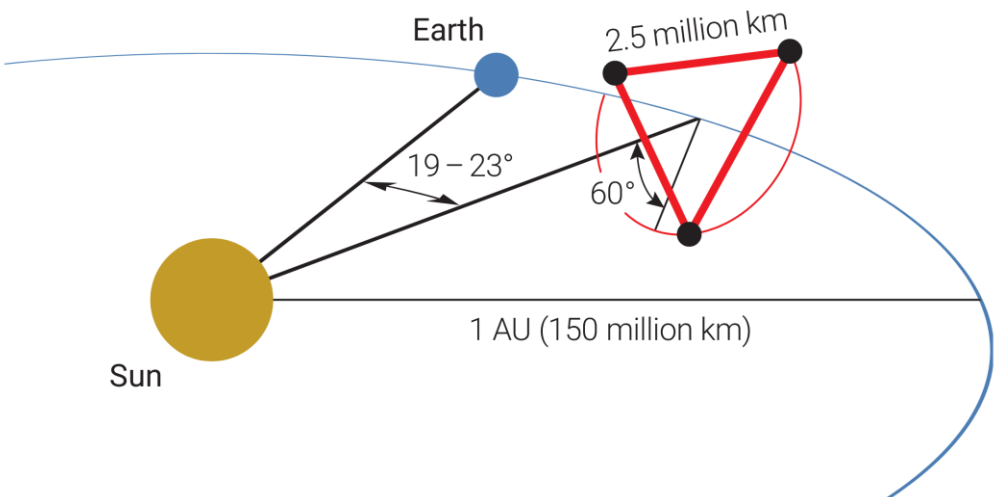

Amaro-Seoane et al., 2017

The Constellation

Each satellite houses two lasers, two optical benches and a phasemeter.

Each optical bench houses three interferometers.

The test mass to test mass distances are measured in three parts – this is the so-called split interferometry used in LISA.

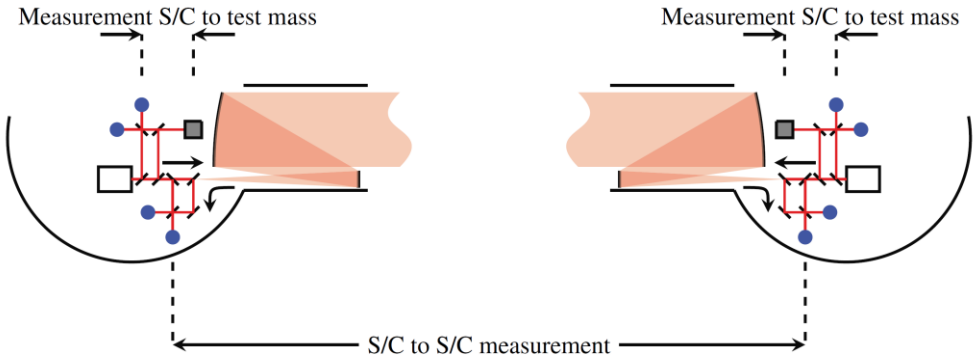

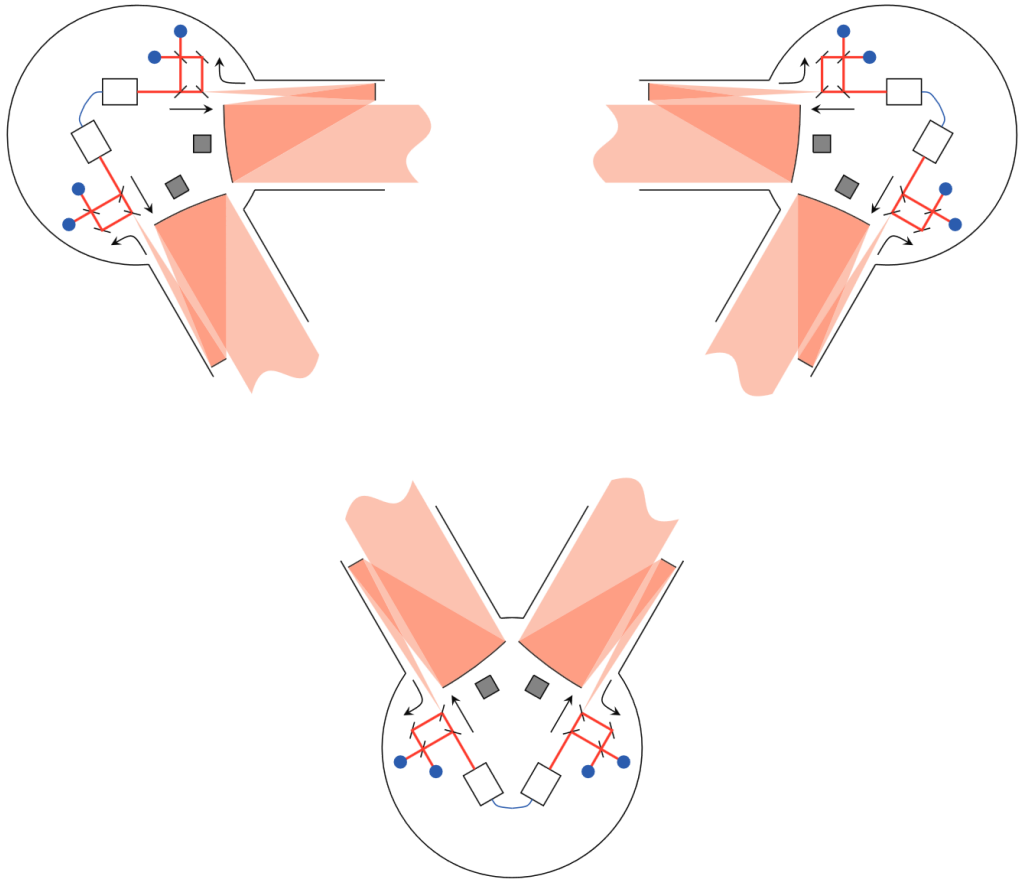

Jennrich, 2010

Internals of a LISA Spacecraft

LISA interferometric metrology system

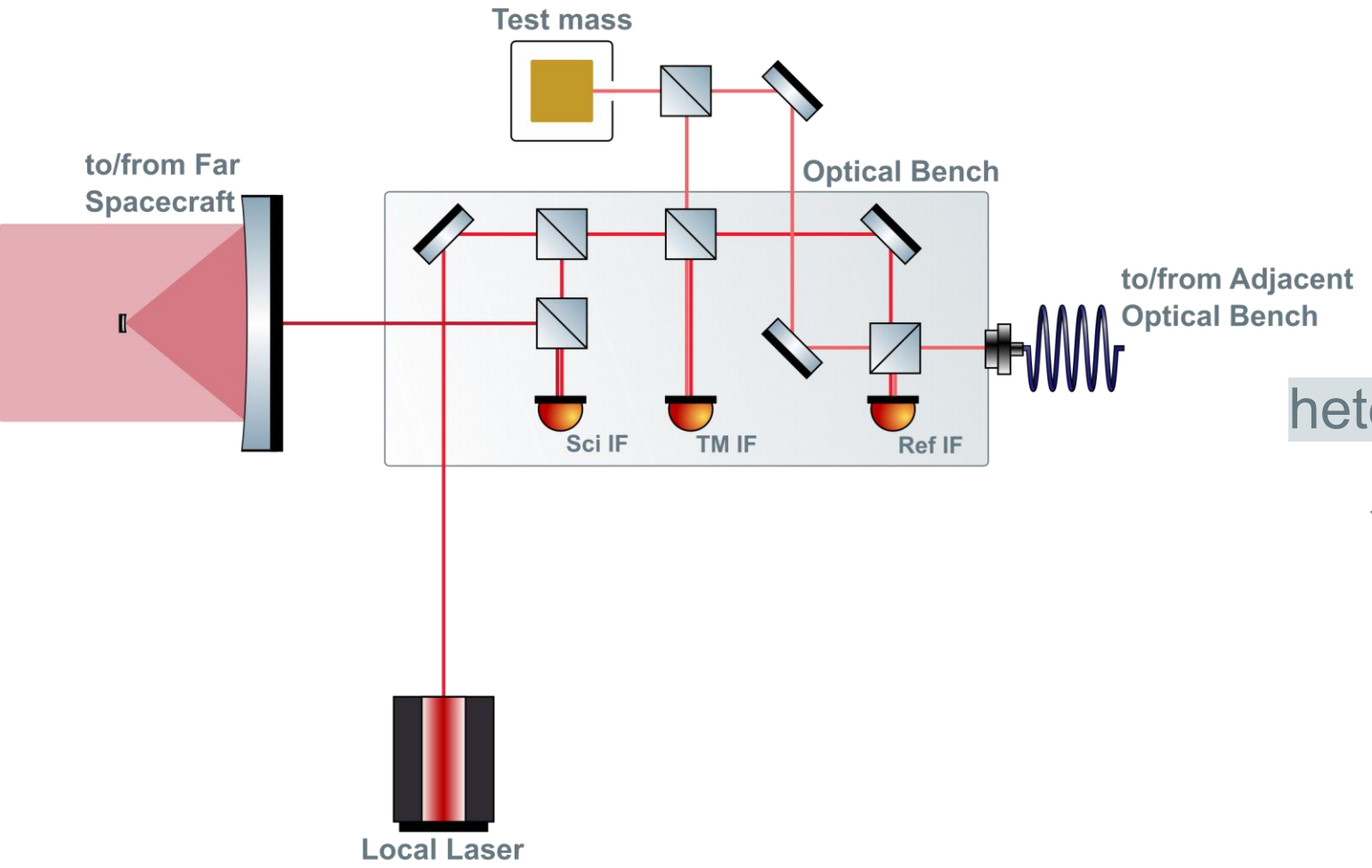

heterodyne interferometry

$$P(t) \propto |E_1(t) + E_2(t)|^2 = \\ = E_1^2 + E_2^2 + 2E_1E_2\cos((\omega_1 - \omega_2)t)$$

$$E_i(t) = E_i \exp(j\omega_i t)$$

Internals of a LISA Spacecraft

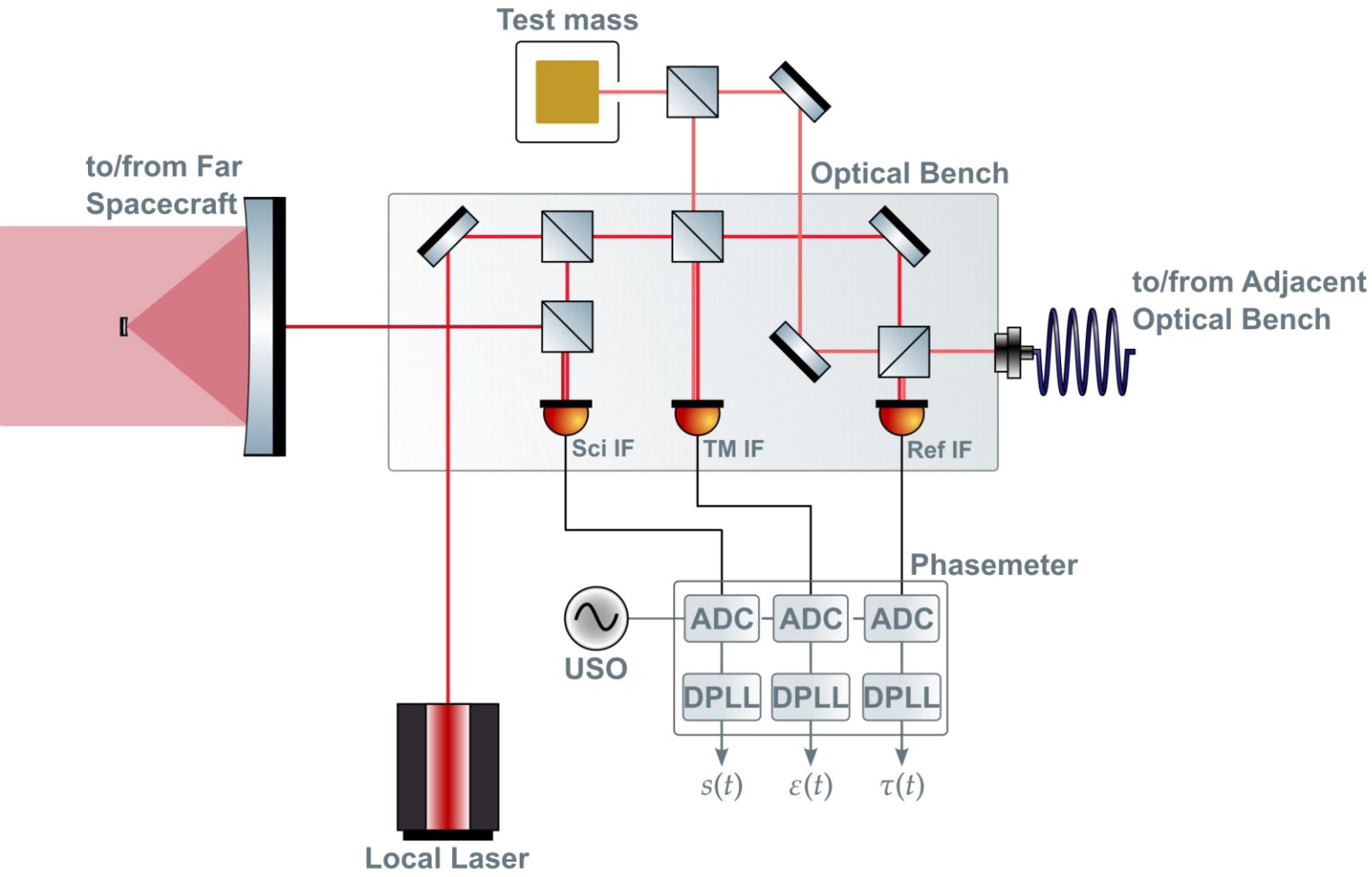

USO – Ultra Stable Oscillator

Internals of a LISA Spacecraft

GW Signal	$h(t)$
Doppler Shift	$\phi_{\text{Doppler}}(t)$
Laser Noise	$p(t)$
Clock Jitter	$q(t)$
Acceleration noise	$\phi_{\text{acc}}(t)$
Optical Bench Jitter	$\Delta(t)$
Backlink Noise	$\mu(t)$
Optical Path Length Noise	$\phi_{\text{opt}}(t)$
Electrical Noises	$\phi_{\text{el}}(t)$

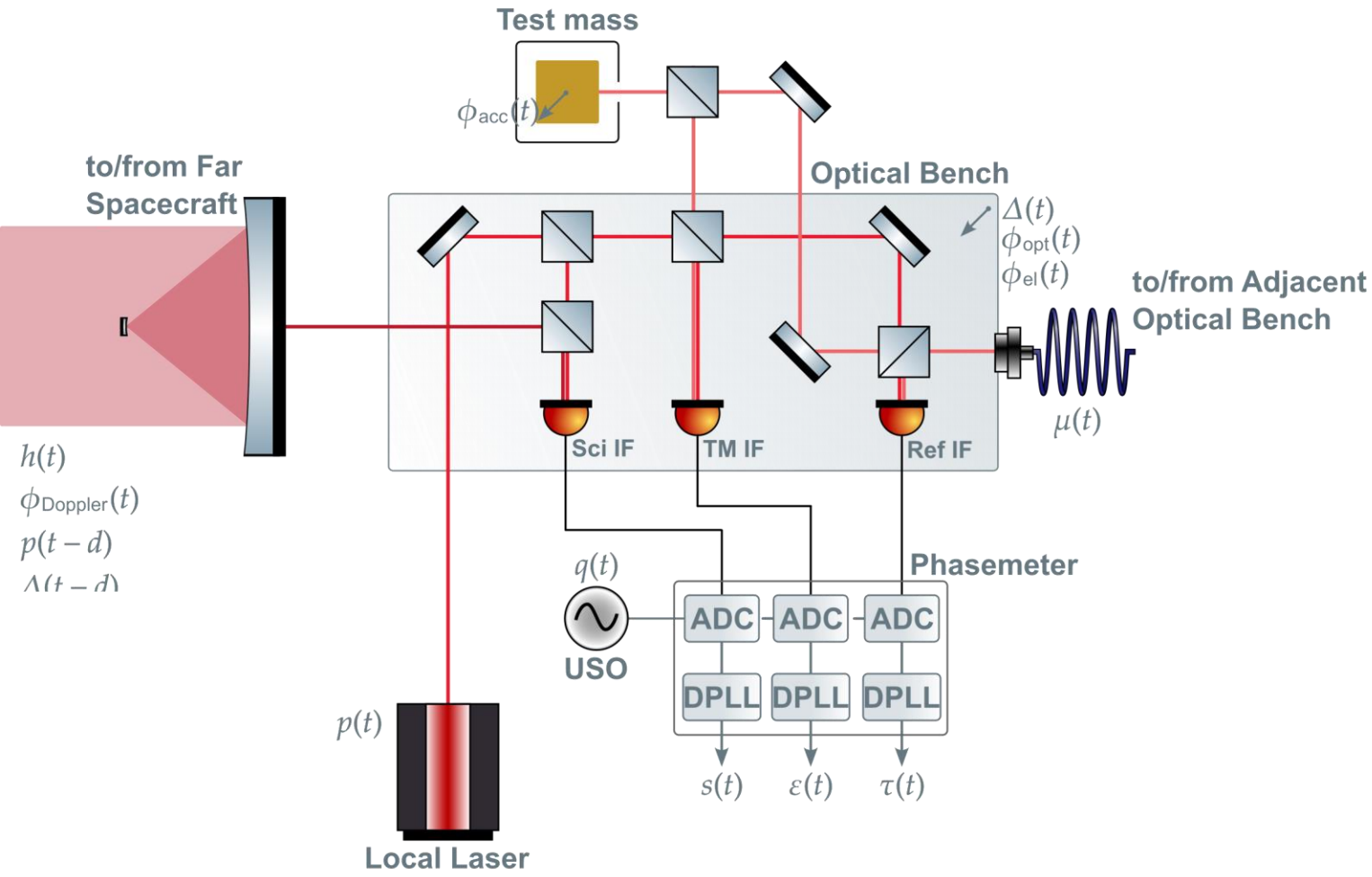

Internals of a LISA Spacecraft

$$s = s(p_2, p_1, h, q_1, \boldsymbol{\Delta}_2, \boldsymbol{\Delta}_1, \phi_{\mathrm{opt}}, \phi_{\mathrm{el}})$$

$$\varepsilon = \varepsilon(p_1', p_1, q_1, \phi_{\mathrm{acc1}}, \boldsymbol{\Delta}_1, \phi_{\mathrm{opt}}^{\varepsilon}, \phi_{\mathrm{el}}^{\varepsilon}, \mu_1')$$

$$\tau = \tau(p_1', p_1, q_1, \phi_{\mathrm{opt}}^{\tau}, \phi_{\mathrm{el}}^{\tau}, \mu_1')$$

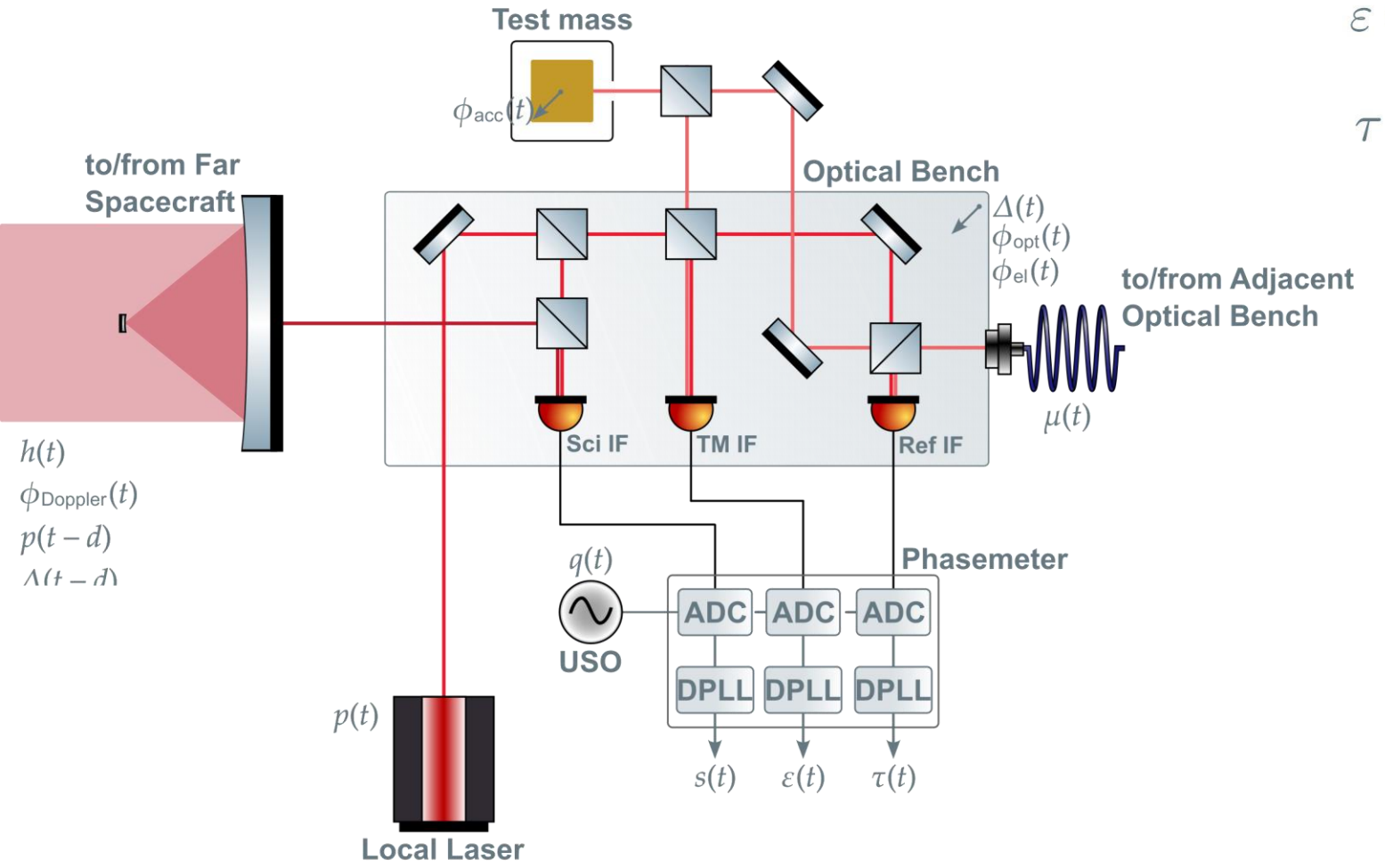

Problem: Laser Noise

MHz beatnotes must be measured at μrad precision.

The expected laser noise levels coupled into the beatnotes are expected to be orders of magnitude higher.

Solution: Time Delay Interferometry

Time Delay Interferometry (TDI) is a cluster of methods to construct virtual equal arms in post-processing.

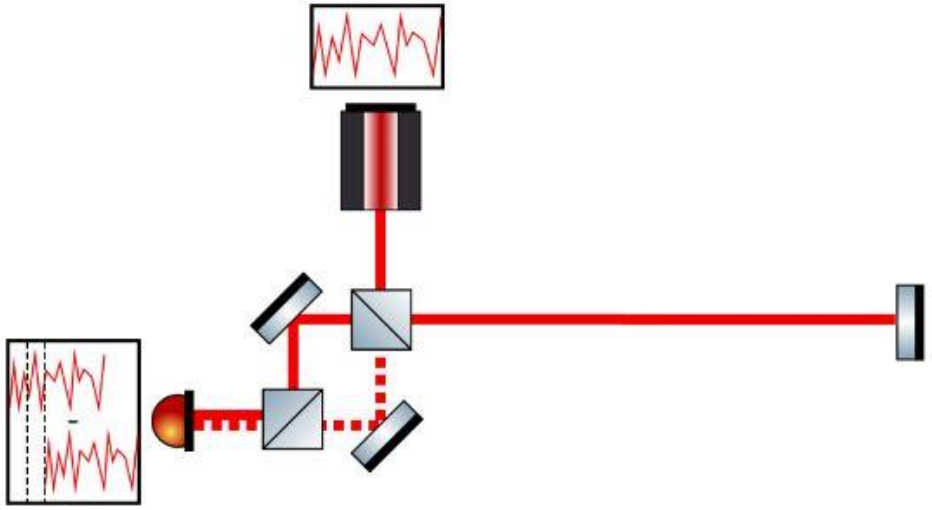

Transponder signal

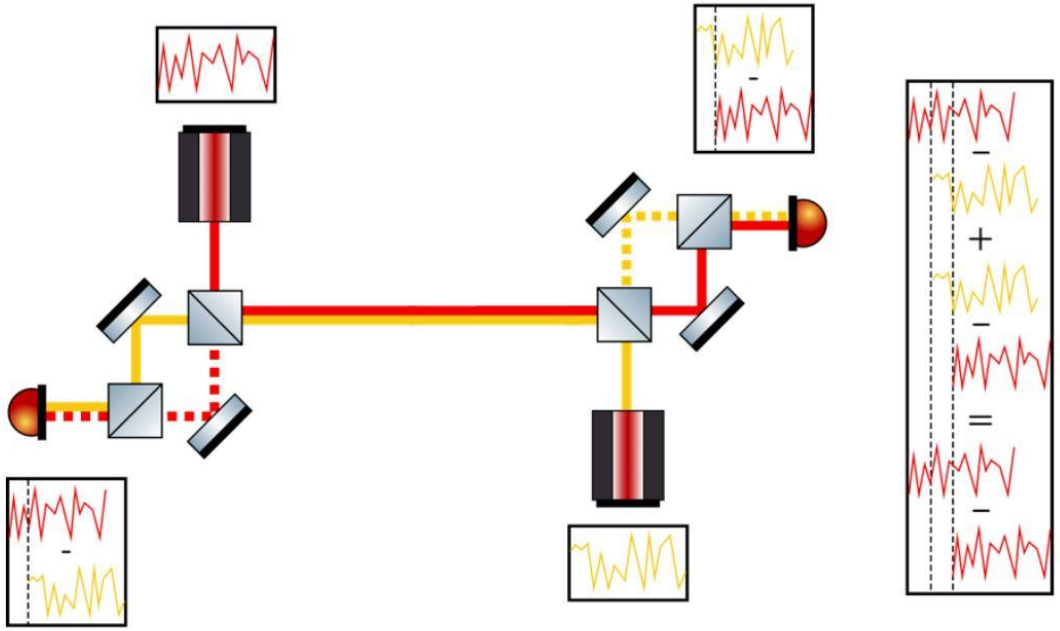

Virtual transponder signal

Hartwig, 2021

Solution: Time Delay Interferometry

Time Delay Interferometry (TDI) is a cluster of methods to construct virtual equal arms in post-processing.

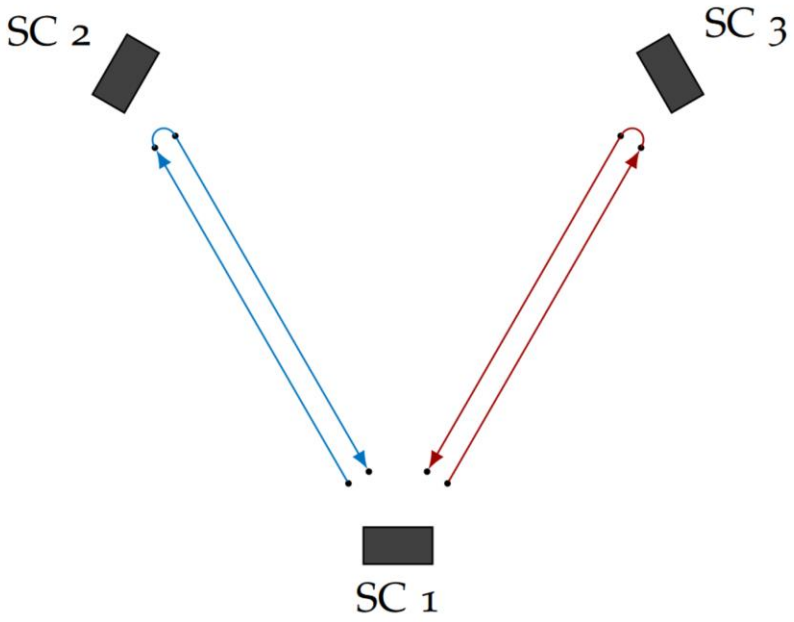

0th generation TDI X combination, equal unchanging arm lengths

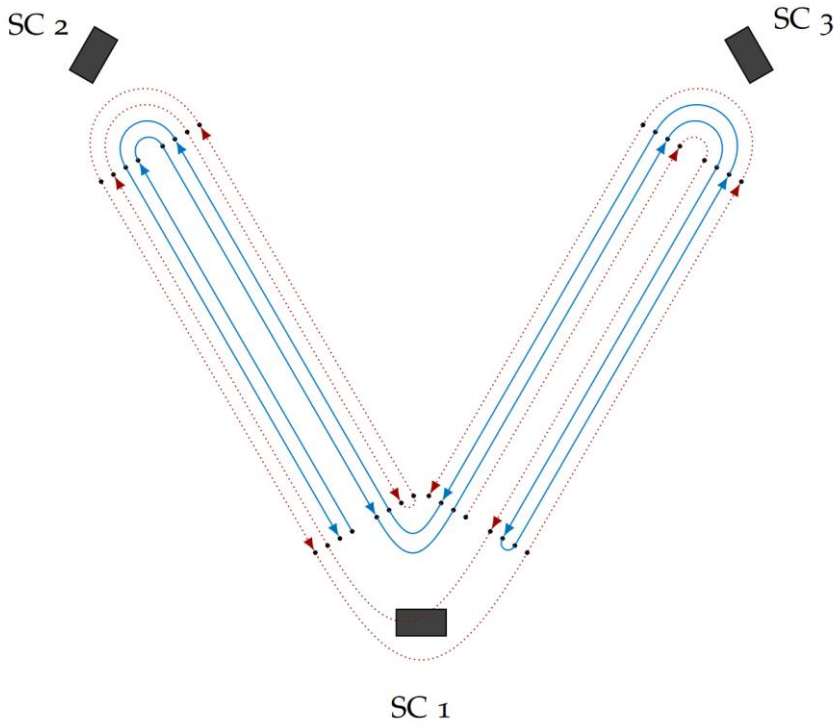

In practice, 2nd generation combinations should suppress noise enough to meet the requirement.

Hartwig, 2021

Problem: Clock Jitter

Mechanism for clock noise coupling into the phase measurement

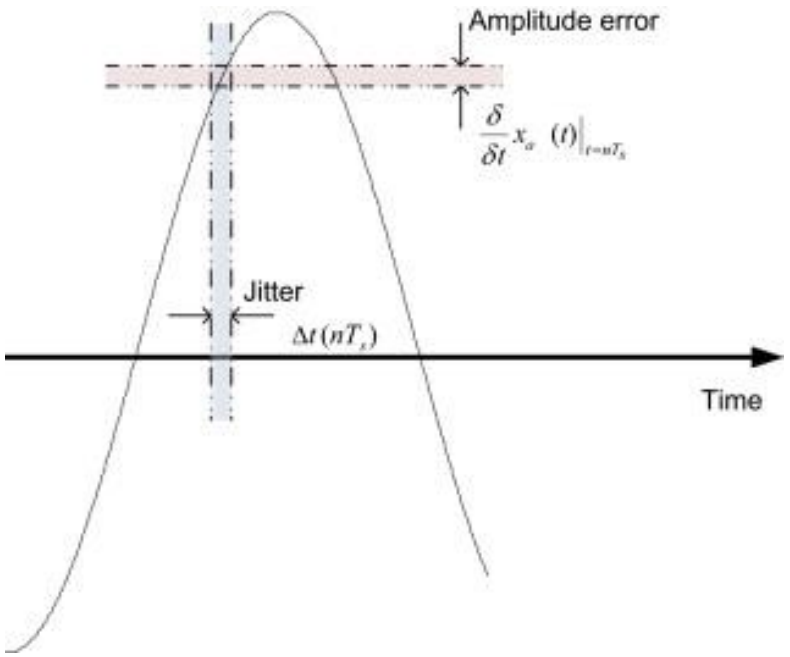

Linear Circuit Design Handbook, 2008

Top of the notch clock performance (2014)

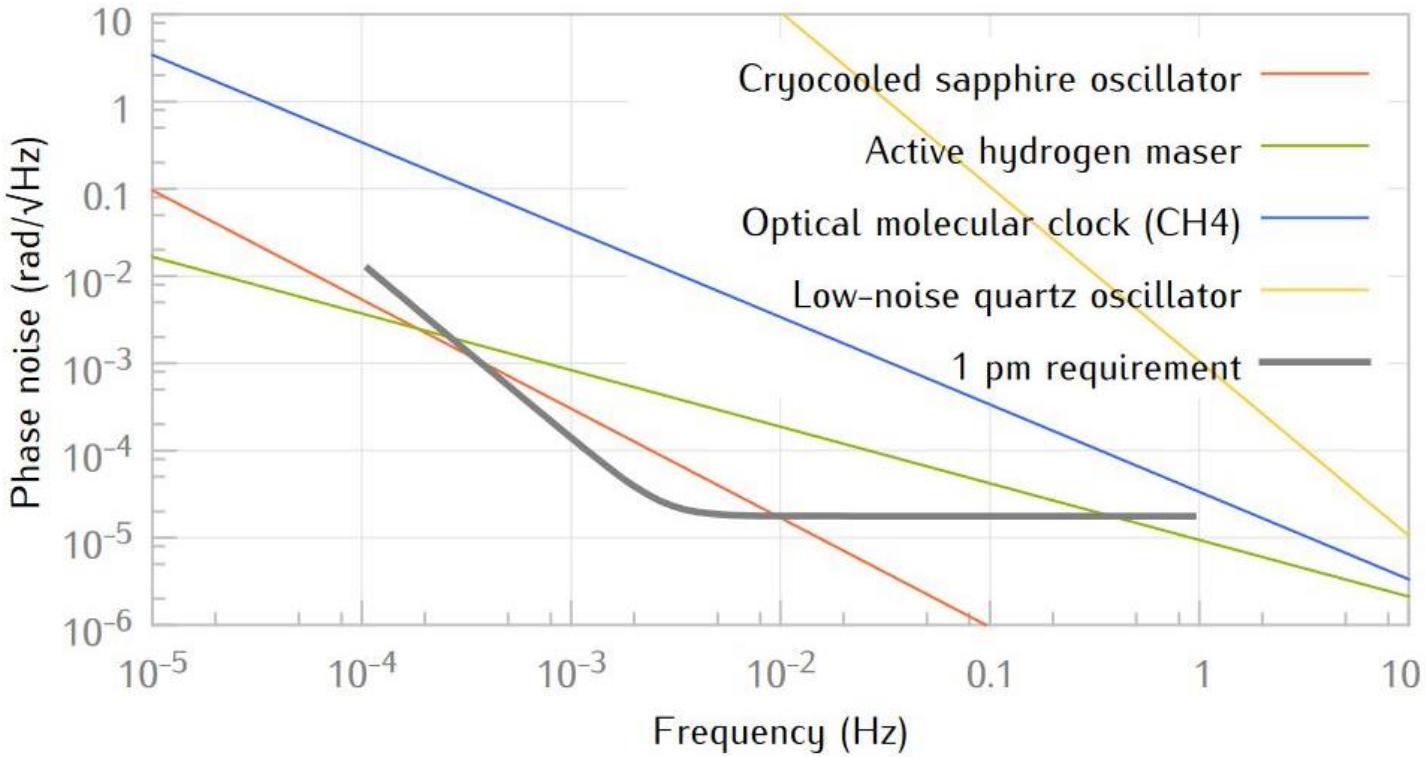

Lisa metrology system-final report, 2014

Solution: The Sidebands

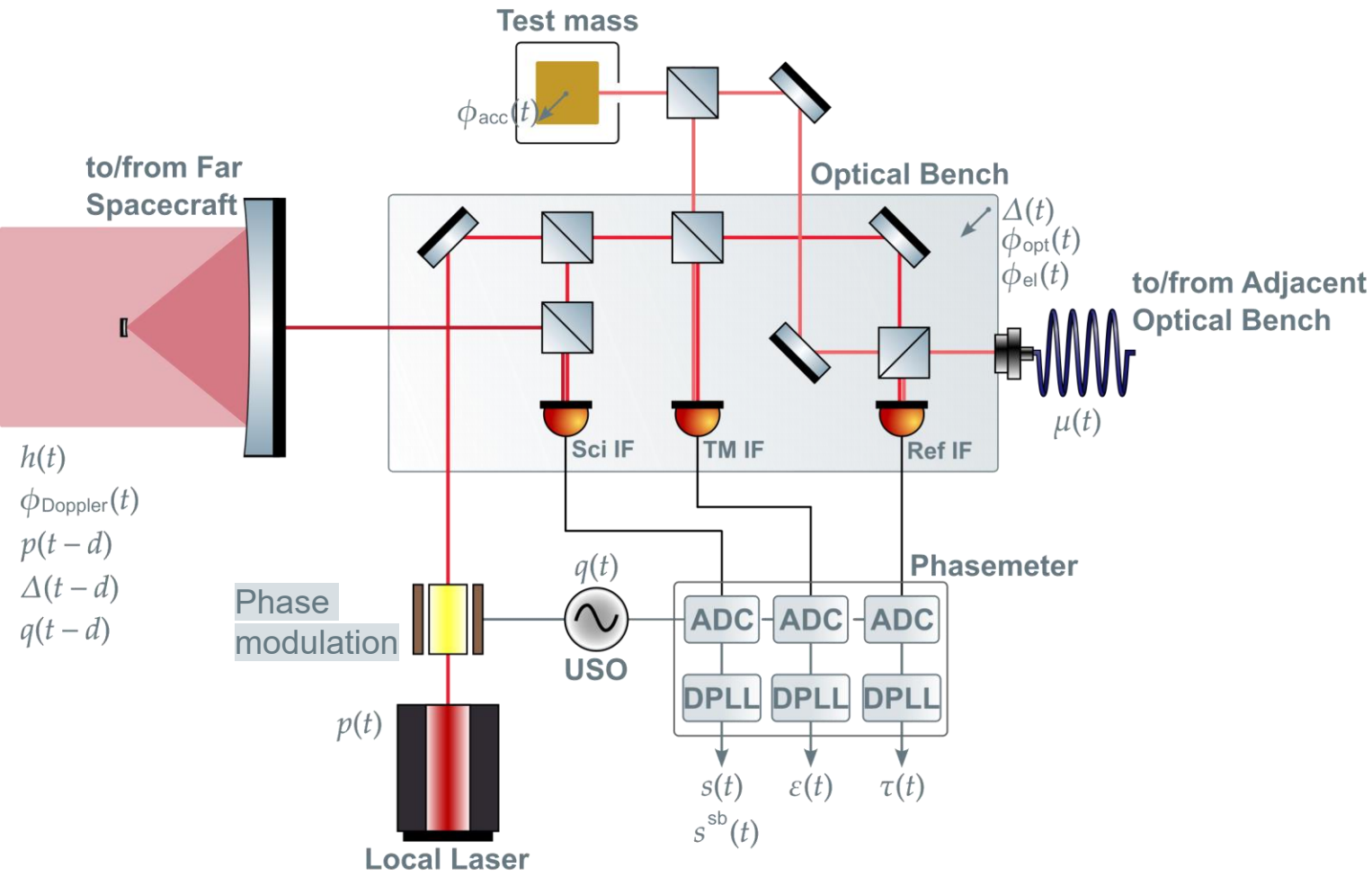

Solution: The Sidebands

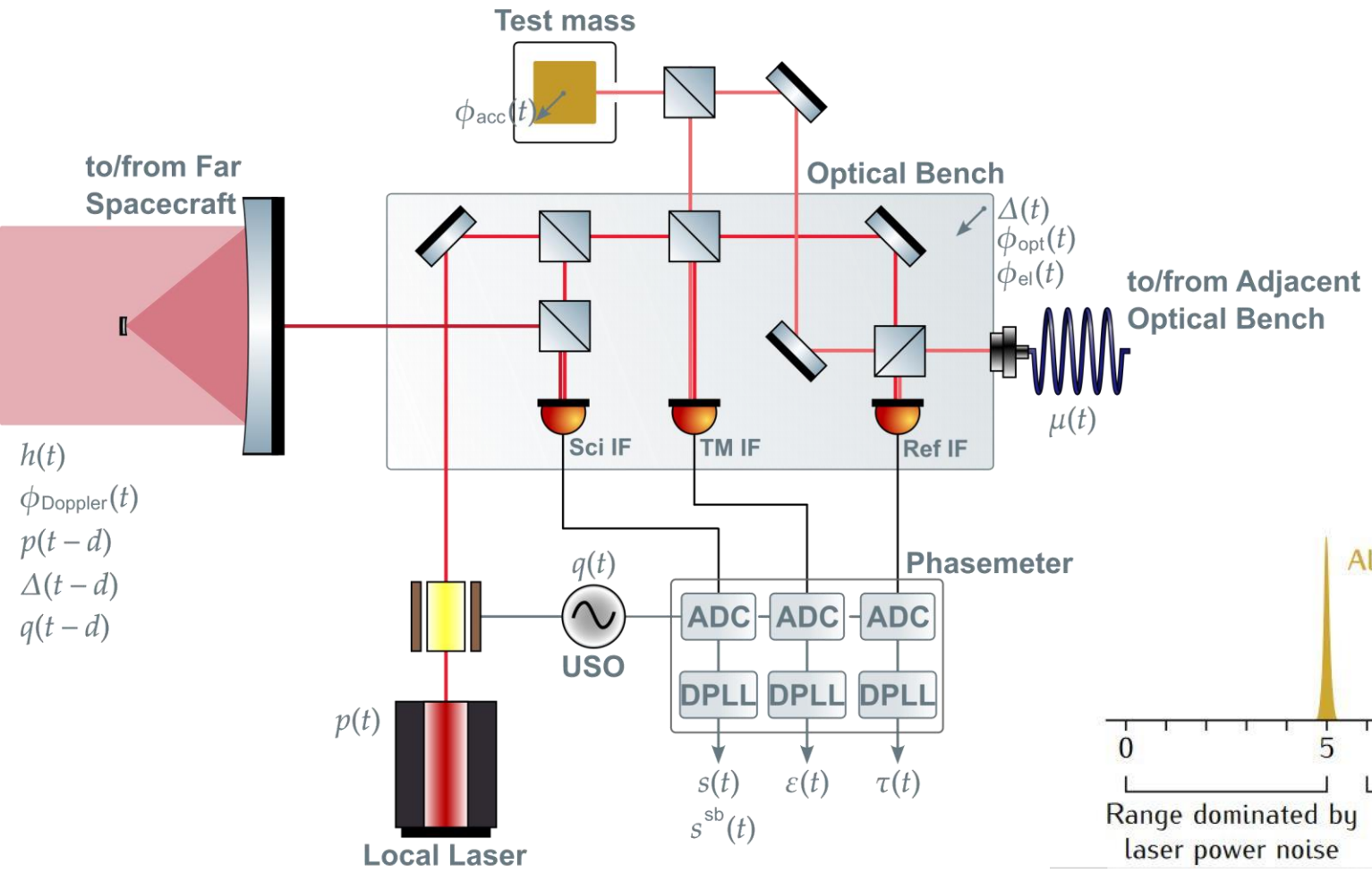

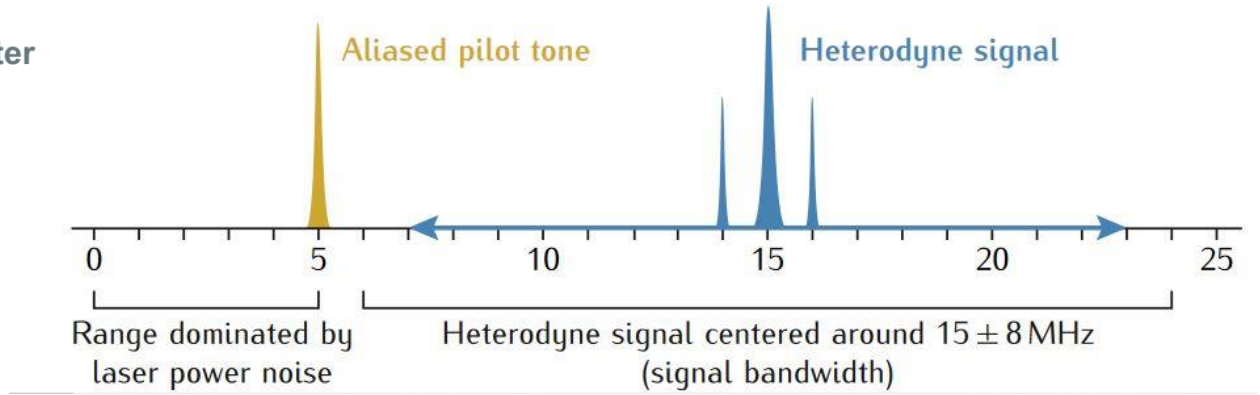

Lisa metrology system-final report, 2014

Solution: The Sidebands

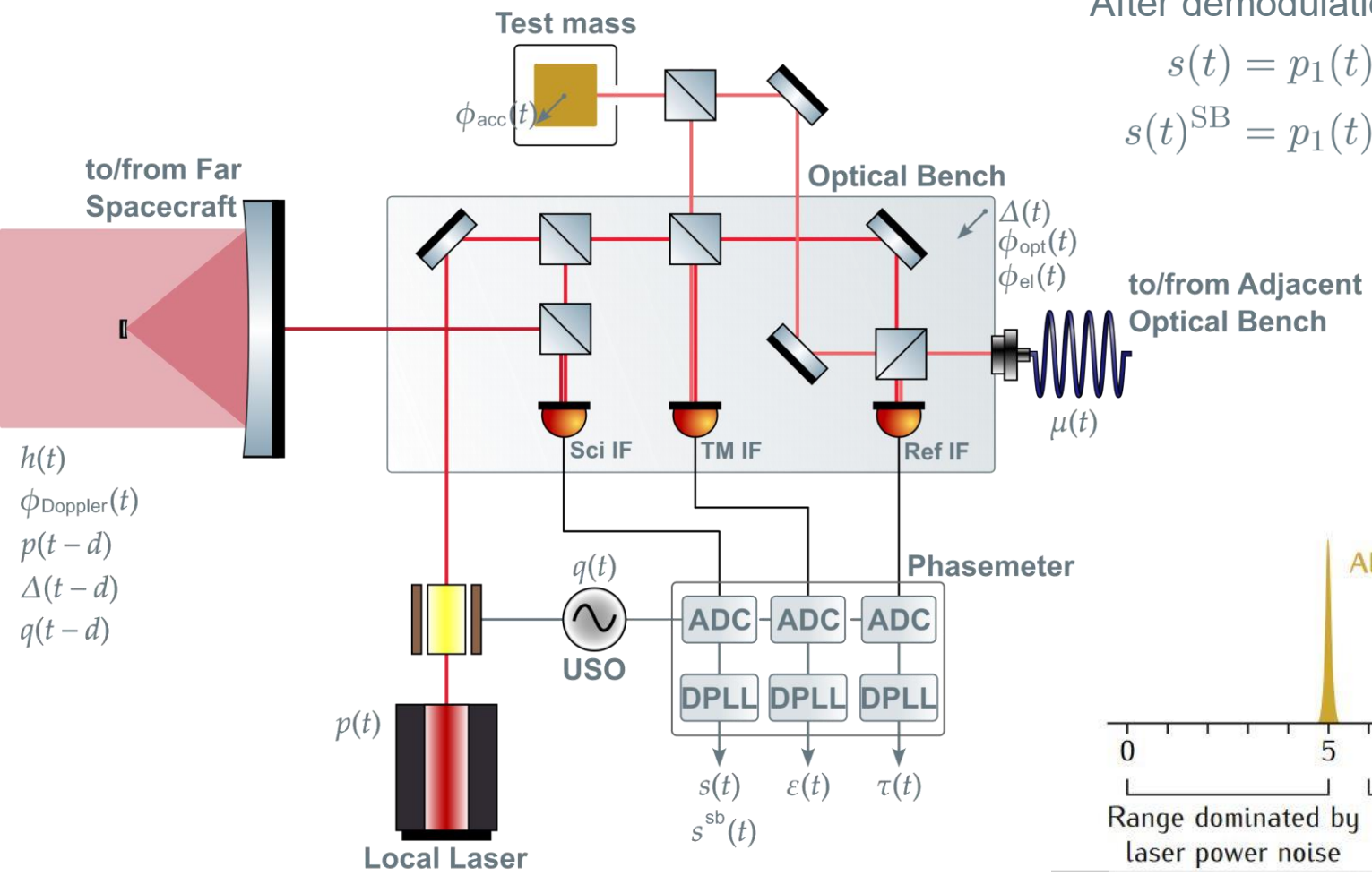

After demodulation, considering laser noise and clock jitter:

$$s(t) = p_1(t) + p_2(t - \tau_{12}) + \alpha_1 q_1(t)$$

$$s(t)^{\mathrm{SB}} = p_1(t) + p_2(t - d_{12}) + \beta_1 q_1(t) + \beta_2 q_2(t - d_{12}) + \alpha_1^{\mathrm{SB}} q_1(t)$$

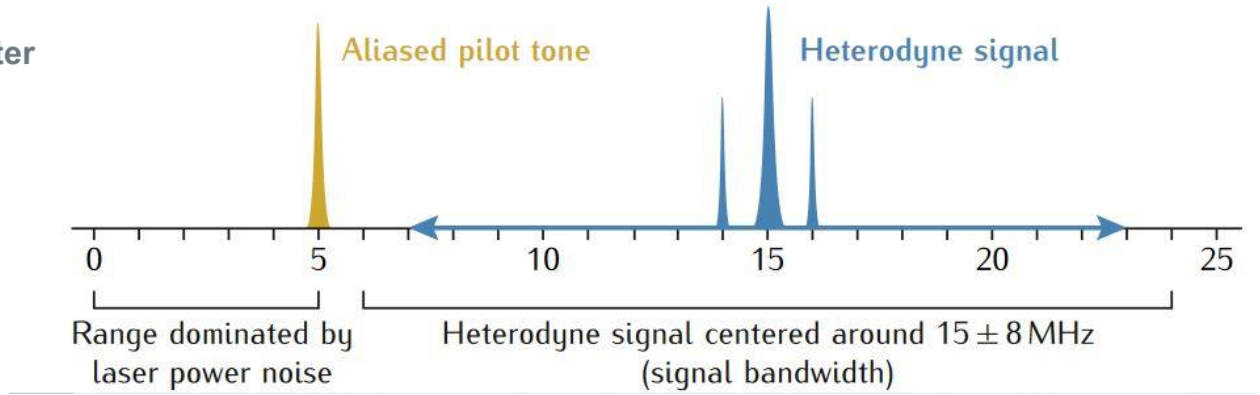

Lisa metrology system-final report, 2014

Previous Experiments

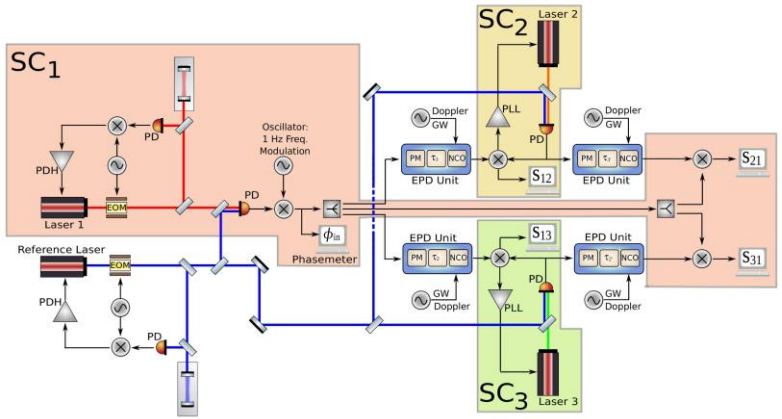

Mitryk, 2012: Laser Noise Mitigation through Time Delay Interferometry for Space-based Gravitational Wave Interferometers Using the UF Laser Interferometer

Laser noise, No Clock Jitter, Realistic Delay

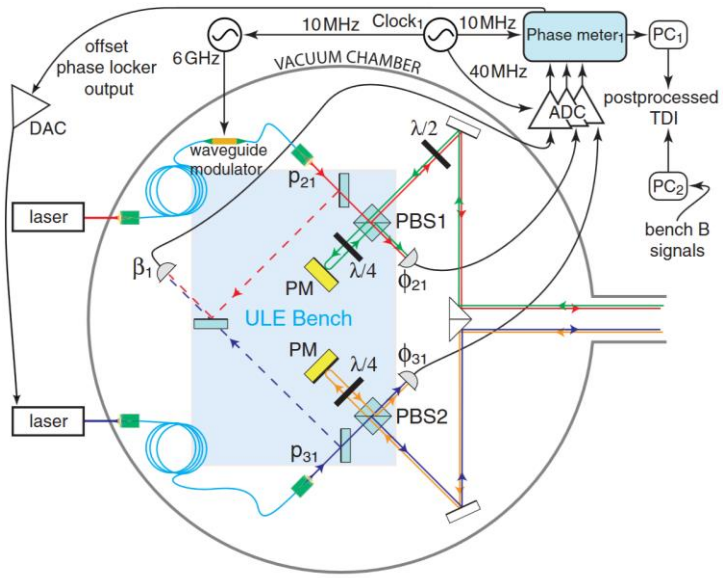

De Vine et al., 2010: Experimental Demonstration of Time-Delay Interferometry for LISA, JPL

Laser noise, Clock jitter, No delay

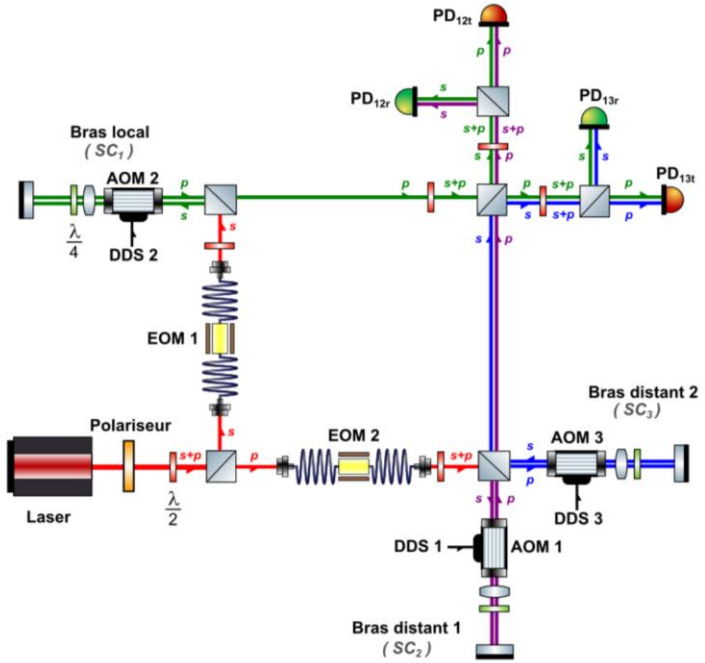

Vidal, 2023: Validation expérimentale des performances interférométriques de LISA, Paris

Laser noise, No Clock Jitter, Realistic Delay

MiniLISA

Our goal is to simulate the LISA signal flow chain with realistic laser phase noise and clock jitter.

In other words, we want to test the combination of second generation TDI and the clock noise removal post processing methods on experimental data.

Previous systems have not included the combination of realistic laser noise, clock jitter and time delay.

Our TDI Testbed

Set up for generating one LISA-like beatnote

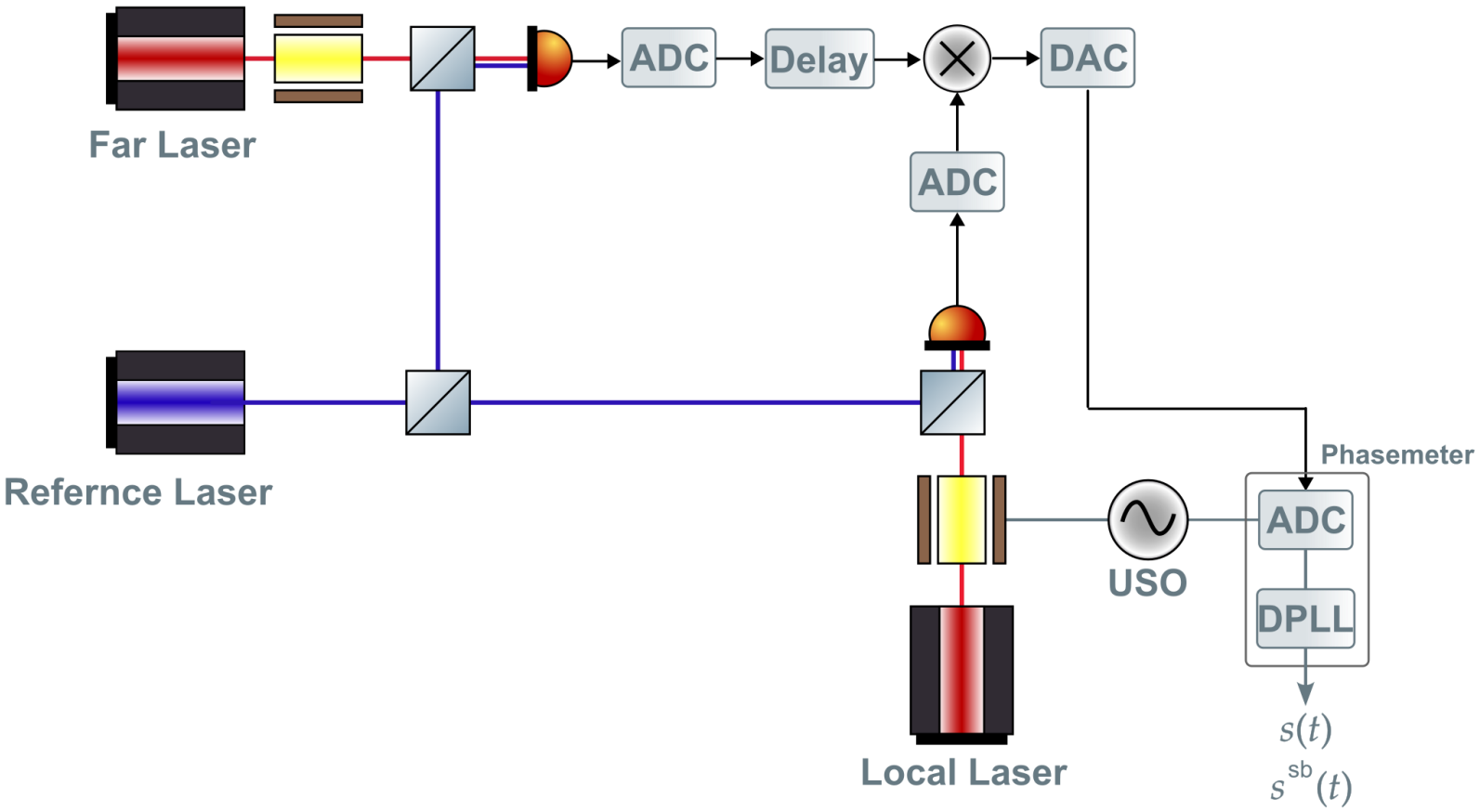

Our TDI Testbed

Set up for generating one LISA-like beatnote

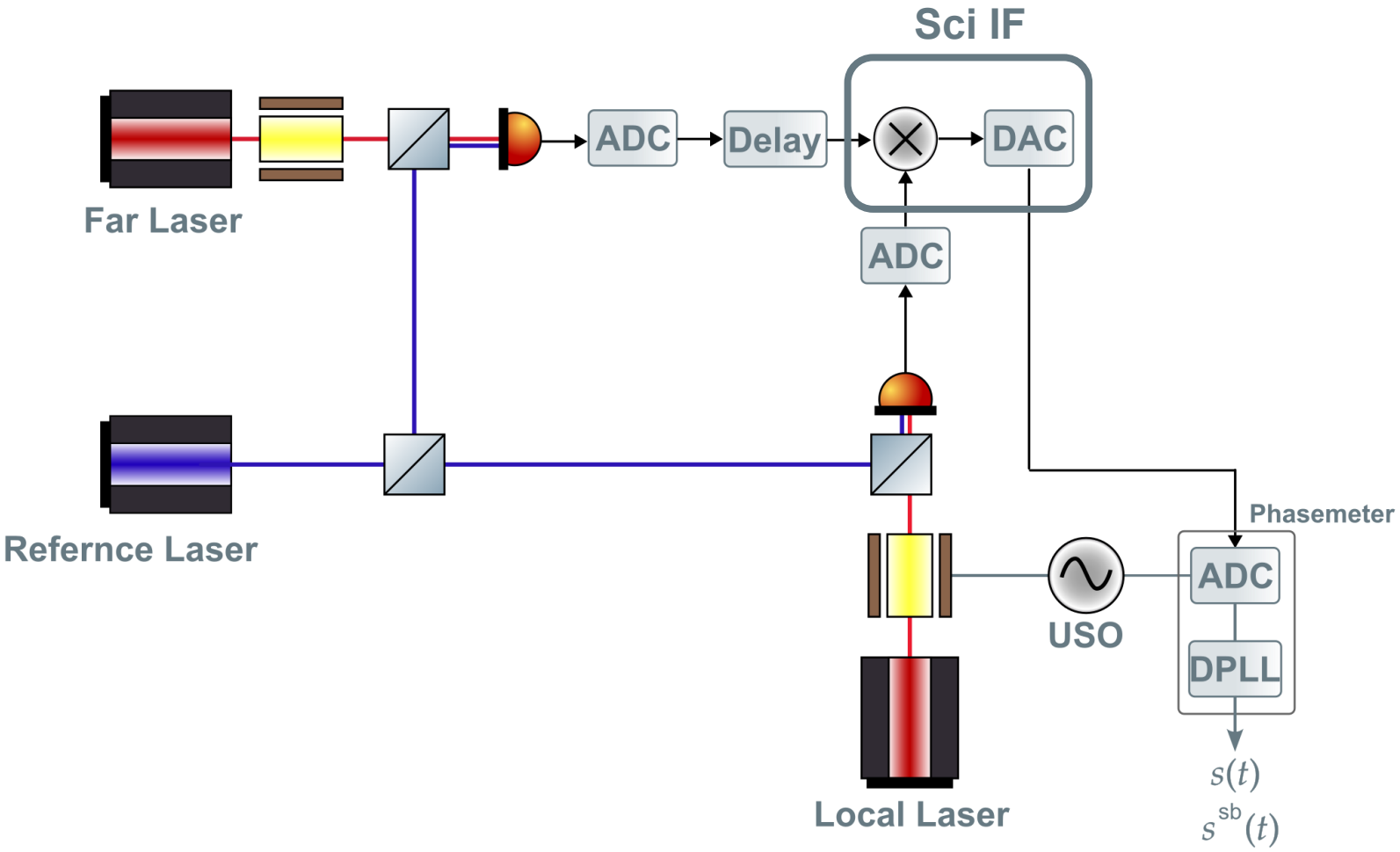

Our TDI Testbed

Set up for generating one LISA-like arm link

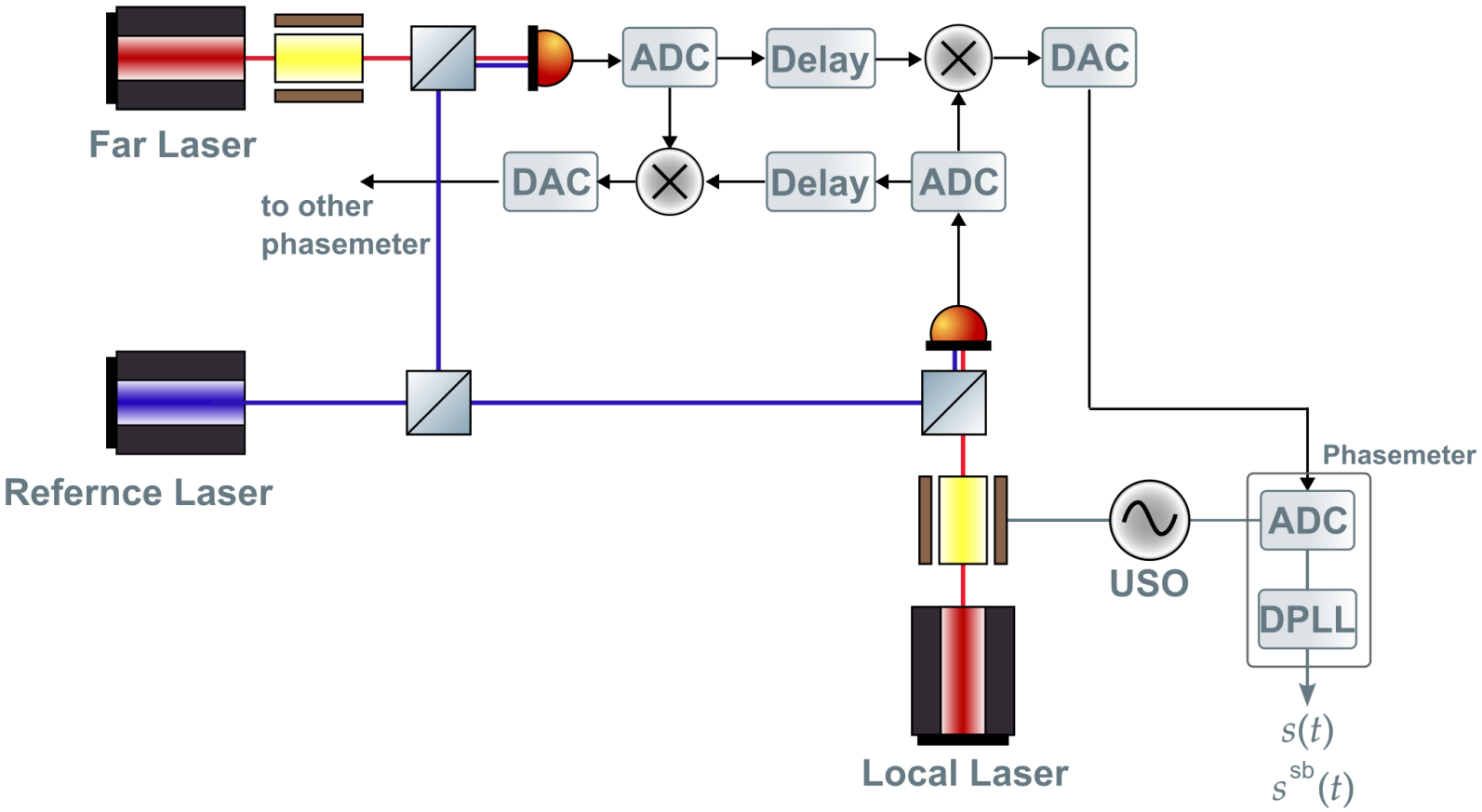

Our TDI Testbed

Set up for generating one LISA-like arm link

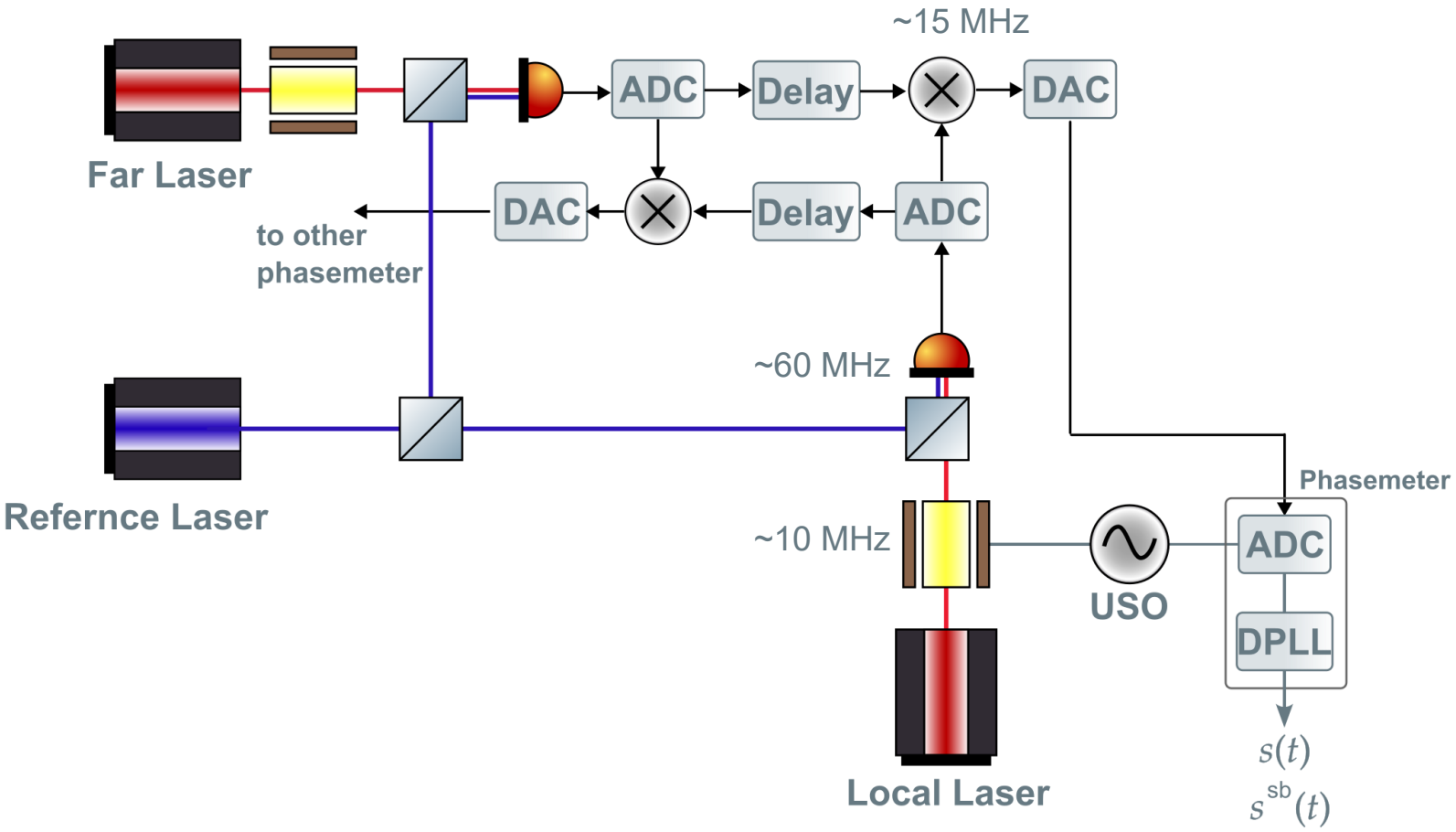

The Delay Line

The delay is added to a digital signal (not an optical).

The added varying delays, gravitational wave signals and Doppler shifts are controllable via a Python based interface.

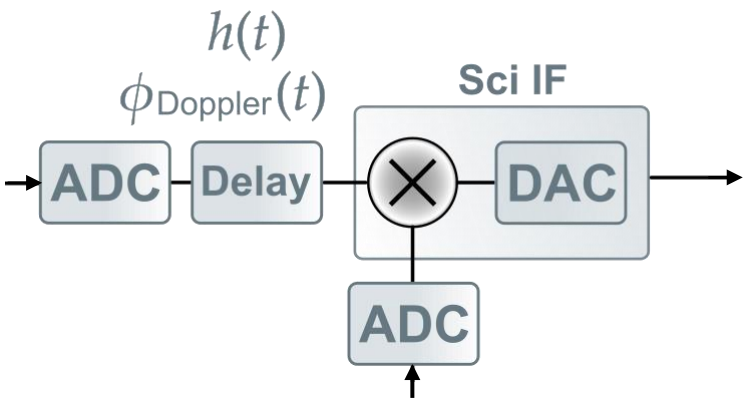

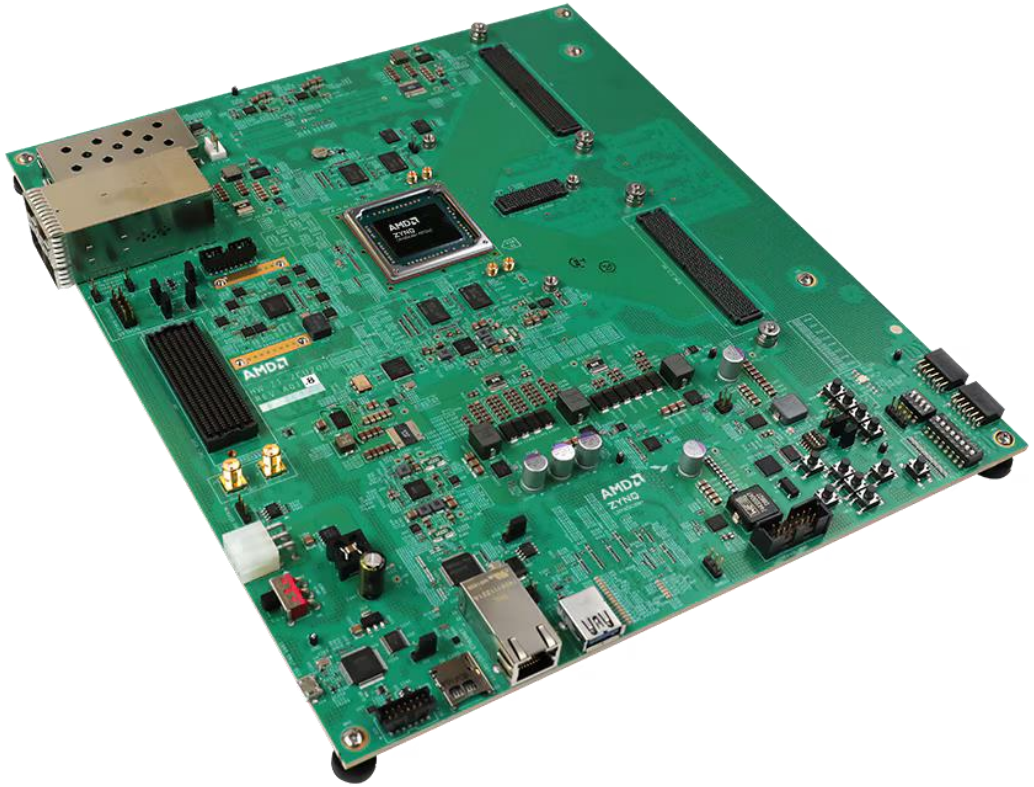

AMD Zynq™ UltraScale+™ RFSoC ZCU208 Evaluation Kit

Signal Processing on the Delay Line

The evaluation board includes enough to take in two photodetector readings and output the corresponding LISA-like beatnote as an electrical signal.

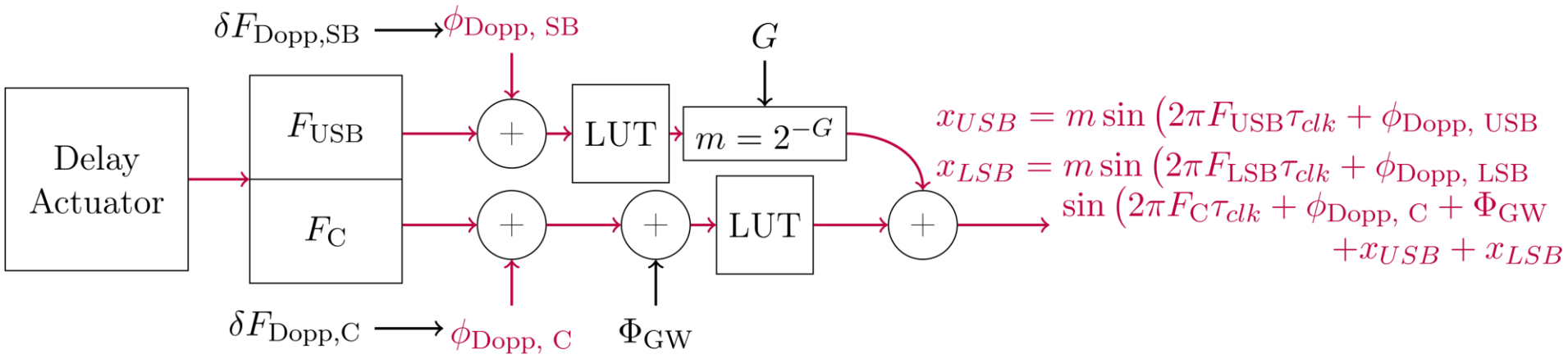

Figure 1: Block diagram of Doppler- and GW-derived phase modulation of the carrier after the delay.

Credit: Reid Ferguson

Delay Line Integrity

Main noise source is the clock jitter, which couples into the beatnotes.

This won't be suppressed by TDI or the clock noise removal and an extra measurement is likely needed.

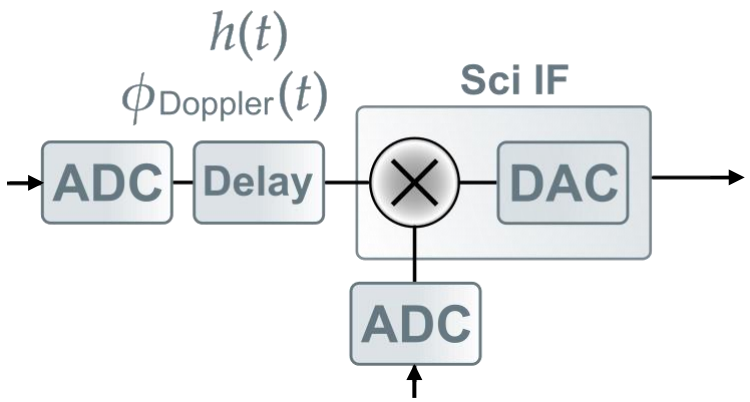

The Phasemeters

Red Pitaya running LISA gateware

Not space-qualified, but enables MHz phase readout

ADC is noisier than LISA's frontend, but pilot tone correction helps

Each board has two inputs and two outputs.

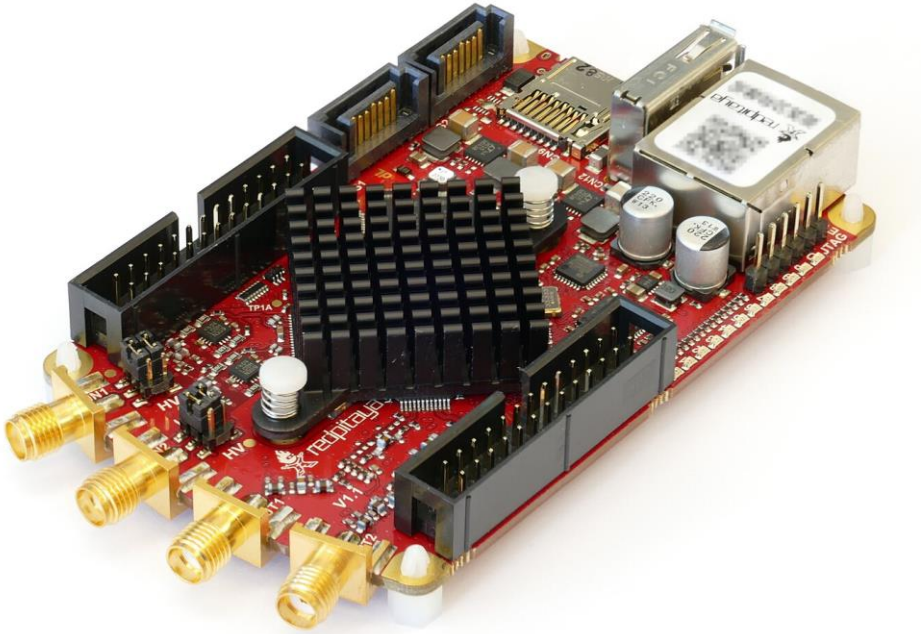

Red Pitaya

Two-arm Testbed

The full experiment consists of four lasers: three represent the spacecrafts and one is used to generate “temporary beatnotes”.

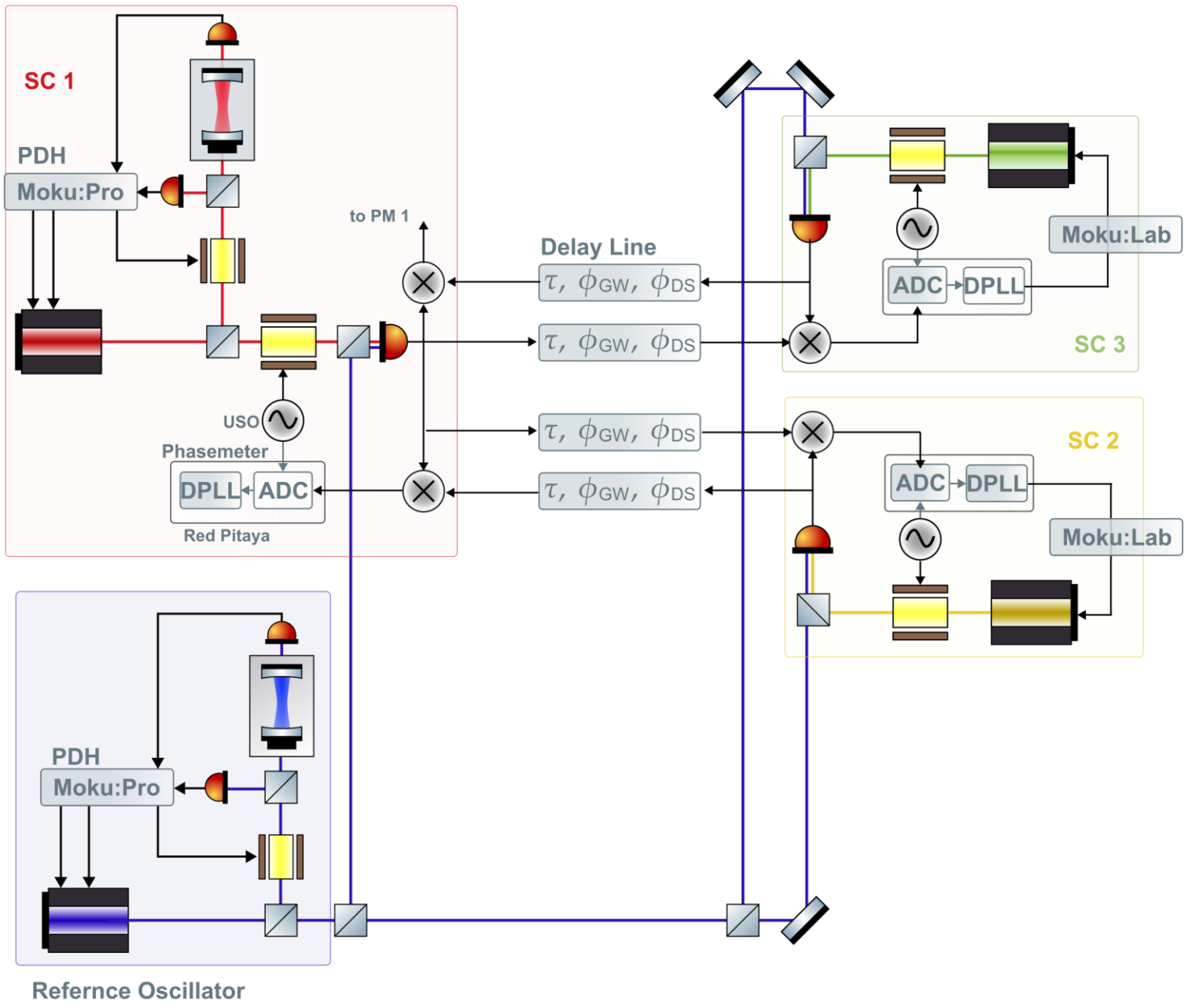

Two-arm Testbed

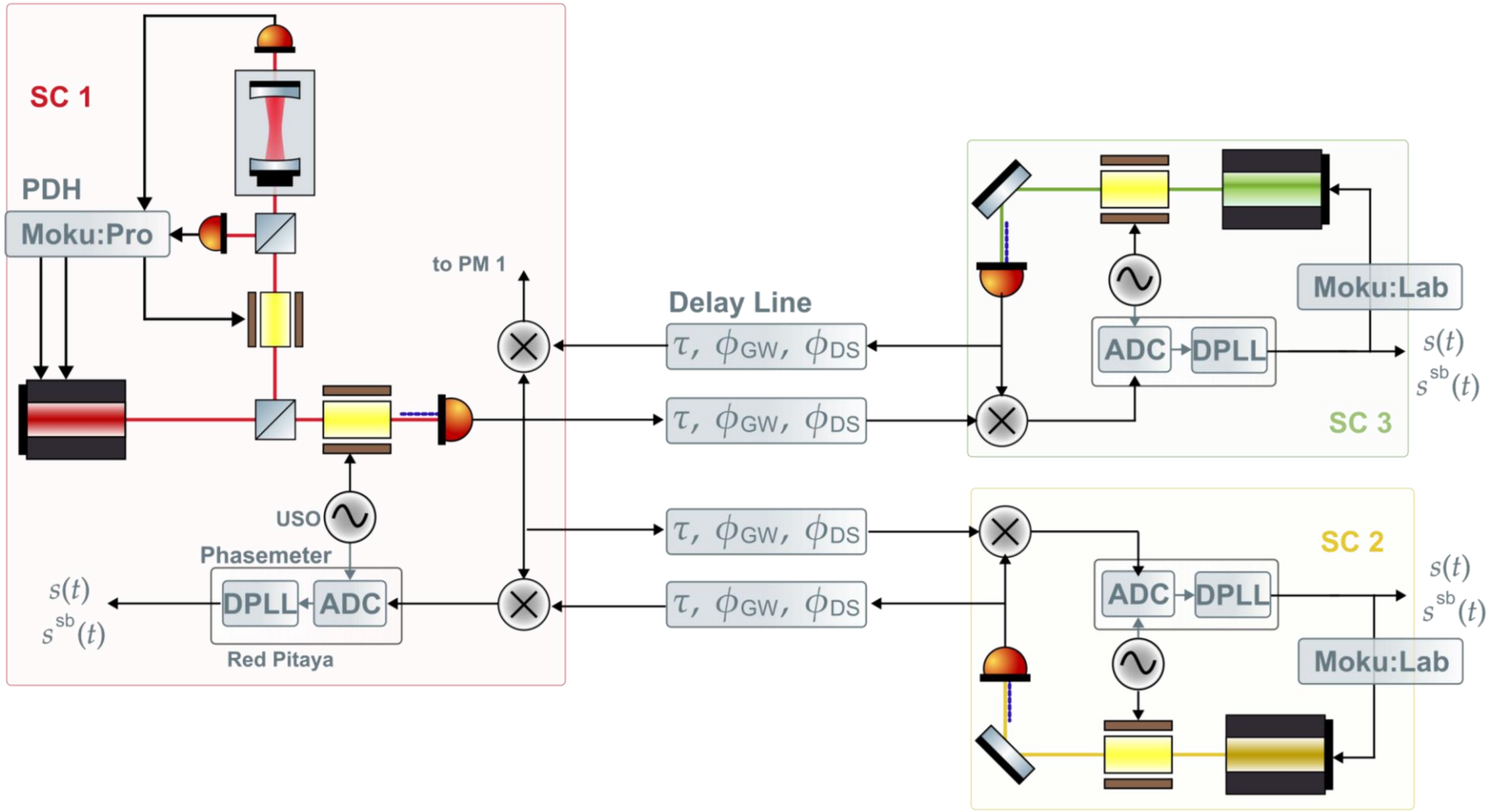

Assumptions

- (Ranging is perfect)
- Test mass to spacecraft distance measurement is perfect
- No optical bench jittering
- Adjacent/local lasers are perfectly locked
- No backlink noise

Experimental Milestones

Laser Characterization

- Measure free-running laser phase noise PSD
- Lock two lasers to optical cavities
- Measure cavity-locked laser noise — aim for LISA-level performance

Arm Setup

- Test transponder signal to verify baseline delay chain behavior
- Create first arm link
- Create second arm link for full TDI X

TDI Processing

- Calculate TDI combinations and clock-noise corrected PSDs
- Compare results to expected suppression factors

Technical noises

Need to be characterized

- EOM phase noise
- Thermal drift and cavity length noise
- Photodetector noise

May need additional measurements for cancelling out

- Delay line clock noise

Preliminary Optical Layout

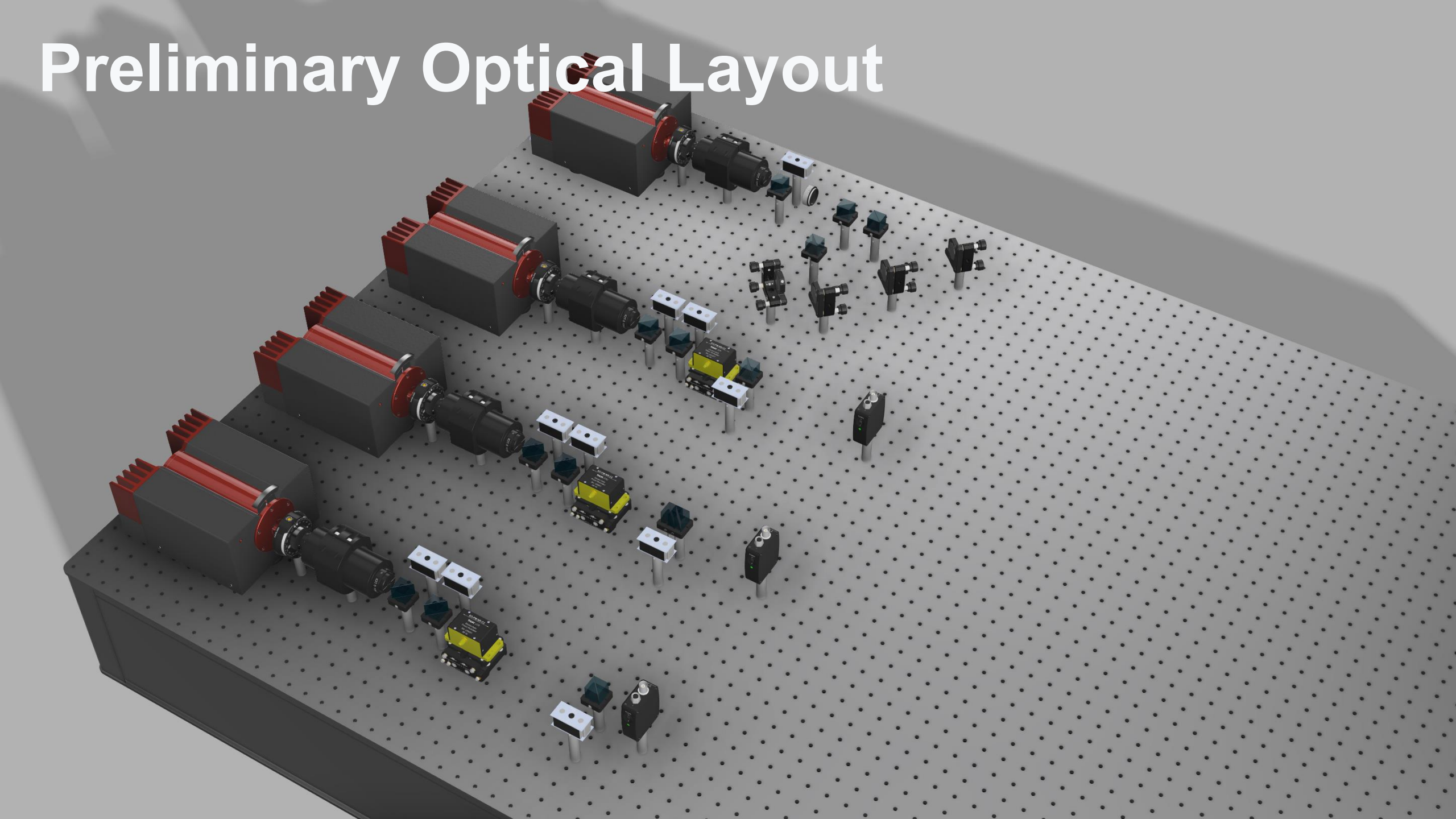

Thank you for listening!

Why not all three-arm links?

- Beatnotes will fall out of 6 to 24 MHz range.

The beat notes

- Write them out
- Talk about what the 1 laser per SC means.