Baseline Analysis Notes

February 5, 2026

0.1 MODIFIED PAPER EXCERPT: Baseline Performance

To characterize the performance of the delay line, we use the experimental setup shown in the left side of Fig. 1. A signal (red) at frequency ω_s with phase ϕ_s generated by a Moku:Lab. The delay line is programmed with a static delay τ; no offsets are applied. The signal is then sampled by the delay line board, picking up $-\omega_s \delta t_D(t)$. **These jitters, δt, couple in with a minus sign when a signal is *digitized* by an ADC and with a plus sign when it is *synthesized* by a DAC.** Upon re-synthesis it picks up $+\omega_s \delta t_D(t)$, but still contains the phase jitter $-\omega \delta t_D(t-\tau)$. When digitized by the Moku phasemeter, it finally picks up $-\omega_s \delta t_M(t-\tau)$ (purple). The phase of the measured (delayed) signal ϕ_τ with frequency ω is therefore given by

$$\begin{aligned}
\phi_\tau(t) &= \phi_s(t-\tau) \\
&\quad + \ \omega_s(t-\tau) \cdot \Big(\delta t_M(t-\tau) - \delta t_D(t-\tau)\Big) \\
&\quad + \ \omega_s(t)\Big(\delta t_D(t) - \delta t_M(t)\Big) \\
&= \mathbf{D}_\tau \phi_s(t) + \ (1 - \mathbf{D}_\tau)\, \omega_s \cdot (\delta t_D(t) - \delta t_M(t))\,, \qquad (1)
\end{aligned}$$

where physical electronic signal travel time (e.g., in cables) is assumed to be a constant offset to the programmed time and is thus subsumed within τ.

A split off from the Moku:Lab is sent directly to the Moku Phasemeter:

$$\begin{aligned}
\phi_1 &= \phi_s(t) - \omega(t) \cdot \delta t_M(t) \\
\rightarrow \phi_s(t) &= \phi_1 + \omega_s(t) \cdot \delta t_M(t) \qquad (2)
\end{aligned}$$

The differential timing jitter can be measured by generating a tone on the delay board via Direct Digital Synthesis (DDS) and measuring it (green in Fig. 1), whereby it picks up the relevant jitters:

$$\begin{aligned}
\phi_{\text{DDS}} &= \omega_{\text{DDS}} \cdot (t + \delta t_D(t) - \delta t_M(t)) \\
&= \phi_{0,\text{DDS}} + \tilde{\phi}_{\text{DDS}} \qquad (3) \\
&\rightarrow \delta t_D(t) - \delta t_M(t) = \tfrac{\phi_{\text{DDS}}(t)}{\omega_{\text{DDS}}(t)}
\end{aligned}$$

The DDS signal is superimposed onto the delayed signal, but the phasemeter must measure them with different ADCs. This could arise as differential noise due to nonlinear effects that differ between ADC channels.

Doing some algebra:

$\phi_\tau = \mathcal{D}_\tau \phi_1 - \mathcal{D}_\tau \left[\omega_s(t) \cdot \frac{\phi_{\mathrm{DDS}}(t)}{\omega_{\mathrm{DDS}}(t)} \right] + \mathcal{D}_\tau \omega_s(t) \cdot \left[\frac{\phi_{\mathrm{DDS}}(t)}{\omega_{\mathrm{DDS}}(t)} \right]$

To analyze the noise in a measurement $x(t)$ and connect it to physical processes via power series in f, it is often convenient to look at its spectral density S, which is defined by

$$S[x](f) \triangleq |\tilde{X}(f)|^2, \tag{4}$$

where $\tilde{X}(f)$ is the Fourier transform of x. Theoretically, this requires infinite measurement time to have a full continuity of frequencies. The power spectral density (PSD) estimate of the signal is practically given by

$$S = \lim_{T \to \infty} \frac{1}{T} |\tilde{X}_T(f)|^2, \tag{5}$$

where $\tilde{X}_T(f)$ is the Fourier transform of $x(t)$ windowed around the measurement time T.

Assuming low correlation between the measurements themselves, the spectral density of the measurement ϕ_τ is then approximated by

$$\begin{aligned} S[\phi_\tau](f) \approx\ & S[\phi](f) \\ & + \left(\frac{\omega}{\omega_{DDS}} \right)^2 4 \sin^2(\pi f \tau) S[\phi_{DDS}](f). \end{aligned} \tag{6}$$

The $4\sin^2(\pi f \tau)$ factor comes directly from the squared Fourier transform of $1 - \mathbf{D}_\tau$. This is commonly referred to as the *delay comparison transfer function*, and frequently shows up in TDI calculations, where it is similar to how the full LISA constellation has no sensitivity at integer multiples of the light travel time [Tinto 2005].

Subtracting the rightmost term of Eq. 3 from the measurement of the delayed signal, and applying the model in Eq. 6 using the spectral density estimations of the DDS tone and of the original generated signal produces the plots shown in Fig. 1. The correction significantly reduces the noise level in the frequency band of interest (mid-mHz) and the model shows good agreement with the measurement of the delayed signal. As a benchmark (BM), we compare these results to the RMS of the design sensitivity of the LISA optical metrology system (OMS) and acceleration noise provided by [**?**], i.e.,

$$S_{BM} = \sqrt{S_{OMS}^2 + 2S_{acc}^2}, \tag{7}$$

where the factor of two represents the two test masses connected by the link.

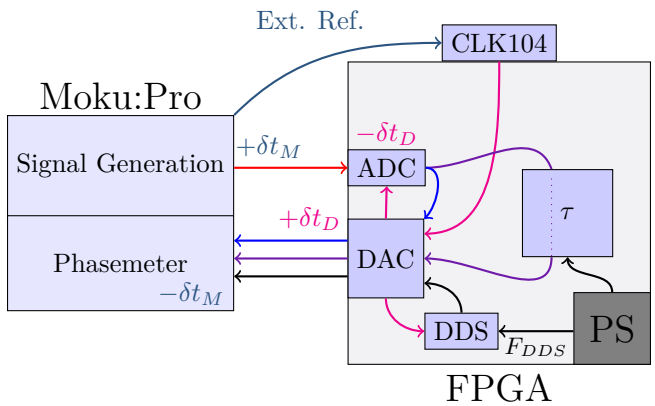

Figure 1: Measurement setup for clock jitter analysis in the delay line, corresponding to Eq. 1. The CLK104 drives the board through one of the DAC tiles (magenta lines), and is fed an external reference by the Moku:Pro to provide a measurement with minimal differential clock noise. Timing jitter terms, δt, enter at interfaces between the digital and analog.