E01-ML01DP5 User Manual

nRF24L01P 2.4GHz 100mW DIP wireless module

Chengdu Ebyte Electronic Technology Co.,Ltd.

Contents

Disclaimer **2**
1. Overview **3**
1.1. Brief Introduction 3
1.2 Features 3
1.3 Application 3
2. Specification and parameter **4**
2.1 Limit parameter 4
2.2 Operating Parameter 4
3. Size and pin definition **5**
4. Basic operation **6**
4.1 Hardware design 6
4.2 Software editing 7
5. Basic application **7**
5.1 Basic circuit diagram 7
6. FAQ **8**
6.1 Communication range is too short 8
6.2 Module is easy to damage 8
6.3 BER(Bit Error Rate) is high 8
7. Production guidance **8**
8. E01 Series **9**
9.Guidance for choosing antenna **9**
9.1 Antenna recommendation 9
10. Packing **10**
10.1 Anti-statistic pallet 10
Revision history **11**
About us ..... **错误！未定义书签。**

Copyright ©2012–2025，Chengdu Ebyte Electronic Technology Co.,Ltd.

Disclaimer

EBYTE reserves all rights to this document and the information contained herein. Products, names, logos and designs described herein may in whole or in part be subject to intellectual property rights. Reproduction, use, modification or disclosure to third parties of this document or any part thereof without the express permission of EBYTE is strictly prohibited.

The information contained herein is provided “as is” and EBYTE assumes no liability for the use of the information. No warranty, either express or implied, is given, including but not limited, with respect to the accuracy, correctness, reliability and fitness for a particular purpose of the information. This document may be revised by EBYTE at any time. For most recent documents, visit www.ebyte.com.

Copyright ©2012–2025，Chengdu Ebyte Electronic Technology Co.,Ltd.

1. Overview

1.1. Brief Introduction

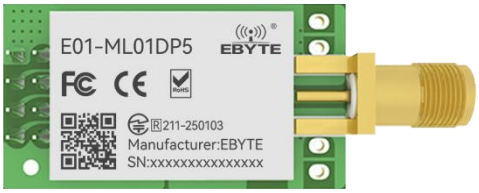

E01-ML01DP5 is a DIP module based on original imported nRF24L01P form Nordic in Norway, operates at 2.4Ghz with 100mW transmitting power.

The RF performance of E01-ML01DP5 and components selection during R&D are all in accordance with industrial grade standards, using industrial-grade high-precision 16MHz crystal oscillator. A power amplifier (PA) and a low noise amplifier (LNA) are built in, so that the maximum transmit power reaches 100mW and the receiving sensitivity is further improved. The products have been greatly improved when there is no PA and LNA in design.

The user needs to use the MCU driver or use a dedicated SPI debugging tool to develop E01-ML01DP5.

1.2 Features

- Communication distance tested is up to 2.5KM;
- Maximum transmission power of 100mW, software multi-level adjustable;
- Support air date rate of 2Mbps, 1Mbps, 250kbps;
- 125 communication channels to meet the needs of multi-point communication, grouping, frequency hopping, etc.
- Connect to the MCU through the SPI interface at a rate of 0 to 10 Mbps.
- Support 2.0V~3.6V power supply, power supply over 3.3V can guarantee the best performance;
- Industrial grade standard design, support -40 ~ 85 °C for working over a long time;
- SMA interface for easy connection of coaxial cable or external antenna;
- Enhanced ShockBurst, fully compatible with NORDIC all nRF24L, nRF24E, nRF24U series.

1.3 Application

- Wearable device;
- Smart home and industrial sensors;
- Security system, positioning system;
- Wireless remote control, drone;
- Wireless game remote control;
- Healthcare products;
- Wireless voice, wireless headset;
- Automotive industry applications.

Copyright ©2012–2025，Chengdu Ebyte Electronic Technology Co.,Ltd.

2. Specification and parameter

2.1 Limit parameter

Main parameter	Performance		Remark
	Min.	Max.	
Power supply（V）	0	3.6	Voltage over 3.6V will cause permanent damage to module
Blocking power（dBm）	-	10	Chances of burn is slim when modules are used in short distance
Operating temperature（℃）	-40	85	

2.2 Operating Parameter

Main parameter		Performance			Remarks
		Min.	Typ.	Max.	
Operating voltage（V）		2.0	3.3	3.6	≥3.3V ensures output power
Communication level（V）			3.3		For 5V TTL, it may be at risk of burning down
Operating temperature（℃）		-40	-	85	Industrial design
Operating frequency（GHz）		2.4	-	2.525	Support ISM band
Power consumption	TX current（mA）		130		Instant power consumption
	RX current（mA）		20		
	Sleep current （μA）		1.0		Software is shut down
Max Tx power（dBm）		19.7	20	20.2	
Receiving sensitivity（dBm）		-96.5	-96	-97.5	Air data rate is 250kbps
Air data rate（bps）		250k	-	2M	Controlled via user’s programming

Main parameter	Description	Remark
Distance for reference	2500m	Test condition：clear and open area, antenna gain: 5dBi，antenna height: 2.5m，air data rate: 250kbps
FIFO	32Byte	Max length transmitted each time
Crystal frequency	16MHz	
Modulation	GFSK	
Package	DIP	
Connector	2.54mm Pin	
Communication interface	SPI	0-10Mbps
Size	18 * 33.4mm	Without SMA
Antenna	SMA-K	50ohm impedance

Copyright ©2012–2025，Chengdu Ebyte Electronic Technology Co.,Ltd.

3. Size and pin definition

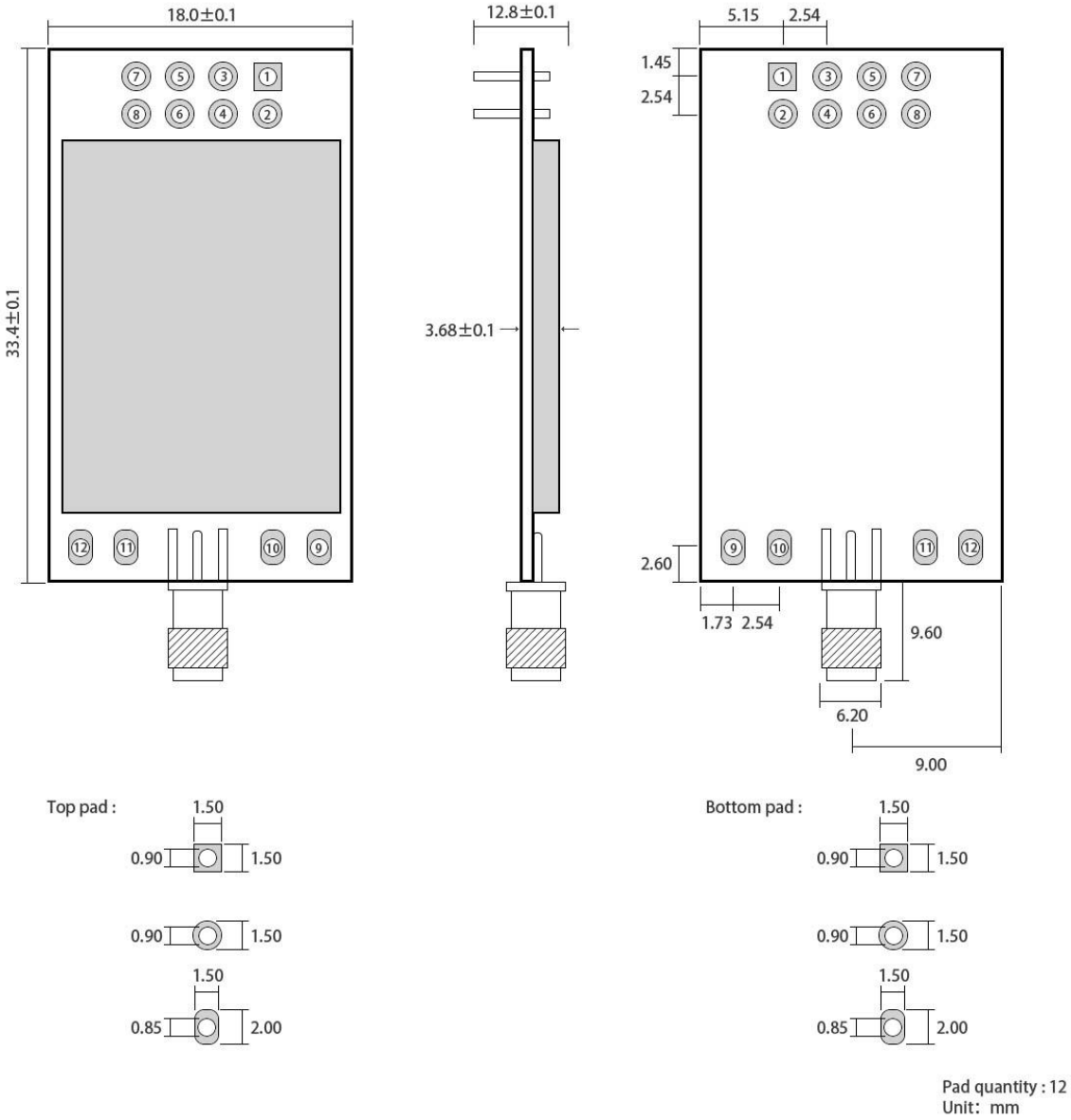

Pin No.	Pin item	Pin direction	Pin application
1	GND		Ground
2	VCC		Power supply must be 2.0~ 3.6V
3	CE	Input	Chip Enable
4	CSN	Input	SPI Chip select
5	SCK	Input	SPI clock
6	MOSI	Input	SPI master output slave input
7	MISO	Output	SPI master input slave output
8	IRQ	Output	Interrupt request.

Copyright ©2012–2025，Chengdu Ebyte Electronic Technology Co.,Ltd.

4. Basic operation

4.1 Hardware design

5 It is recommended to use a DC stabilized power supply. The power supply ripple factor is as small as possible, and the module needs to be reliably grounded;

6 Please pay attention to the correct connection of the positive and negative poles of the power supply. Reverse connection may cause permanent damage to the module;

7 Please check the power supply to ensure it is within the recommended voltage otherwise when it exceeds the maximum value the module will be permanently damaged;

8 Please check the stability of the power supply, the voltage cannot be fluctuated frequently;

9 When designing the power supply circuit for the module, it is often recommended to reserve more than 30% of the margin, so the whole machine is beneficial for long-term stable operation;

10 The module should be as far away as possible from the power supply, transformers, high-frequency wiring and other parts with large electromagnetic interference;

11 High-frequency digital routing, high-frequency analog routing, and power routing must be avoided under the module. If it is necessary to pass through the module, assume that the module is soldered to the Top Layer, and the copper is spread on the Top Layer of the module contact part(well grounded), it must be close to the digital part of the module and routed in the Bottom Layer;

12 Assuming the module is soldered or placed over the Top Layer, it is wrong to randomly route over the Bottom Layer or other layers, which will affect the module's spurs and receiving sensitivity to varying degrees;

13 It is assumed that there are devices with large electromagnetic interference around the module that will greatly affect the performance. It is recommended to keep them away from the module according to the strength of the interference. If necessary, appropriate isolation and shielding can be done;

14 Assume that there are traces with large electromagnetic interference (high-frequency digital, high-frequency analog, power traces) around the module that will greatly affect the performance of the module. It is recommended to stay away from the module according to the strength of the interference. If necessary, appropriate isolation and shielding can be done.

15 If the communication line uses a 5V level, a 1k-5.1k resistor must be connected in series (not recommended, there is still a risk of damage);

16 Try to stay away from some physical layers such as TTL protocol at 2.4GHz , for example: USB3.0;

17 The mounting structure of antenna has a great influence on the performance of the module. It is necessary to ensure that the antenna is exposed, preferably vertically upward. When the module is mounted inside the case, use a good antenna extension cable to extend the antenna to the outside;

18 The antenna must not be installed inside the metal case, which will cause the transmission distance to be greatly weakened.

Copyright ©2012–2025，Chengdu Ebyte Electronic Technology Co.,Ltd.

4.2 Software editing

- This module is nRF24L01+PA+LNA, the drive mode is exactly equivalent to nRF24L01P, the user can operate according to the nRF24L01P manual (Please see nRF24L01P manual for more details).
- As interrupt pin for IRQ, it can be used to wake-up MCU and achieve fast response;
- But the user can get the interrupt status through SPI (not recommended, it is not conducive to the overall power consumption, and with low efficiency）.
- CE pin can be high level for long-term, but it needs to set as POWER DOWN mode when the module write registers, and it is recommended that CE is controlled by MCU pin.
- Make sure the CE pin connect to LNA enable pin , when CE equal to 1, LNA is turned on, when CE to 0, LNA is turned off. This operation is perfectly matched with the transceiver mode of nRF24L01; that is to say, users do not have to care about the LNA operation
- If the automatic response is needed, the CE pin must keep high level when transmitting, instead of keeping high level time just more than 10us like the datasheet mentioned.The operation we recommended is: when CE equal to 1, the module begin sending, after sending all, then make the CE equal to 0, instead of making the CE equal to 0 after 10 us.The reason is: the module turns into receiving mode immediately after sending L01P,If CE equal to 0,it means LNA closed, will not be beneficial to the receiving senility

5. Basic application

5.1 Basic circuit diagram

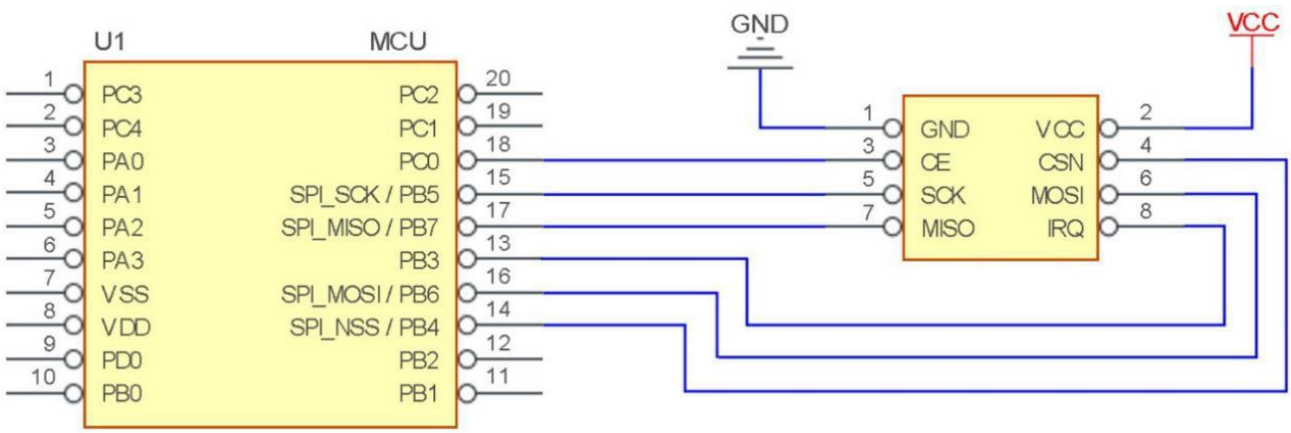

6. FAQ

6.1 Communication range is too short

- The communication distance will be affected when obstacle exists.
- Data lose rate will be affected by temperature, humidity and co-channel interference.
- The ground will absorb and reflect wireless radio wave, so the performance will be poor when testing near ground.
- Sea water has great ability in absorbing wireless radio wave, so performance will be poor when testing near the sea.
- The signal will be affected when the antenna is near metal object or put in a metal case.
- Power register was set incorrectly, air data rate is set as too high (the higher the air data rate, the shorter the distance).
- The power supply low voltage under room temperature is lower than 2.5V, the lower the voltage, the lower the transmitting power.
- Due to antenna quality or poor matching between antenna and module.

6.2 Module is easy to damage

- Please check the power supply source, ensure it is 2.0V~3.6V, voltage higher than 3.6V will damage the module.
- Please check the stability of power source, the voltage cannot fluctuate too much.
- Please make sure antistatic measure are taken when installing and using, high frequency devices have electrostatic susceptibility.
- Please ensure the humidity is within limited range, some parts are sensitive to humidity.
- Please avoid using modules under too high or too low temperature.

6.3 BER(Bit Error Rate) is high

- There are co-channel signal interference nearby, please be away from interference sources or modify frequency and channel to avoid interference;
- Poor power supply may cause messy code. Make sure that the power supply is reliable.
- The extension line and feeder quality are poor or too long, so the bit error rate is high;

7. Production guidance

This module is a DIP type module, the workers must work according to the static discharge operation specifications while welding. This module is a static-sensitive product, it may cause permanent damages if the module is not welded

Copyright ©2012–2025，Chengdu Ebyte Electronic Technology Co.,Ltd.

according to the specifications.

8. E01 Series

Model No.	IC	Frequency	Tx power	Test distance	Package	Antenna
		Hz	dBm	km		
E01-ML01S	nRF24L01P	2.4G	0	0.1	SMD	PCB
E01-ML01D	nRF24L01P	2.4G	0	0.1	DIP	PCB
E01-ML01IPX	nRF24L01P	2.4G	0	0.2	SMD	IPEX
E01-ML01DP4	nRF24L01P	2.4G	20	1.8	DIP	PCB
E01-ML01DP5	nRF24L01P	2.4G	20	2.5	DIP	SMA-K
E01-ML01SP2	nRF24L01P	2.4G	20	1.8	SMD	PCB/IPEX
E01-ML01SP4	nRF24L01P	2.4G	20	2	SMD	IPEX
E01-2G4M27D	nRF24L01P	2.4G	27	5	DIP	SMA-K

9.Guidance for choosing antenna

9.1 Antenna recommendation

Antenna plays important role in the communication process. Good antenna can largely improve the communication system. Therefore, we recommend some antennas with excellent performance and reasonable price.

Model	Type	Frequency Hz	Interface	Gain dBi	siza	Fender	Feature
TX2400-NP-5010	FPC	2.4G	IPEX	2	50*10mm	-	FPC
TX2400-XP-150	Sucker	2.4G	SMA-J	3.5	15cm	150cm	High gain
TX2400-JK-20	Whip	2.4G	SMA-J	3	200mm	-	Omnidirectional antenna
TX2400-JK-11	Whip	2.4G	SMA-J	2.5	110mm	-	Omnidirectional antenna
TX2400-JZ-3	Whip	2.4G	SMA-J	2	30mm	-	Omnidirectional antenna

Copyright ©2012–2025，Chengdu Ebyte Electronic Technology Co.,Ltd.

10. Packing

10.1 Anti-statistic pallet

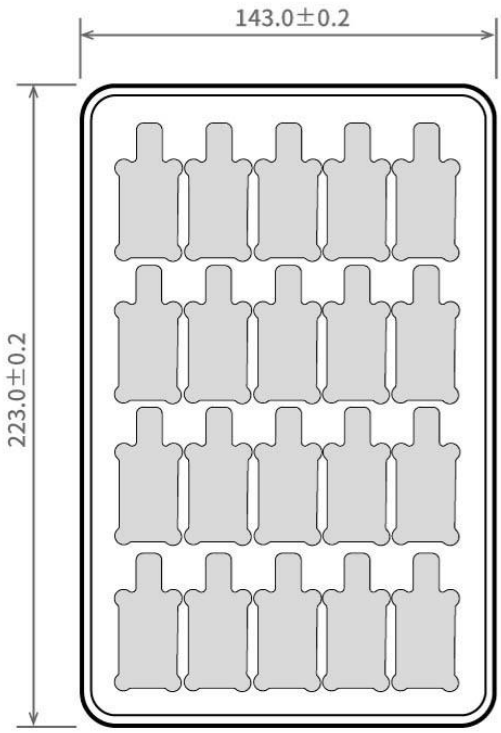

Unit: mm
Each Layer: 20 pcs
Each Package: 5 layers

Revision history

Version	Date	Description	Issued by
1.00	2017/11/15	Original version	huaa
1.10	2018/5/22	Content updated	huaa
1.20	2018/9/6	Model No. split	huaa
1.30	2019/12/21	Circuit diagram modification	Linson
1.50	2024-12-26	Delete the authentication description	Lei
1.60	2025-3-13	Add product picture authentication logo	LAU
1.70	2025-12-4	Add product picture authentication logo	Hao

About us

Technical support: support@cdebyte.com

Documents and RF Setting download link: https://www.cdebyte.com

Thank you for using Ebyte products! Please contact us with any questions or suggestions: info@cdebyte.com

---

Phone: +86 028-61399028

Web: https://www.cdebyte.com

Address: B5 Mould Park, 199# Xiqu Ave, High-tech District, Sichuan, China

Chengdu Ebyte Electronic Technology Co.,Ltd.

Copyright ©2012–2025，Chengdu Ebyte Electronic Technology Co.,Ltd.