18650-2P Battery Data Sheet

Customer name: Yufu Lighting

product type	Battery model	Cell type	Cell model	specifications
lithium cell	18650-2P	lithium cell	18650	3.7V/3000mAh

Manufacturer: Dongguan Walter Tai Battery Technology Co., LTD

	lay down	examine and verify	ratify
	刘小快	莫善晚	武新记

Customer confirmation:

Confirm by Project Manager	Structural confirmation	Electronic confirmation	Quality confirmation

Prepare / modify the CV

version number	Preparation / modification	description	availability date
A		initial issue	2022.05.07

1. Scope of application:

This specification is applicable to 18650-2P battery products.

2. Citation standards:

GB / T 18287- -2013 General Code for Li-ion batteries for cellular phones, PRC.

3. Main technical parameters of the battery:

order number	content	parameter		remarks
1	nominal voltage	3.7V		
2	nominal capacity	3000mAh		Capacity discharged at 0.2C to cut-off voltage after full charge.
3	Charging limit voltage	4.2V		
4	internal resistance	≦120m Ω		
5	Charging method	Constant current / constant pressure mode C.C/C.V.		Constant flow / constant pressure
6	charge	Standard charging current: 600mA		0.2C
		Maximum charging current: 3000mA		1C
7	charging interval	Standard charging	≤8h	
		quick charge	≤3.5h	
8	Standard discharge current	600mA		0.2C Discharge
9	Maximum discharge current	4000mA		1.33C discharge current
10	Discharge cut-off voltage	2.5V±0.1V		
11	Output short circuit protection	Cancel the short-circuit load recovery after protection		
12	working temperature	When charging	0~50℃	
		When discharge	-10~60℃	
13	storage temperature	One month: -10~60℃		
		3 months: -10~55℃		
		Recommended storage: 15~35℃		
14	ID resistance	not have		
15	cycle life	Admito 300 times		
16	Factory voltage	3.85V ~4.0V		
17	Battery size			See drawings

4. Battery schematic diagram

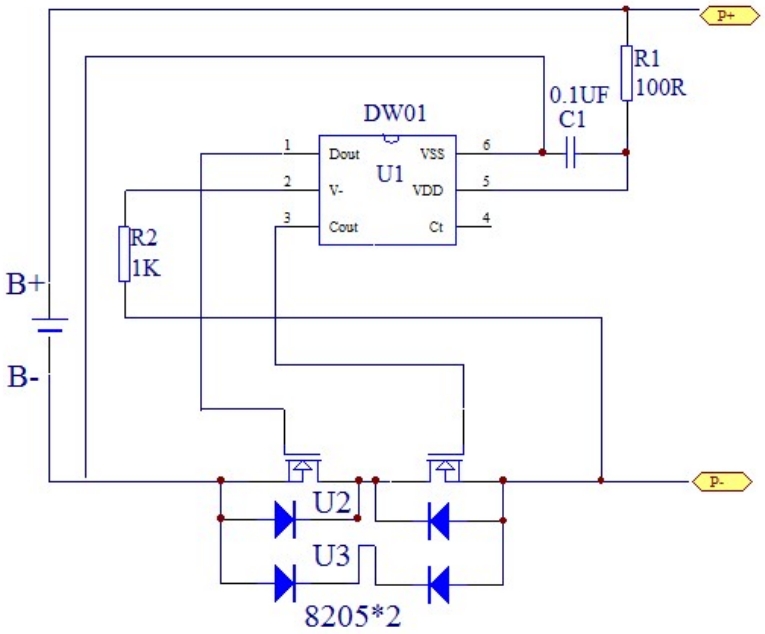

5. Battery Structure Diagram (size: mm)

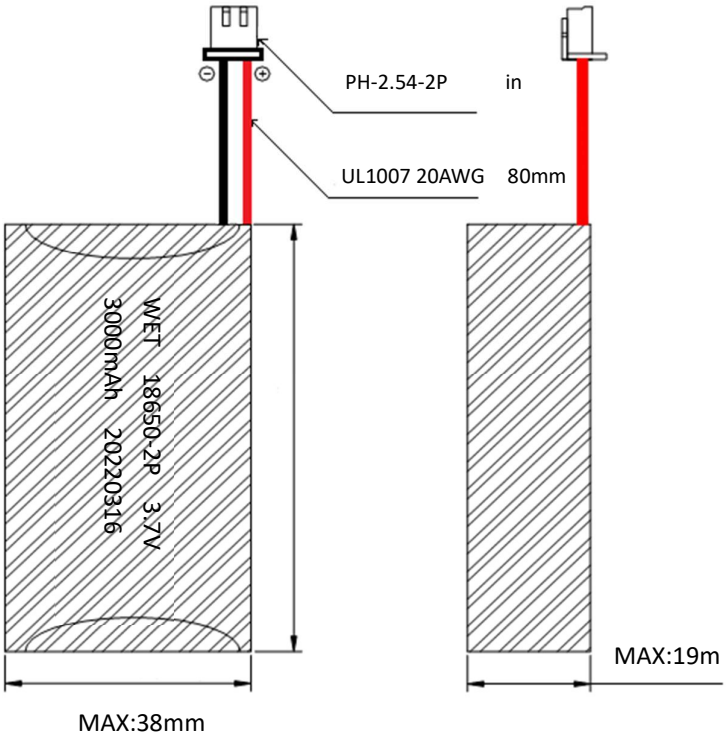

6. Battery performance test standard requirements

6.1 Test the environmental conditions

Unless otherwise specified, the tests in this specification shall be conducted under the standard atmospheric conditions tested:

temperature:25℃±2℃

Relative humidity: 45%~75%

Atmospheric pressure intensity: 86Kpa ~106Kpa

6.2 Requirements for measuring instruments and equipment

6.2.1 The instrument accuracy of measuring voltage shall not be less than ± 0.5%, and the internal resistance shall not be less than 10K / V.

6.2.2 The instrument accuracy of measuring current shall not be less than ± 0.5%.

6.2.3 The instrument accuracy of the measurement time shall not be less than ± 0.1%.

6.2.4 The instrument accuracy of measuring temperature shall not be less than ± 0.5℃.

6.2.5 The current of the constant current source is constant and adjustable, and its current change should be within the range of 1% of ± during charging or discharge.

6.2.6 The voltage of the constant voltage source is adjustable, and the voltage change range is ± 0.1% during the constant voltage charging process.

6.2.7 The accuracy of the dimension meter is not less than 0.02mm, and the range is 200mm.

6.3 Routine performance test

group indication	inspecting item	requirement	test method	remarks
1	Standard charging	Charging time is 8 hours	After charging at 0.2C5A constant current to 4.2V at an ambient temperature of 25 ± 2℃, the battery is changed to constant voltage charging until the charging current 0.02C5A stops charging.	
2	quick charge	Charging time is 3.5 hours	After charging to 4.2V at an ambient temperature of 25 ± 2℃, the battery is changed to constant voltage charging until the charging current 0.02C5A stops charging.	
3	Standard discharge	The discharge time was 300min	After standard full charge, after shelved for 1h, constant discharge with 0.2C5A to the voltage of 2.7V.	
4	Fast discharge	The discharge time was 54min	After quick full charge, after shelved for 1h, constant discharge with 1.0C5A to voltage of 2.7V.	
5	internal resistance	≤120m Ω	The AC 1KHZ detection method was used	
6	open circuit voltage	3.85～3.95V	Use a multimeter to test the positive and negative extreme child hardware contact pieces	
7	Charge retention capacity	The discharge time was 255min	After the standard battery charging, the battery is discharged up to voltage at 0.2C5A after 28 days at the ambient temperature of 25 ± 2℃, then charged and discharged to up voltage at 25 ± 2℃.	

8	cycle life	Admito 300 times	At an ambient temperature of 25 ± 2℃, the battery is charged at 1.0C 5A to 4.2V, changed to constant voltage until the charging current 0.02C5A stops charging, hold for 1h, and then discharged at 1.0C 5A to voltage 3.0V. After the discharge ends, stand for 1h for a cycle of 300 times.	
9	Free fall	The battery should all leak and do not break No fire or no explosion Voltage is not less than 3.8V	After the standard charging, drop the battery freely on the cement floor from the height (lowest height) to the 1m, and once from the positive and negative direction of X, Y and Z (six directions).After the test, check the battery open circuit voltage and make a visual appearance.	

6.4 Safety performance

group indication	inspecting item	requirement	test method	remarks
10	Overcharging and protection performance	The battery should not catch fire, explosion, smoke or leak	After the battery is fully charged, the power supply voltage is set at 2 times the nominal voltage, the current is set at 2C 5A external current, and the battery is loaded with a constant current and constant voltage source for 7h.	
11	Overdischarge protection performance	The battery should not catch fire, explosion, smoke or leak	After the battery discharges at 0.2C5A to the termination voltage at an ambient temperature of 25 ± 2℃, a 30 Ω external load resistance is discharged for 7h.	
12	Short circuit protection performance	The battery should not catch fire or explode	After the battery is fully charged, short-circuit the positive and negative electrodes with an 80mΩ ± 20mΩ resistance for 1h.	
13	Heavy shock	No fire, no explosion, and the battery is allowed to deform	Place the standard charged battery on a plane and place a 15.8mm ± 0.2mm steel column in the battery center (vertical axis parallel to the plane, allowing a 9.1kg±0.1kg hammer from 610 ± 25mm to the steel column above the battery center.	

6.5 Environmental adaptability

group indication	inspecting item	requirement	test method	remarks
14	High temperature discharge performance	The discharge time shall not be less than 5h. The appearance of the battery should be no fire, no leakage, no explosion	After the battery is quickly charged, place the battery in a high temperature tank of (55 ± 2) ℃ for 2h, and then discharge at 0.2C5A current to the termination voltage.	
15	Low temperature discharge performance	The discharge time shall not be less than 3.5H, and the battery appearance shall be free from deformation and explosion	In ambient (25 ± 2) ℃ conditions, after the battery is quickly charged, put in a-10 ± 2℃ cold tank at 4H, and then discharge at 0.2C current to the termination voltage.	
16	Constant humidity and heat performance	The discharge time shall not be less than 300min; the battery appearance shall be without deformation, burst, rust, smoke, fire and explosion.	After the standard charging, the battery was put in a constant temperature and humidity box of (40 ± 2) ℃ and relative humidity of (90%~95%) for 48h, the battery was removed and put at the ambient temperature (25 ± 2) ℃ for 2h, the battery appearance was visually inspected, and then discharged at 0.2C 5A current to the termination voltage.	
17	vibrate	The battery appearance shall be without obvious deformation, corrosion, smoke or explosion, and the battery voltage shall not be less than 3.8V.	The battery, at an ambient temperature of 25℃ ± 2℃, Charge from 0.2C 5A to 4.2V to constant voltage charging, Until the charge current is less than or equal to 0.02C 5A, Secure the battery to the vibration countertops, Scan frequency vibration at 10Hz ~30Hz cycle from X, Y and Z for 30 minutes, Sweep rate is 1oct / min: vibration frequency: 10Hz ~30Hz displacement amplitude (single amplitude): 0.38mm; vibration frequency: 30Hz ~55Hz displacement amplitude (single amplitude): 0.19mm.	

7. Operating instructions and safety procedures:

7.1 Recommended use items

7.1.1 For the battery, read the instructions and surface identification carefully before using the battery.

7.1.2 Please use the battery in a normal indoor environment, temperature: (25 ± 5) ℃, relative humidity: 65 ± 20%

7.1.3 In the process of use, should be away from heat source, high pressure, avoid children playing with the battery, do not hit the battery.

7.1.4 This battery can only be charged using a matching charger, do not put the battery in the charger for more than 24 hours.

7.1.5 Do not short circuit the positive and negative electrodes of the battery, do not disassemble the battery by yourself, and do not let the battery be put in the damp place, so as to avoid danger.

7.1.6 When not used for a long time, please store the battery intact and put the battery in a half-charged state.Please wrap the battery in non-conductive material to avoid direct contact with the metal and cause battery damage. Keep the battery in a cool and dry place.

7.1.7 Please dispose of the waste batteries safely and do not put them in the fire or water.

7.2 Hazard warning

7.2.1 Disassemble or disassemble the battery

The battery has a protection mechanism and a protection circuit to avoid danger.Inappropriate disassembly will damage the protection function and will cause the battery to heat up, smoke, deform or burn.

7.2.2 Never short-circuit the battery

Do not connect the positive and negative electrodes of the battery with metal, and do not store and move the battery together with the metal sheet.If the battery is short-circuited, there will be a large current flowing, which will damage the battery, causing it to heat, smoke, deform or burn.

7.2.3 Heating and burn batteries

Heating and incineration of the battery will cause the dissolution of the battery isolate, loss of safety function or electrolyte combustion, overheating will make the battery heat, smoke, deform or burn.

7.2.4 Avoid using batteries near the heat source

Do not use the battery in a fire source, near the oven or over 80℃, overheating will cause a short circuit inside the battery, make the battery heat, smoke, deformation or burn.

7.2.5 Do not wet the battery, more can not put the battery into the water, otherwise it will cause the battery internal protection circuit and function loss and abnormal chemical reaction,

the battery may heat, smoke, deformation or burn.

7.2.6 Avoid charging near the fire source or under direct sunlight, otherwise it will cause the battery internal protection circuit and function loss and abnormal chemical reactions, the battery may heat, smoke, deformation or burn.

7.2.7 Use a non-special charger to charge the battery, which is dangerous.

Charging under abnormal conditions can cause the loss of function of the battery internal protection circuit and abnormal chemical reaction, the battery may heat, smoke, deformation or burn.

7.2.8 No battery is prohibited

Do not chisel into the battery with metal, hammer or hit the battery or other methods to destroy the battery, otherwise it will cause the battery heat, smoke, deformation or combustion, and even dangerous.

7.2.9 Do not charge the battery directly on the power outlet or on the car cigarette lighter High pressure, high current will pass over the battery and cause it to damage, or make the battery heat, smoke, deformation or burn.

7.2.10 Do not use batteries for other devices

Improper use can damage battery performance, reduce life, and even heat, smoke, deform or burn.

7.2.11 Do not touch the leaking battery directly

Leakage of electrolyte will cause skin discomfort, in case of electrolyte into the eyes, rinse with water as soon as possible, do not rub the eyes, and quickly send to the hospital for treatment.

7.3 Warning

7.3.1 Keep the battery away from the child to avoid children biting or swallowing the battery. If you swallow the battery, you should be sent to the hospital quickly.

7.3.2 Do not put it on the charger for a long time

If the charger is still charging for a long time after the normal charging time, the charging should be stopped. Improper charging may make the battery heat up, smoke deformation or burn.

7.3.3 Do not be placed in a microwave oven or other pressure vessel

Instant heating or structural leakage (or odor), let the battery away from the phone or charger and discard.Using abnormal batteries, they can heat, smoke, deform, or burn.

8. Other matters:

The above can be used as the agreed framework of the supply and demand parties for the battery product performance and inspection rules.If there is no new written agreement or notice of change, follow this action.

9. Battery label

not have

10. Battery Main Bill of Materials

order number	name of material	specifications and models	dosage	remarks
1	The cell	18650/1500mAh	2	
2	fender apron	HD-L3536	1	
3	Highland barley paper	0.2 Thick, / 8 type	3	
4	Blue PVC cannula	0.08*66	1	
5	Terminal line	UL1007 20AWG 2.54 terminal	1	Red, black
6	Highland barley paper	64*7.5*0.2/mm	1	

11. Package schematic diagram

manner of packing			
P / N		product name	Lithium-ion battery
product model	18650-2P Battery	packing materials	Battery + plastic suction box + carton

1.电池装入 PE 胶袋

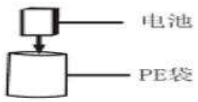

2.装好 PE 袋的电池装入盒子里

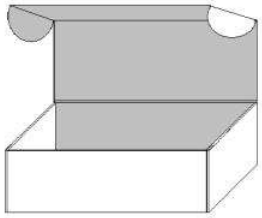

3.装好电池的盒子装在箱子里

4.封箱贴标识卡

appendix

1. Performance parameters of the protection board

Item	Symbol	Content	Criterion
project	symbol	detail	standard
Over charge Protection Overcharge protection	V DET1	Over charge detection voltage	4.3±0.05V
		Overcharge detection voltage	
	t V DET1	Over charge detection delay time	77～143ms
		Overcharge detection delay time	
	V REL1	Over charge release voltage	4.1±0.05V
		Overcharge and release voltage	
Over discharge Protection Over-release protection	V DET2	Over discharge detection voltage	2.5±0.1V
		Overdischarge detection voltage	
	t V DET2	Over discharge detection delay time	38.5～71.5ms
		Overdischarge detection delay time	
	V REL2	Over charge release voltage	2.9±0.1V
		Overdischarge release voltage	
Over current protection overcurrent protection	V DET3	Over current detection voltage	0.15±0.03V
		Overcurrent detection voltage	
	I DP	Over current detection current	4～8A
		Overcurrent protection current	
	t V DET3	detection delay time	4.9～9.1ms
		Detect the delay time	
		Release condition	Cut load
		Protection discharge conditions	Disconnect the load
Short protection short-circuit protection		Detection condition	Exterior short circuit
		Protection conditions	Short circuit for external circuit
	T SHORT	detection delay time	200～600us
		Detect the delay time	
		Release condition	Cut short circuit
		Protection discharge conditions	Disconnect the short circuit
Interior resistance internal resistance	R DS	Main loop electrify resistance	Vc=4.5V ;R DS ≤60m Ω
		Main circuit through-state resistance	
Current consumption Consumption of current	I DD	Current consume in normal operation	0.3μ A Type 7.0μ A Max
		Internal circuit consumption during operation	

2. Schematic diagram of the protection board

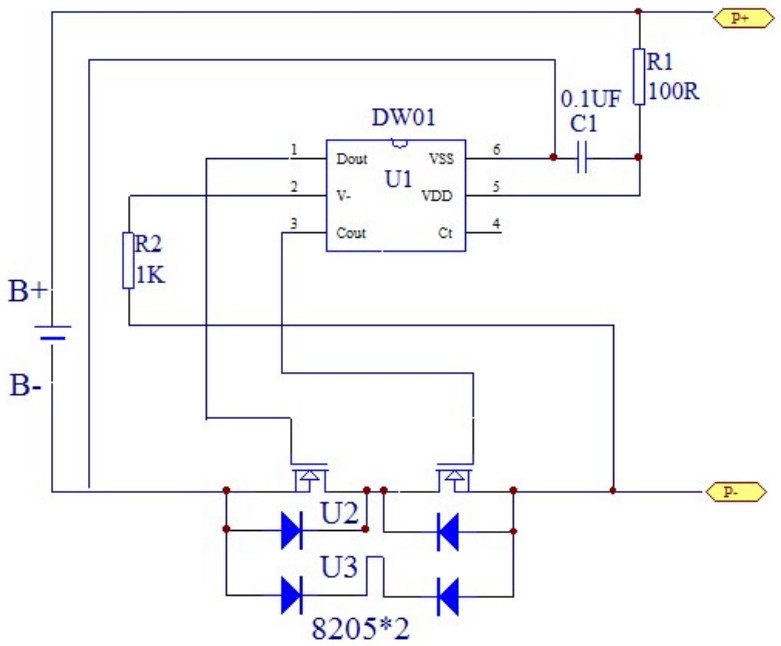

3. Bill of material of the protective board

NO.	Location	Part name	Specification	Pack type	Q ’ ty	Maker/Remark
	Component number	Component name	Component specifications	Packaging type	quantity	Manufacturer / Remarks
1	U1	Battery protection IC	DW01	SOT-23-6	1	
2	U2 U3	Silicon MOSFET	8205	TSSOP-8	2	
3	R1	Resistance	SMD 100R ±5%	0603	1	
4	R2	Resistance	SMD 1K ±5%	0402	1	
5	R3	Resistance	SMD ±1%	0402	0	
6	C1	Capacitance	SMD 0.1 μ F	0603	1	
7	PCB	Print circuit board	28*3.7*0.6mm	±0.1mm	1	
9	B+	Nickel sheet	8*3*0.3mm	±0.05mm	1	
10	B-	Nickel sheet	8*3*0.3mm	±0.05mm	1	