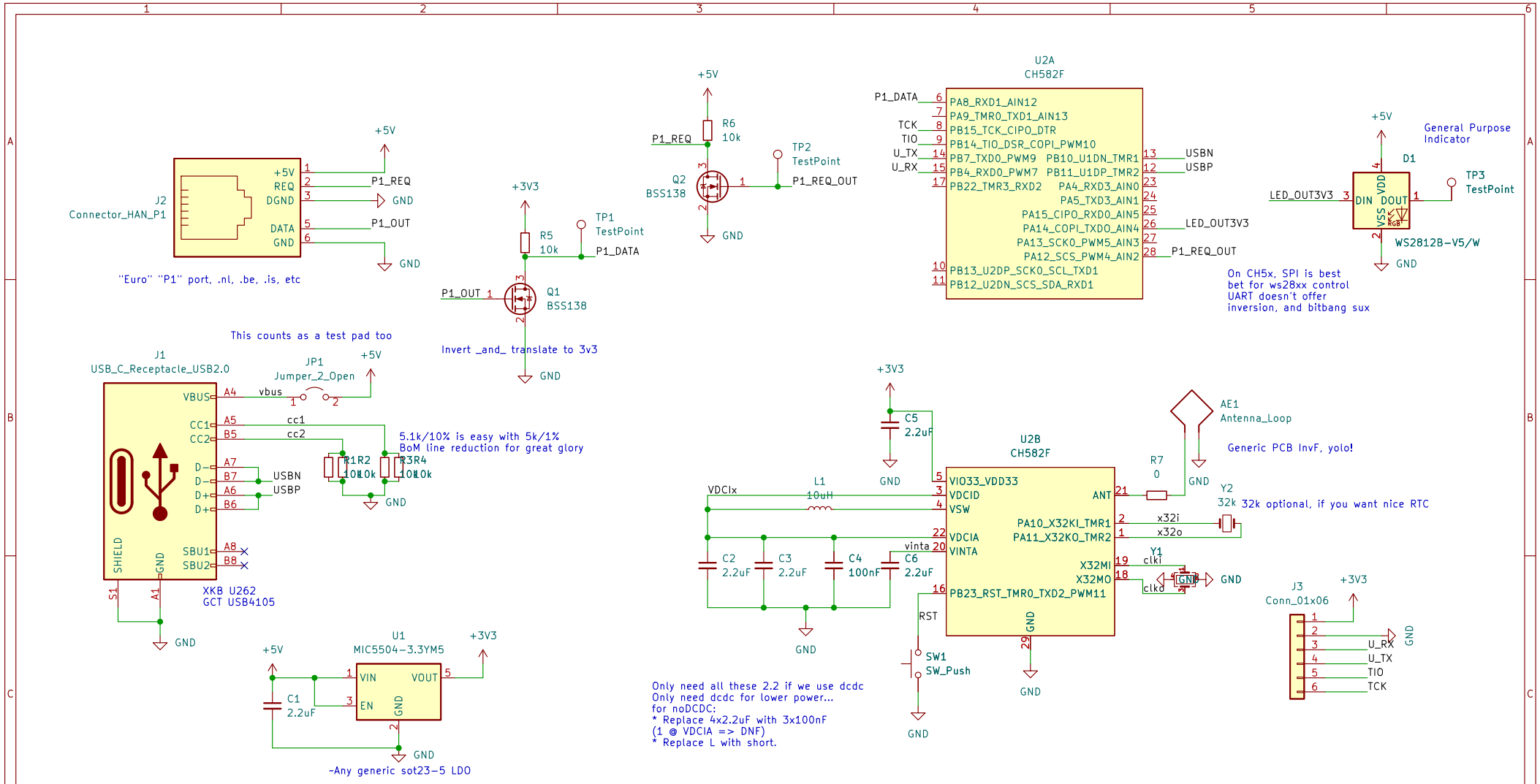

false.ekta.is
Karl Palsson
Ekta Labs

Sheet: /
File: veittur-p1-ble.kicad_sch

Title: Euro P1/HAN to BLE dongle

Size: A4	Date: 2022-10-07	**Rev: 2022-10**
KiCad E.D.A. kicad 6.0.8-1.fc36		Id: 1/1