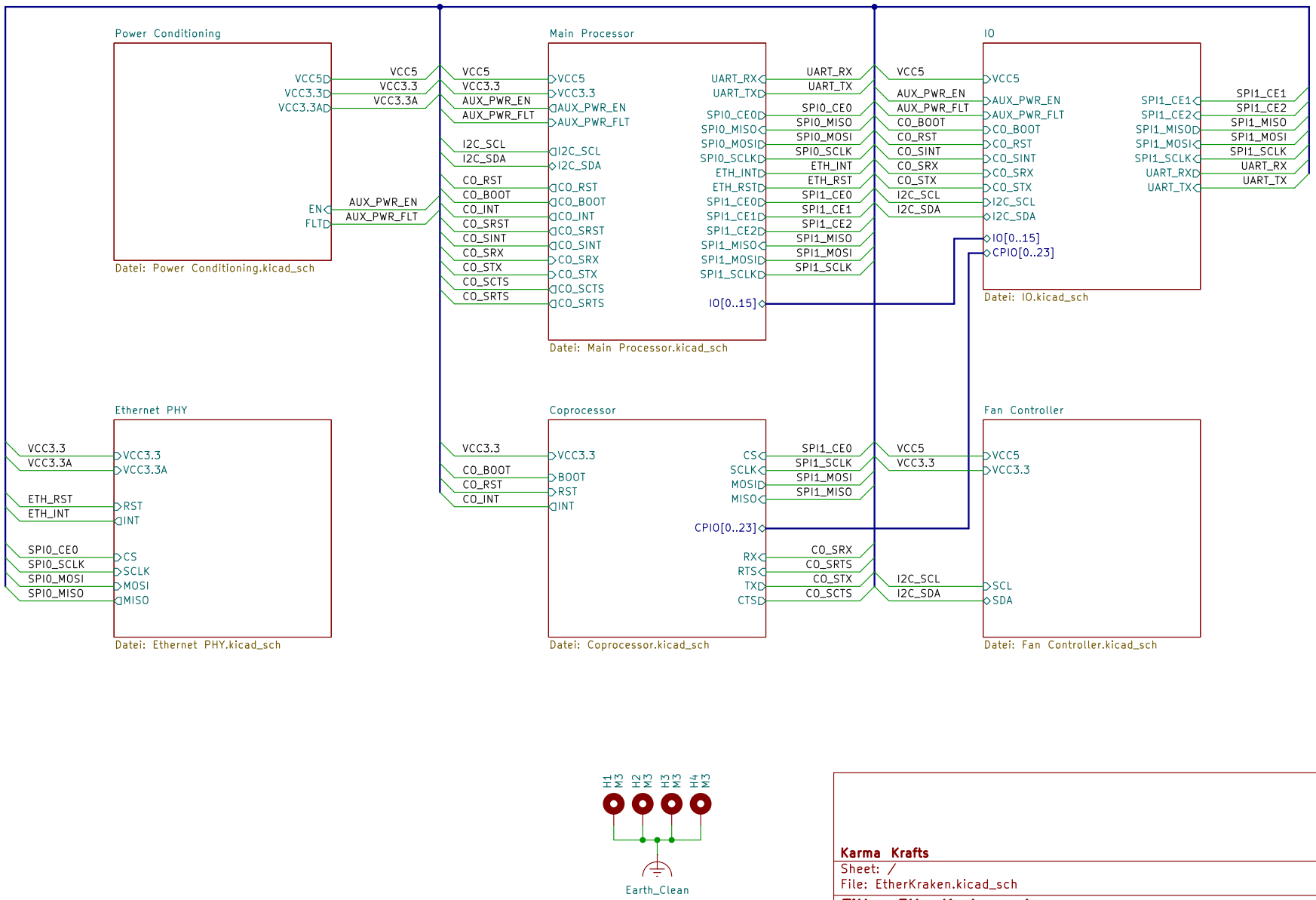

Karma Krafts

Sheet: /

File: EtherKraken.kicad_sch

Title: EtherKraken v1

Size: A4	Date: 2026-04-24	**Rev: C**
KiCad E.D.A. 10.99.0-unknown		Id: 1/7

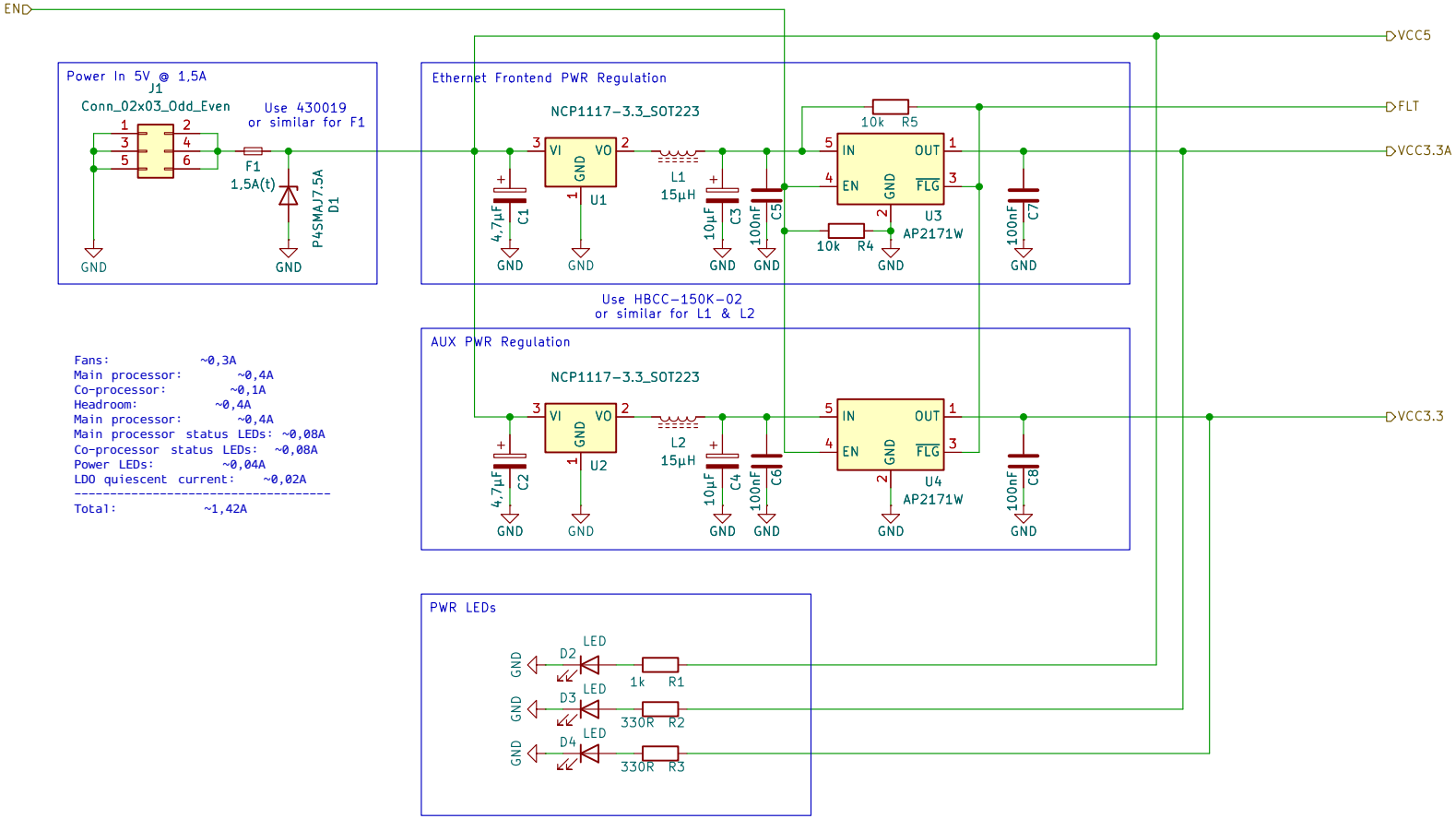

Fans: ~0,3A
Main processor: ~0,4A
Co-processor: ~0,1A
Headroom: ~0,4A
Main processor: ~0,4A
Main processor status LEDs: ~0,08A
Co-processor status LEDs: ~0,08A
Power LEDs: ~0,04A
LDO quiescent current: ~0,02A

Total: ~1,42A

Karma Krafts

Sheet: /Power Conditioning/
File: Power Conditioning.kicad_sch

Title: EtherKraken v1

Size: A4	Date: 2026-04-24	**Rev: C**
KiCad E.D.A. 10.99.0-unknown		Id: 2/7

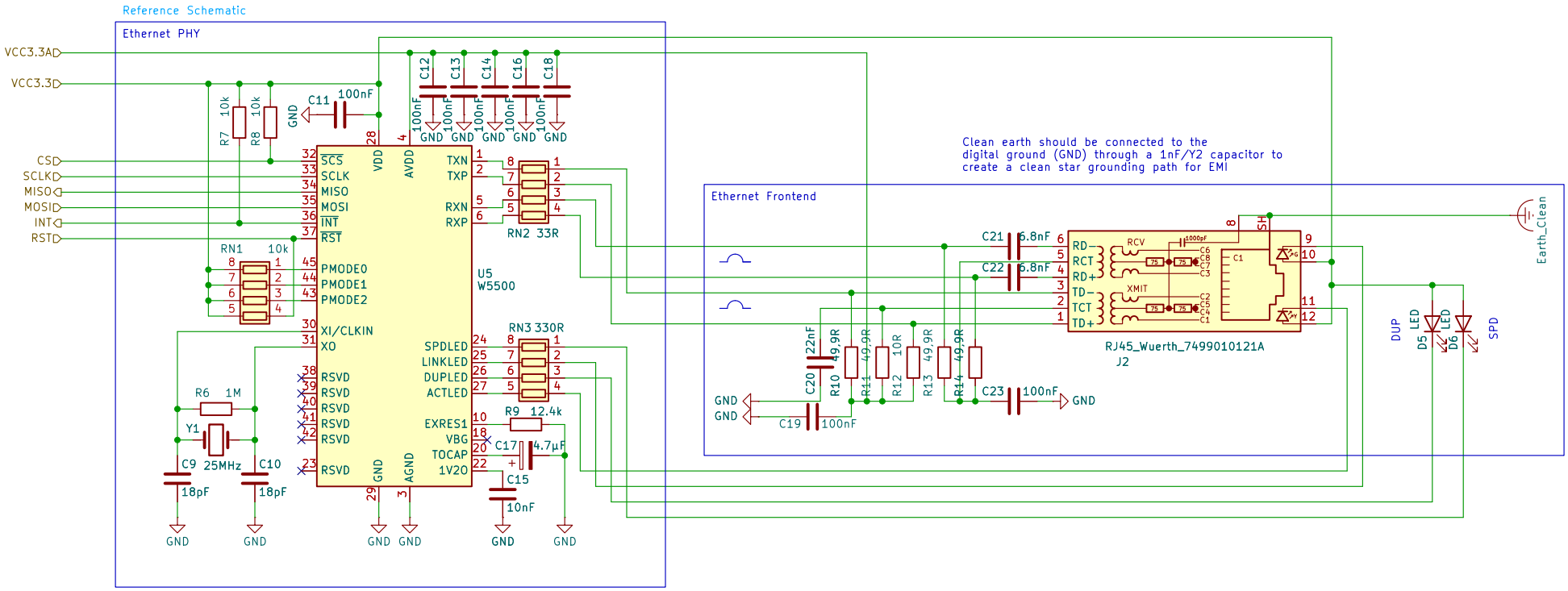

Karma Krafts

Sheet: /Ethernet PHY/

File: Ethernet PHY.kicad_sch

Title: EtherKraken v1

Size: A4	Date: 2026-04-24	Rev: C
KiCad E.D.A. 10.99.0-unknown		Id: 3/7

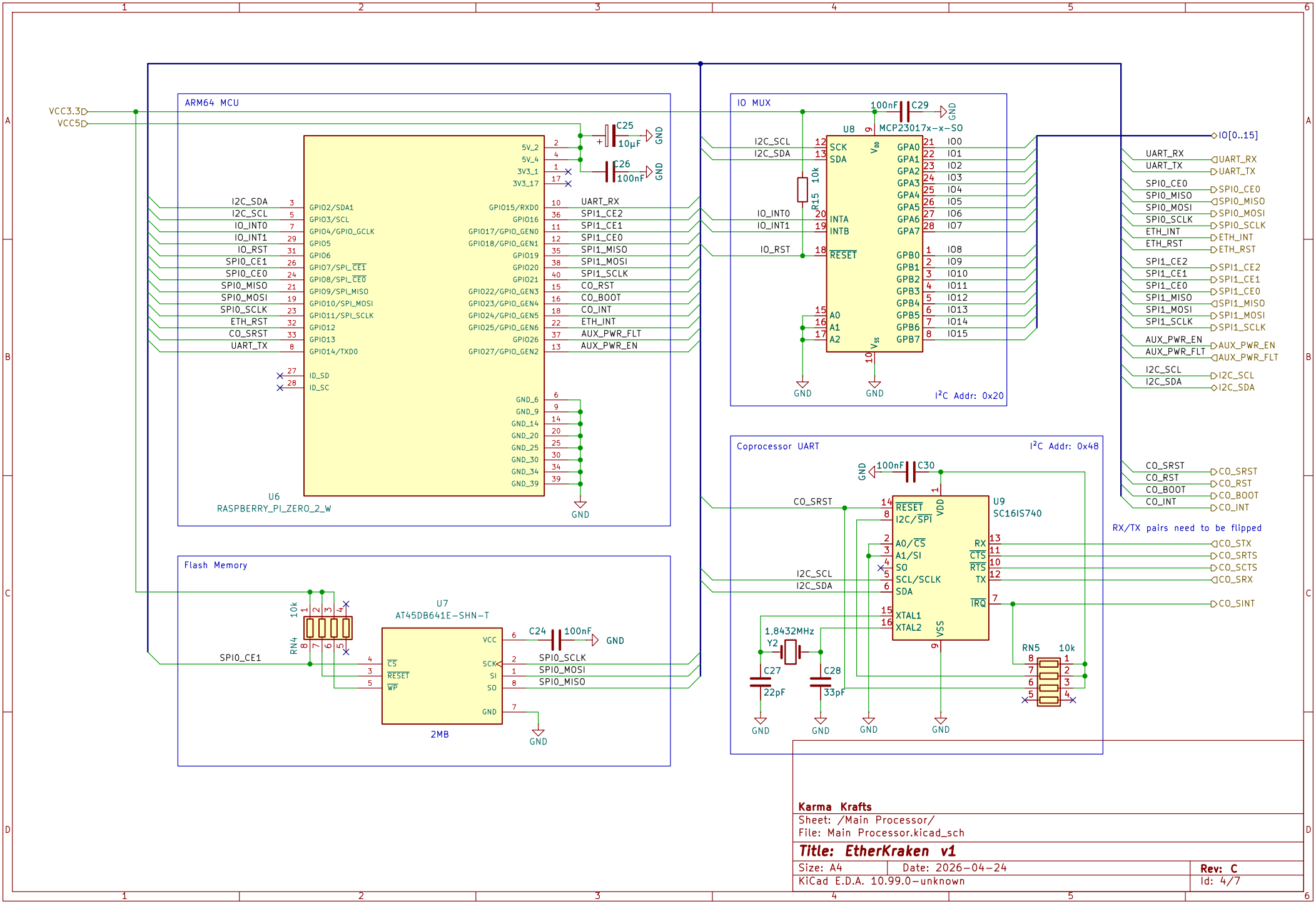
ARM64 MCU
U6
RASPBERRY_PI_ZERO_2_W
IO MUX
U8
MCP23017x-x-SO
I²C Addr: 0x20
Coprocessor UART
I²C Addr: 0x48
U9
SC16IS740
RX/TX pairs need to be flipped
Flash Memory
U7
AT45DB641E-SHN-T
2MB
VCC3.3
VCC5
IO[0..15]
Karma Krafts
Sheet: /Main Processor/
File: Main Processor.kicad_sch
Title: EtherKraken v1
Size: A4
Date: 2026-04-24
Rev: C
KiCad E.D.A. 10.99.0-unknown
Id: 4/7

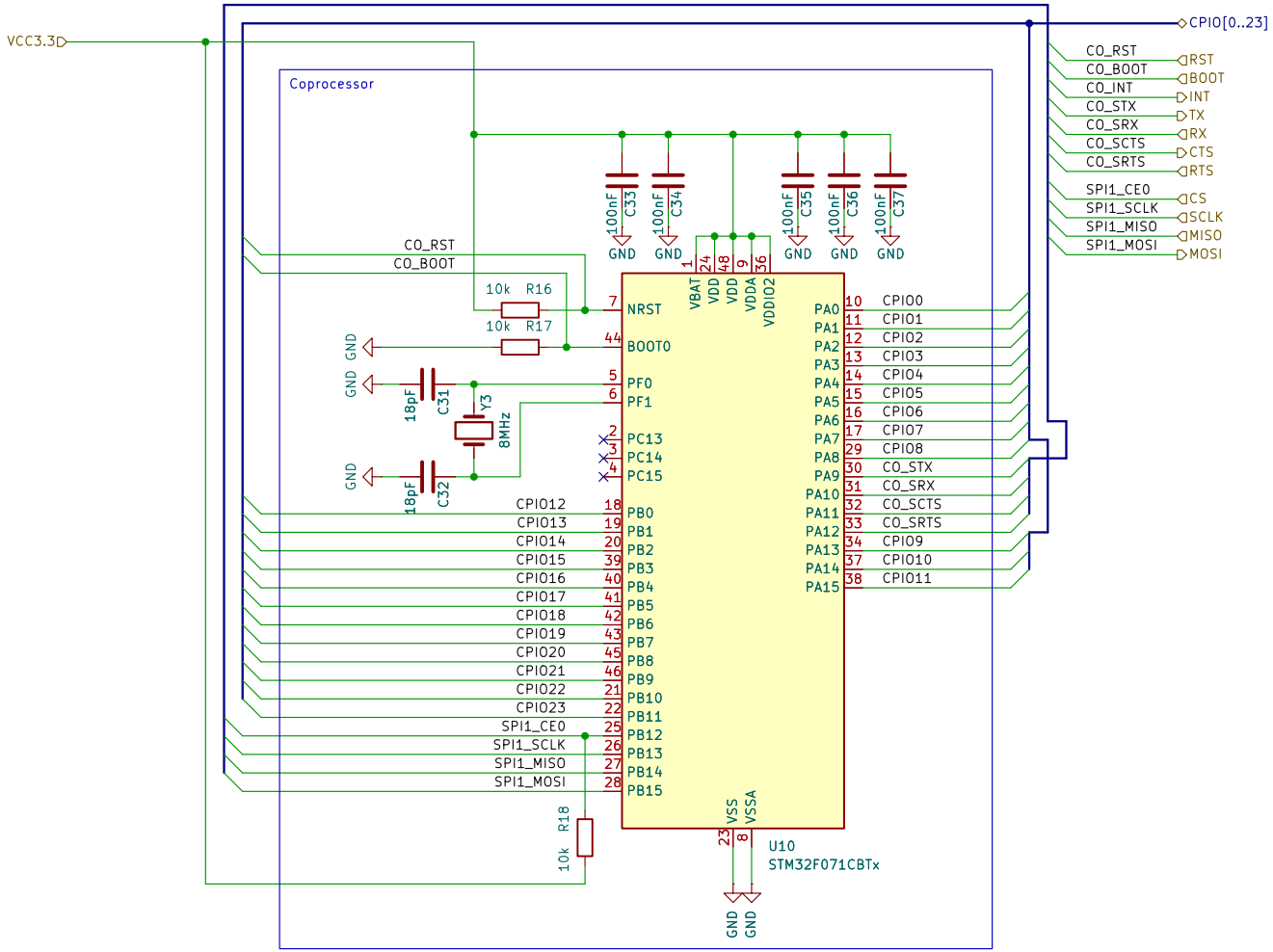

Karma Krafts

Sheet: /Coprocessor/

File: Coprocessor.kicad_sch

Title: EtherKraken v1

Size: A4	Date: 2026-04-24	**Rev: C**
KiCad E.D.A. 10.99.0-unknown		Id: 5/7

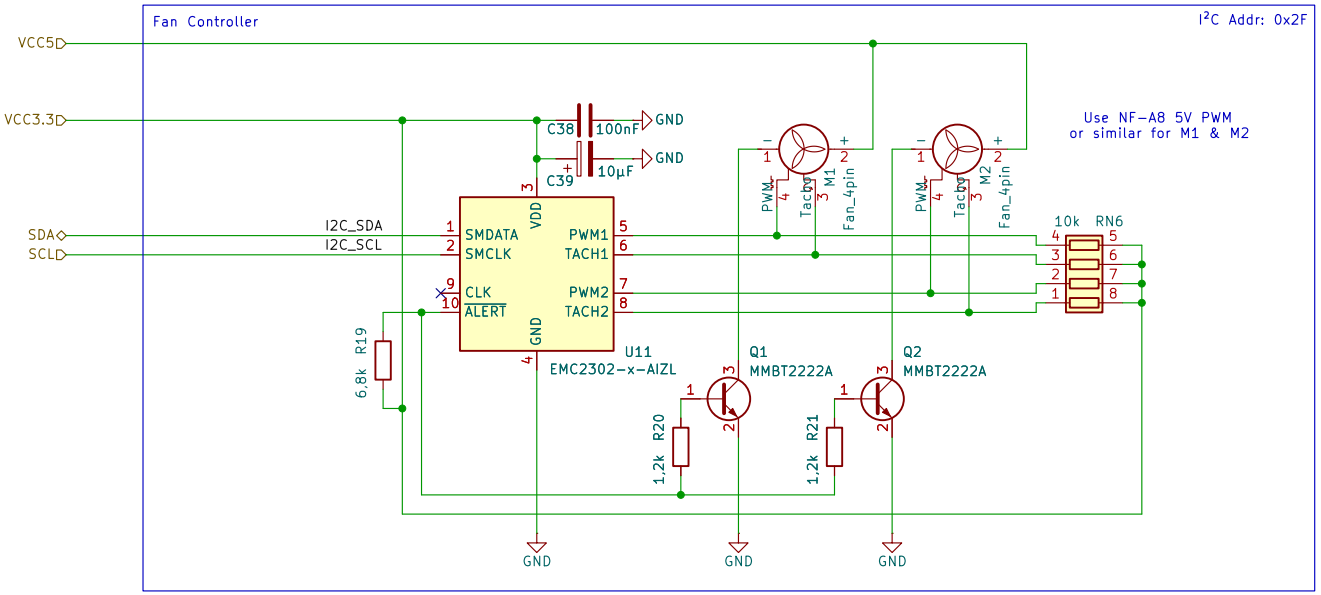

Karma Krafts

Sheet: /Fan Controller/

File: Fan Controller.kicad_sch

Title: EtherKraken v1

Size: A4	Date: 2026-04-24	Rev: C
KiCad E.D.A. 10.99.0-unknown		Id: 6/7

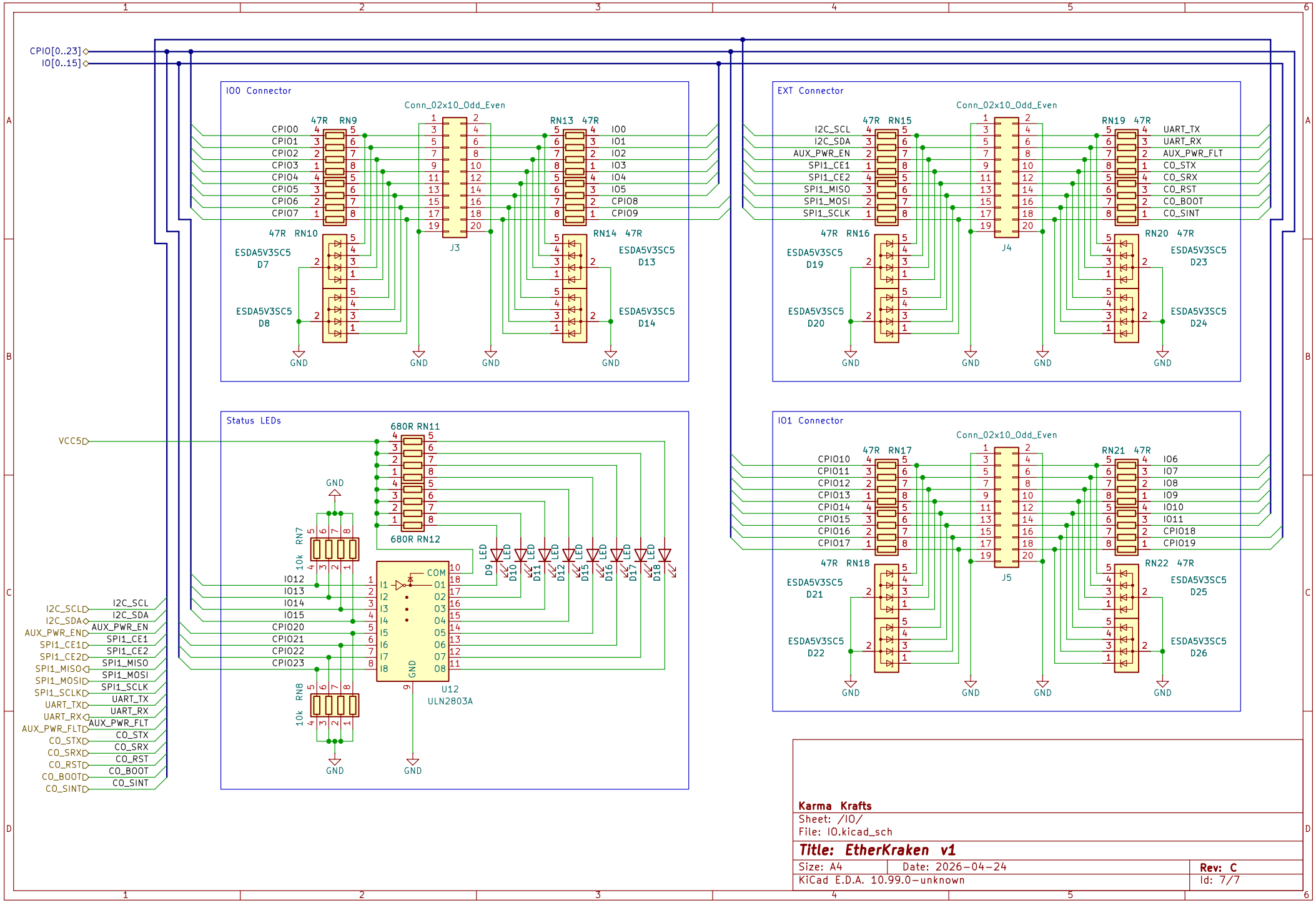
CPIO[0..23]
IO[0..15]
IO0 Connector
Conn_02x10_Odd_Even
J3
EXT Connector
J4
IO1 Connector
J5
Status LEDs
VCC5
680R RN11
680R RN12
RN7 10k
RN8 10k
U12
ULN2803A
I2C_SCL
I2C_SDA
AUX_PWR_EN
SPI1_CE1
SPI1_CE2
SPI1_MISO
SPI1_MOSI
SPI1_SCLK
UART_TX
UART_RX
AUX_PWR_FLT
CO_STX
CO_SRX
CO_RST
CO_BOOT
CO_SINT
ESDA5V3SC5
GND
Karma Krafts
Sheet: /IO/
File: IO.kicad_sch
Title: EtherKraken v1
Size: A4
Date: 2026-04-24
Rev: C
KiCad E.D.A. 10.99.0-unknown
Id: 7/7