8-BIT COMPUTER

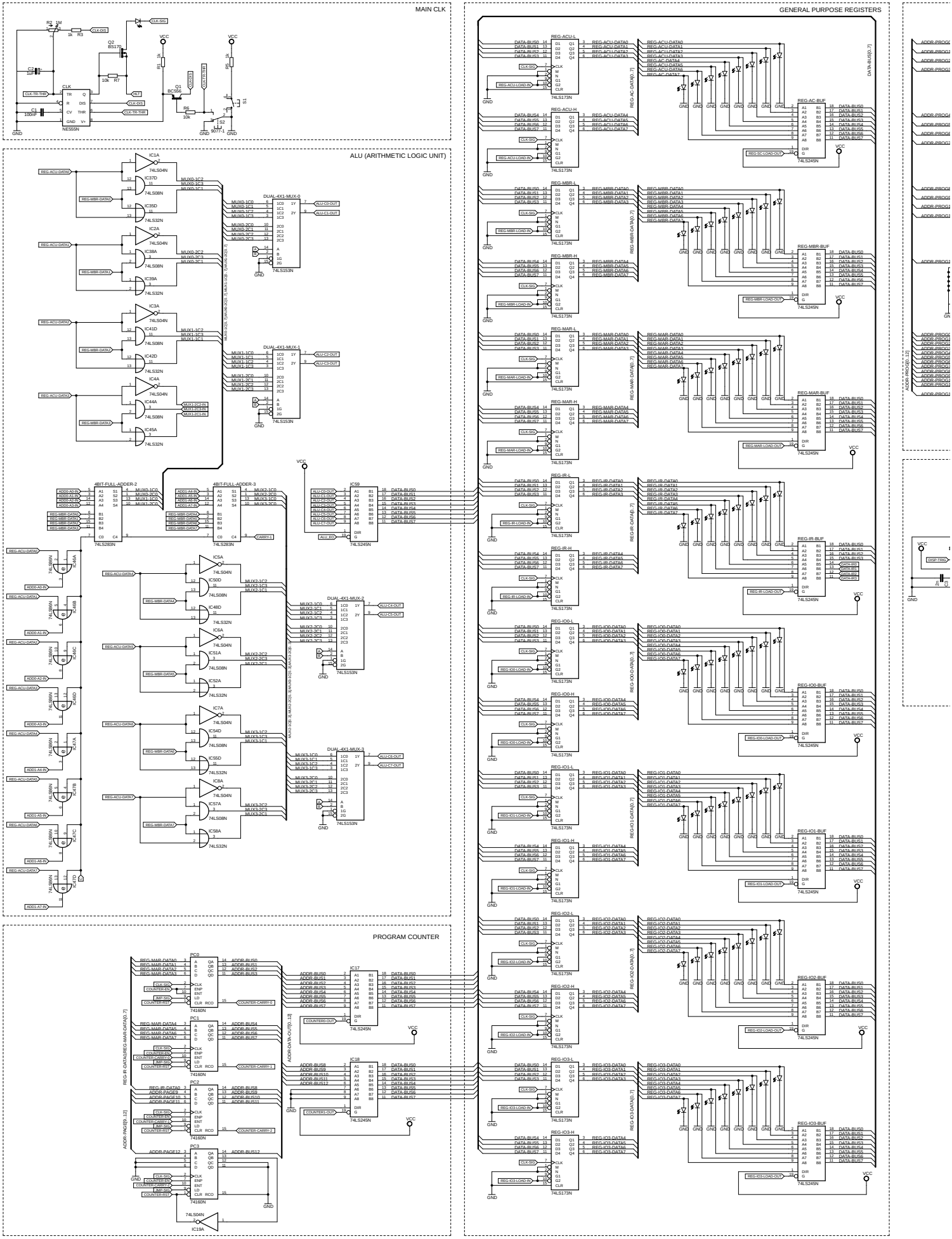

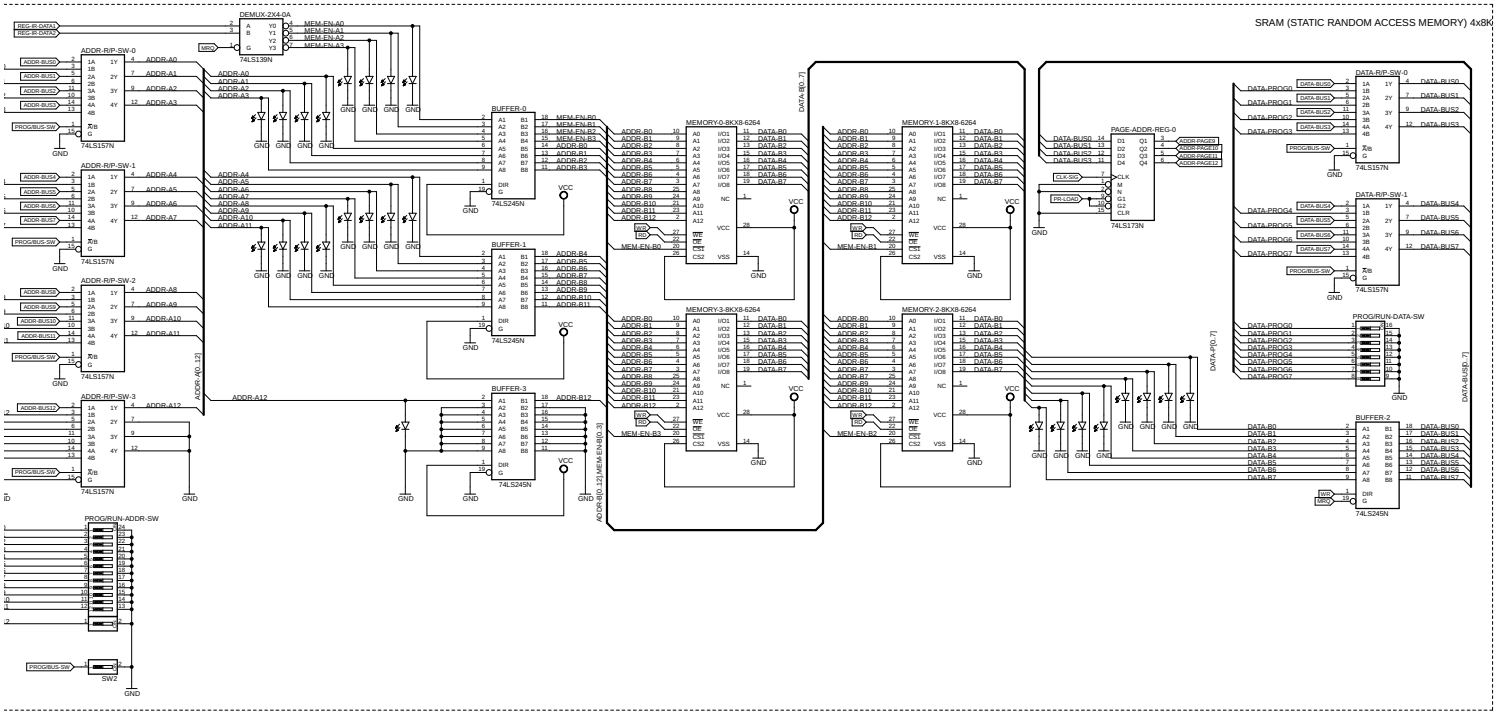
SRAM (STATIC RANDOM ACCESS MEMORY) 4x8K
DEMUX-2X4-0A
74LS139N
ADDR-R/P-SW-0
ADDR-R/P-SW-1
ADDR-R/P-SW-2
ADDR-R/P-SW-3
74LS157N
BUFFER-0
BUFFER-1
BUFFER-3
74LS245N
74LS249N
MEMORY-0-8KX8-6264
MEMORY-1-8KX8-6264
MEMORY-3-8KX8-6264
MEMORY-2-8KX8-6264
PAGE-ADDR-REG-0
74LS173N
DATA-R/P-SW-0
DATA-R/P-SW-1
PROG/RUN-DATA-SW
BUFFER-2
PROG/RUN-ADDR-SW
SW2
ADDR[0..12]
DATA[0..7]
ADDR[0..12],MEM-EN-B[0..3]
DATA[0..7],DATA-BUS[0..7]

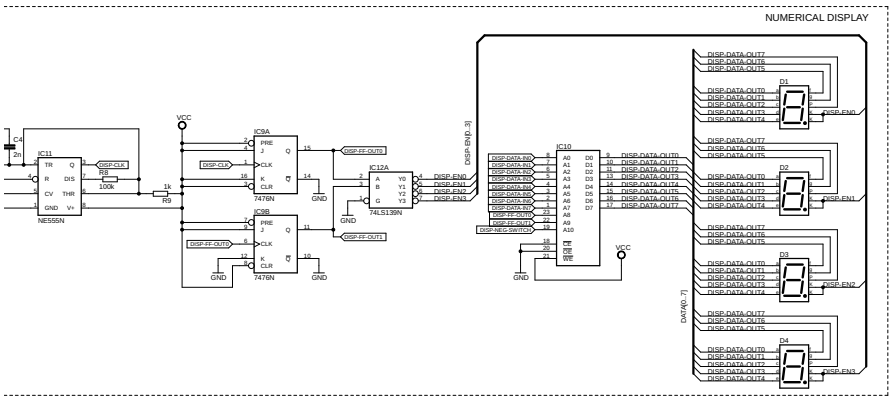
NUMERICAL DISPLAY
NE555N
IC9A
IC9B
7476N
IC12A
74LS139N
IC10
D1
D2
D3
D4
DISP[0..3]
DAT[0..7]