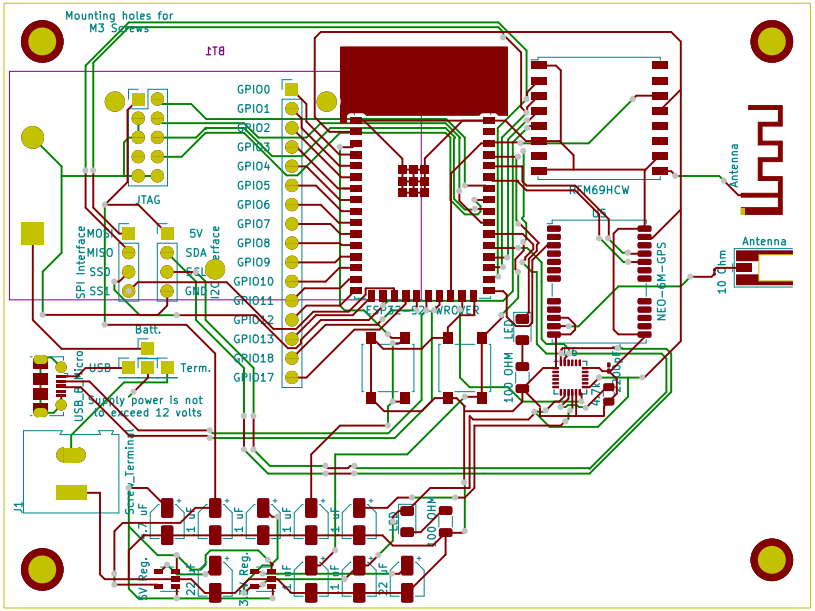


Sheet:
File: GPSPuck.kicad_pcb

**Title: GPS Puck PCB**

| | | |
|---|---|---|
| Size: A | Date: | **Rev: 1** |
| KiCad E.D.A. kicad (5.1.9)-1 | | Id: 1/1 |

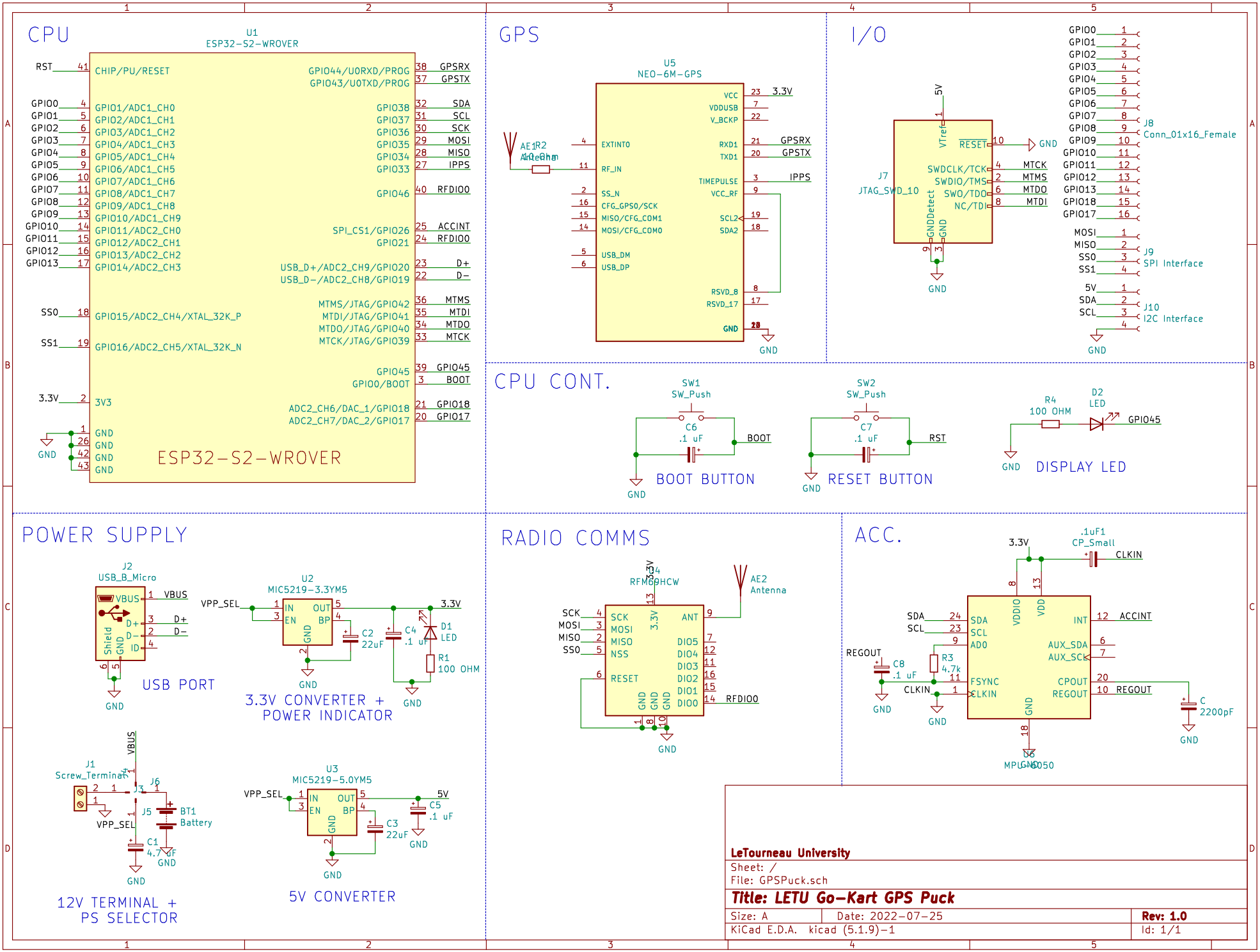
CPU
U1
ESP32-S2-WROVER
RST
CHIP/PU/RESET
GPIO44/U0RXD/PROG
GPIO43/U0TXD/PROG
GPSRX
GPSTX
GPIO0
GPIO1/ADC1_CH0
GPIO38
SDA
GPIO1
GPIO2/ADC1_CH1
GPIO37
SCL
GPIO2
GPIO3/ADC1_CH2
GPIO36
SCK
GPIO3
GPIO4/ADC1_CH3
GPIO35
MOSI
GPIO4
GPIO5/ADC1_CH4
GPIO34
MISO
GPIO5
GPIO6/ADC1_CH5
GPIO33
IPPS
GPIO6
GPIO7/ADC1_CH6
GPIO7
GPIO8/ADC1_CH7
GPIO46
RFDIO0
GPIO8
GPIO9/ADC1_CH8
GPIO9
GPIO10/ADC1_CH9
GPIO10
GPIO11/ADC2_CH0
SPI_CS1/GPIO26
ACCINT
GPIO11
GPIO12/ADC2_CH1
GPIO21
RFDIO0
GPIO12
GPIO13/ADC2_CH2
GPIO13
GPIO14/ADC2_CH3
USB_D+/ADC2_CH9/GPIO20
D+
USB_D-/ADC2_CH8/GPIO19
D-
MTMS/JTAG/GPIO42
MTMS
SS0
GPIO15/ADC2_CH4/XTAL_32K_P
MTDI/JTAG/GPIO41
MTDI
MTDO/JTAG/GPIO40
MTDO
SS1
GPIO16/ADC2_CH5/XTAL_32K_N
MTCK/JTAG/GPIO39
MTCK
GPIO45
GPIO45
GPIO0/BOOT
BOOT
3.3V
3V3
ADC2_CH6/DAC_1/GPIO18
GPIO18
ADC2_CH7/DAC_2/GPIO17
GPIO17
GND
ESP32-S2-WROVER
GPS
U5
NEO-6M-GPS
AE1
Antenna
R2
10 Ohm
EXTINT0
RF_IN
SS_N
CFG_GPS0/SCK
MISO/CFG_COM1
MOSI/CFG_COM0
USB_DM
USB_DP
VCC
VDDUSB
V_BCKP
RXD1
TXD1
TIMEPULSE
VCC_RF
SCL2
SDA2
RSVD_8
RSVD_17
3.3V
GPSRX
GPSTX
IPPS
I/O
5V
VTref
RESET
GND
J7
JTAG_SWD_10
SWDCLK/TCK
SWDIO/TMS
SWO/TDO
NC/TDI
GNDDetect
MTCK
MTMS
MTDO
MTDI
GPIO0
GPIO1
GPIO2
GPIO3
GPIO4
GPIO5
GPIO6
GPIO7
GPIO8
GPIO9
GPIO10
GPIO11
GPIO12
GPIO13
GPIO18
GPIO17
J8
Conn_01x16_Female
MOSI
MISO
SS0
SS1
J9
SPI Interface
5V
SDA
SCL
J10
I2C Interface
CPU CONT.
SW1
SW_Push
C6
.1 uF
BOOT
BOOT BUTTON
SW2
SW_Push
C7
.1 uF
RST
RESET BUTTON
R4
100 OHM
D2
LED
GPIO45
DISPLAY LED
POWER SUPPLY
J2
USB_B_Micro
VBUS
D+
D-
ID
Shield
USB PORT
U2
MIC5219-3.3YM5
VPP_SEL
IN
EN
OUT
BP
C2
22uF
C4
.1 uF
D1
LED
R1
100 OHM
3.3V CONVERTER +
POWER INDICATOR
J1
Screw_Terminal
J3
J6
J5
BT1
Battery
C1
4.7 uF
12V TERMINAL +
PS SELECTOR
U3
MIC5219-5.0YM5
C3
22uF
C5
.1 uF
5V CONVERTER
RADIO COMMS
U4
RFM69HCW
AE2
Antenna
SCK
MOSI
MISO
NSS
RESET
ANT
DIO5
DIO4
DIO3
DIO2
DIO1
DIO0
RFDIO0
ACC.
.1uF1
CP_Small
CLKIN
SDA
SCL
AD0
FSYNC
CLKIN
VDDIO
VDD
INT
ACCINT
AUX_SDA
AUX_SCL
CPOUT
REGOUT
REGOUT
C8
.1 uF
R3
4.7k
C
2200pF
U6
MPU-6050
LeTourneau University
Sheet: /
File: GPSPuck.sch
Title: LETU Go-Kart GPS Puck
Size: A
Date: 2022-07-25
Rev: 1.0
KiCad E.D.A. kicad (5.1.9)-1
Id: 1/1