IEEE Access
Multidisciplinary : Rapid Review : Open Access Journal

Received 10 January 2025, accepted 18 February 2025, date of publication 27 February 2025, date of current version 11 March 2025.

Digital Object Identifier 10.1109/ACCESS.2025.3546338

SURVEY

Intrusion Detection in 5G and Wi-Fi Networks: A Survey of Current Methods, Challenges, and Perspectives

CHERIFA HAMROUN[1,2], ANNE FLADENMULLER[1], (Member, IEEE), MICHEL PARIENTE[2], AND GUY PUJOLLE[1], (Life Senior Member, IEEE)
[1]Computer Laboratory of Paris 6 (LIP6), Sorbonne University, 75005 Paris, France
[2]METEOR Network, 94150 Rungis, France

Corresponding author: Cherifa Hamroun (chamroun@meteornetworks.com)

This work was supported by METEOR Network Company and the Computer Laboratory of Paris 6 (LIP6) under an Industrial Agreement for Training through Research (CIFRE) Contract.

ABSTRACT The convergence of 5G and Wi-Fi networks has become a cornerstone of next-generation communication systems, offering seamless connectivity, improved performance, and diversified use cases. However, this integration introduces unique security challenges, particularly in the context of intrusion detection systems. This survey explores the threats and vulnerabilities inherent in 5G and Wi-Fi access networks, highlighting the need for customized intrusion detection solutions in these environments. In addition, we present the various types and architectures of intrusion detection systems, the existing datasets used to evaluate their performance, and the recent detection methods that accurately identify the presence or absence of an attack. Furthermore, the paper provides a comprehensive overview of state-of-the-art studies, positioning them within current 5G/Wi-Fi architectures. Finally, we highlight the key architectural differences and conclude by discussing the implications of 5G/Wi-Fi architectural convergence in the development of future intrusion detection systems. This convergence raises crucial concerns about the integration of security mechanisms in a unified ecosystem. Hence, this work aims to serve as a foundation for future research on robust and scalable detection mechanisms in converged 5G/Wi-Fi networks.

INDEX TERMS 5G, architectures, convergence, intrusion detection systems, machine learning, rules, signatures, Wi-Fi.

I. INTRODUCTION

The rise of 5G and Wi-Fi networks has transformed global connectivity, enabling faster speeds and lower latencies. These two access technologies are reshaping industries such as healthcare, manufacturing, transportation, retail, media, education, and smart cities by fostering faster connectivity, Internet of Things (IoT) integration, real-time data processing, and innovative applications such as telemedicine, autonomous vehicles, and smart grids. However, this evolution has significantly expanded the attack surface, presenting notable security challenges.

The associate editor coordinating the review of this manuscript and approving it for publication was Ramoni Adeogun.

Recent developments highlight the increasing complementarity between 5G and Wi-Fi networks [1]. While Wi-Fi dominates local indoor environments, 5G supports broader and more dynamic use cases across industries. Consequently, the convergence of Wireless Local Area Networks (WLAN) and cellular networks is poised to play a critical role in meeting the connectivity demands of dense 5G and Beyond (5G&B) as well as 6G networks. This convergence is widely regarded as a key enabler for the deployment of Ultra-Dense Networking (UDN) and Ultra-Reliable Low Latency Communication (URLLC) use cases [2]. The advent of 5G has raised questions about its integration with existing Wi-Fi networks, prompting the scientific community to advance Wi-Fi standards to align with 5G system requirements. This alignment is expected to create a unified transport

© 2025 The Authors. This work is licensed under a Creative Commons Attribution 4.0 License.
For more information, see https://creativecommons.org/licenses/by/4.0/

infrastructure capable of meeting stringent communication demands while supporting diverse vertical applications [3].

However, the flexibility of this convergence comes with greater security risks. Having two distinct access technologies doubles the potential vulnerabilities attackers can exploit, in addition to upper-layer threats such as Domain Name System (DNS) attacks, which are independent of the underlying access technology. Wireless networks remain particularly susceptible to attacks on the physical layer due to their exposure via radio waves. Moreover, the network architecture itself is prone to threats that can compromise data integrity or disrupt availability. Although traditional security mechanisms such as authentication, encryption, and access control have been improved for cellular and wireless networks, they are often insufficient, particularly due to the lack of widespread "zero-trust" implementations in current deployments [4]. Consequently, Intrusion Detection Systems (IDS) have become a critical additional layer of defense for monitoring and identifying suspicious activities [5].

As new use cases emerge and data volumes in cellular and wireless networks grow, the focus of manufacturers has primarily been on increasing transmission rates. This emphasis has inadvertently made real-time attack detection more challenging for traditional mechanisms relying on raw packet inspection. Therefore, the demand for advanced IDS solutions with precise detection capabilities and rapid processing for real-time threat analysis is increasing [6], [7]. To address increasingly sophisticated threats, IDS technologies are evolving to incorporate artificial intelligence-based techniques that can predict and detect unknown zero-day attacks.

In this paper, we discuss the security challenges posed by attacks targeting 5G and Wi-Fi networks, analyze the capabilities and limitations of IDSs in these environments, and propose future directions to improve IDS effectiveness in securing these networks.

Our contributions are as follows:

- *Attack Landscape:* A comprehensive description of common attacks targeting 5G and Wi-Fi networks.
- *Intrusion Detection Systems:* An examination of IDSs, focusing on detection engines, datasets, feature selection methods, detection strategies, and evaluation metrics, along with recently proposed architectures.
- *IDS specific to 5G and Wi-Fi Networks:* A detailed analysis of research on IDSs in 5G and Wi-Fi networks, including feature selection processes, detection strategies, and reported performance. We also outline where every proposed module is placed in 5G and Wi-Fi architectures.
- *5G/Wi-Fi Convergence:* A discussion of current standardization efforts and insights into the convergence of 5G and Wi-Fi technologies.
- *Insights, challenges and Open Issues* Open avenues in the development of appropriate IDS solutions tailored to the unique requirements of the converged 5G/Wi-Fi environment.

The remainder of this paper is structured as follows: Section II provides an overview of the existing surveys and the motivation for this work. Sections III and IV describe common attacks against 5G and Wi-Fi networks, respectively. Section V focuses on IDS types and architectures. Sections VII and VIII summarize the literature on intrusion detection mechanisms in Wi-Fi and 5G networks, identifying challenges and future directions. Section IX focuses on ongoing standardization efforts related to the convergence of 5G and Wi-Fi networks. Section X addresses the open challenges in 5G/Wi-Fi intrusion detection, highlighting key issues that need to be resolved for successful integration and deployment. Finally, Section XI concludes with perspectives on future research opportunities. An overview of these sections and key contributions is depicted in Figure 1.

II. EXISTING SURVEYS

Several surveys address Wi-Fi and 5G security threats, countermeasures, and intrusion detection systems separately. This section gives an overview of the most relevant publications, highlighting overlaps with our study and areas of divergence.

Ozkan et al. [8] present an extensive survey of intrusion detection systems, focusing on their fundamental features, taxonomies, and enabling technologies. The paper evaluates various intrusion detection methodologies, discussing their strengths, weaknesses, and commonly used datasets for evaluation. In addition, it reviews 11 widely adopted IDS tools, detailing their detection methods, advantages, and limitations, and examines current challenges with proposals to improve IDS effectiveness. This survey aligns with our work by exploring Wireless Intrusion Detection Systems (WIDS) as a distinct category, summarizing 10 related studies, and demonstrating WIDS' ability to detect WLAN protocol-level attacks, misconfigurations, and policy violations in IEEE wireless and cellular architectures.

Angueira et al. [9] present a survey on wireless security techniques in Factory Automation networks, specifically focusing on the lower layers of the OSI model (PHY/MAC). The survey examines how System Performance Factors (SPFs), such as end-to-end latency, reliability, scalability, range, payload size, update rate, and cost, affect the selection of security strategies across various industrial use cases. A detailed taxonomy of attacks targeting the PHY/MAC layers is provided, along with corresponding countermeasure techniques of authentication and encryption. The paper also reviews key wireless technologies for industrial applications, including the IEEE 802.11 family and 5G URLLC, highlighting their security, reliability, and latency limitations. It emphasizes the absence of a widely accepted standard for wireless communications in industrial environments and highlights the need to address the computational limitations of industrial nodes, such as sensors and actuators, and identifies a significant research opportunity in leveraging Machine Learning (ML) as a decision engine for authentication and attack detection. The authors identify this issue as a future prospect worth exploring, though they do not elaborate on the

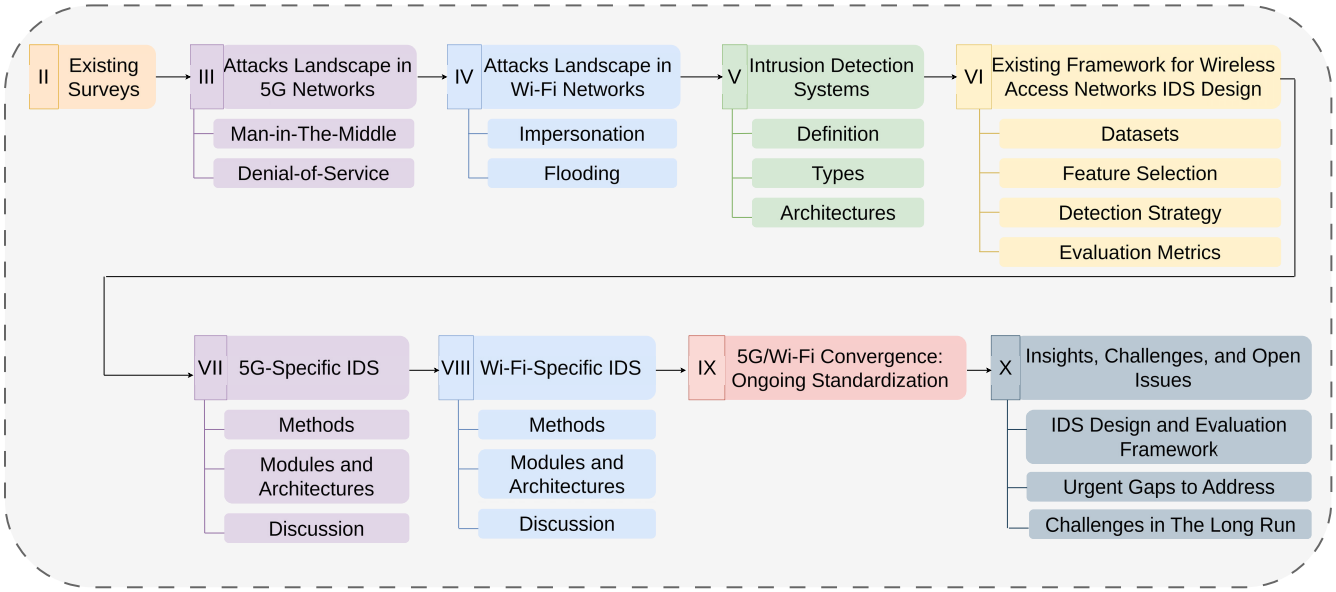

FIGURE 1. Paper organization and key contributions.

methods for detecting such attacks. In contrast, our review bridges this gap by thoroughly analyzing existing defense mechanisms and exploring validated detection approaches in various contexts.

Szott et al. [10] explore various areas where Machine Learning (ML) is applied to enhance Wi-Fi performance. It begins with an investigation of core Wi-Fi features, focusing on how ML can optimize selection, channel access, frame aggregation, and link parameter configuration in the physical layer. Then, they examine ML's role in supporting advanced Wi-Fi features, such as channel bonding, spatial reuse, and multi-band operation. They also discuss the use of ML for Wi-Fi connectivity management, coexistence of Wi-Fi with other technologies, and its application to multi-hop Wi-Fi deployments. Finally, they review available tools and datasets used for developing ML models in Wi-Fi networks and provide an overview of future research directions and open challenges. Motivated by the lack of dedicated surveys on Wi-Fi performance optimization using ML, this work aims to fill that gap by focusing on key improvements in Wi-Fi features. The authors also discuss Wi-Fi coexistence with 5G/6G technologies using ML techniques for the dynamic and competitive sharing of unlicensed spectrum. On our side, in this review, we highlight ongoing standardization efforts aimed at achieving Wi-Fi and 5G convergence, independent of the spectrum employed. In addition, it explores the applications of machine learning methods for enhancing the security of Wi-Fi and 5G networks, addressing challenges and opportunities in this evolving landscape.

Boualouache et al. [11] focus on ML-based Misbehavior Detection Systems (MDS) for 5G-Vehicle-to-Everything (5G-V2X) networks. MDSs have a larger role than IDSs since they are developed to handle both network anomalies and network attacks. This work provides an overview of the 5G-V2X architecture, security, privacy requirements, and various attack classifications. The paper categorizes ML-based MDSs into non-IP-based and IP-based V2X applications, addressing specific attacks such as position falsification, Sybil attacks, DoS, and wormhole attacks, as well as multiple attack detection. The authors analyze these systems and offer recommendations and lessons learned for developing, validating, and deploying effective MDSs. The survey also identifies open research and standardization issues, such as dataset benchmarking, zero-day attacks, context awareness, and security/privacy concerns. The paper compares two key V2X communication technologies: IEEE 802.11p and Cellular-V2X (C-V2X), with C-V2X emerging as the dominant technology due to its support in 3GPP LTE releases. This work is particularly valuable, as it addresses the detection of misbehavior in 5G-V2X networks, which represents one of the key use cases of 5G technology. In contrast, our review focuses on intrusion detection within the broader context of 5G and Wi-Fi networks, with an emphasis on methods that support ongoing convergence standardization efforts. Consequently, 5G-V2X can be viewed as one of many use cases in which our objective is to identify and survey efficient defense mechanisms.

Upon reviewing the existing literature, it becomes apparent that there is a noticeable gap in addressing intrusion detection systems specifically tailored for Wi-Fi and 5G networks. Most existing surveys either give cursory attention to the topic or incorporate it as a smaller secondary component of broader security frameworks. While there is considerable research on network security, few works provide an in-depth focus on intrusion detection mechanisms that address the unique challenges and characteristics of Wi-Fi and 5G

technologies simultaneously. This oversight is particularly striking given the increasing complexity of these networks, the proliferation of novel techniques, and the evolving threat landscape. In addition, the convergence of Wi-Fi and 5G networks in modern communication ecosystems has introduced new dimensions of vulnerability, demanding a more integrated approach to security. For instance, techniques such as machine learning-based anomaly detection, have shown promise but are still not sufficiently explored in the context of Wi-Fi-5G convergence. With the rise of new detection methods and frameworks that span these two distinct yet increasingly interconnected technologies, it becomes crucial to establish a state-of-the-art review that consolidates existing knowledge. Thus, this review would not only provide a holistic view of the current landscape but also identify key research gaps and propose future directions to improve intrusion detection across Wi-Fi and 5G networks, thus paving the way for more robust and adaptive security solutions.

III. ATTACKS LANDSCAPE IN 5G NETWORKS

To improve the security features of older-generation mobile networks, major refinements have been introduced for 5G technology, including the International Mobile Subscriber Identity (IMSI) information encryption function to protect subscriber information (IMSI user identifier stored in SIM card), Security Edge Protection Proxy (SEPP) to solve the Signaling System No.7 (SS7) security issues between roaming domains and to implement the application layer security function between different carriers (i.e., public land mobile network) and the integrated authentication framework (i.e., security anchor function (SEAF)), which can use the same authentication method for 3GPP access (5G devices) and non-3GPP access (Wi-Fi devices). SEAF enables devices to be re-authenticated without executing a full authentication method (e.g., AKA authentication), even when they move between different access networks or between different service networks [12]. Enhanced encryption and mutual authentication are fundamental to 5G, ensuring that both the device and the network authenticate each other, reducing the likelihood of unauthorized access. However, 5G's complex architecture introduces new risks and vulnerabilities. The complexity of these networks can lead to weak linkages arising from the interconnection of networks and devices with different security requirements and different levels of defense mechanisms. Here we list the two types of attack facing 5G networks: attacks compromising network availability (Denial-of-Service), and attacks compromising data confidentiality and integrity (man-in-the-middle). However, another taxonomy for these attacks was proposed in [12], based on the targeted domain of the 5G infrastructure: attacks targeting user equipment (UE domain), attacks targeting the Radio Access Network (RAN domain), attacks targeting the Edge and Core Network domain and attacks targeting the domain network (Service Interconnection domain). Among these attacks, they also include attacks that may arise

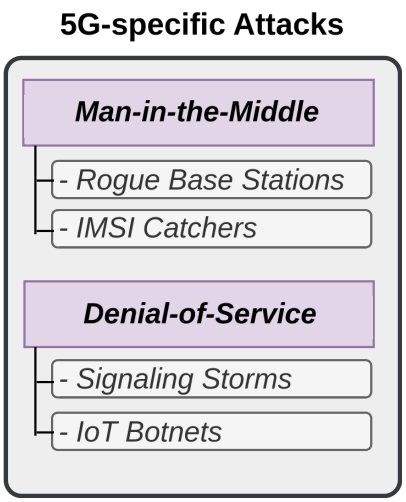

FIGURE 2. List of man-in-the-middle and denial-of-service attacks threatening 5G access networks, including rogue base stations and IMSI catchers for data interception and signaling storms and IoT botnets for network connection interruption.

from vulnerabilities emanating from the design of certain connectivity paradigms in 5G, such as Network Slicing (NS) attacks, Software Defined Networking (SDN) attacks, Network Function Virtualization (NFV) attacks, and Mobile Edge Computing (MEC) attacks. Figure 2 shows an overview of attacks that are specific to 5G technology.

A. DENIAL-OF-SERVICE (DoS) AND DISTRIBUTED DENIAL-OF-SERVICE (DDoS)

A 5G DoS attack aims to interrupt the function of a specific component of the 5G network, such as base stations or core virtual network functions, by overwhelming it with excessive traffic or requests, rendering services temporarily or permanently unavailable. A 5G DDoS attack is a distributed form of this disruption, where multiple compromised devices flood the network with malicious traffic simultaneously and faster. 5G networks are particularly vulnerable to these attacks due to their support for massive device connectivity enabled by expanded bandwidth. In addition, the next-generation distributed cellular architecture, which incorporates advanced features such as network slicing and edge computing, introduces new attack surfaces.

1) IoT BOTNETS

The massive number of IoT devices expected to connect via 5G networks presents another significant security challenge. Attackers exploit IoT devices connected via 5G to inject malicious code, creating large botnets that can be remotely controlled through a Command and Control (C&C) server. As the installation of a high-level security function for low-end IoT devices is difficult, many IoT devices have minimal built-in security with weak passwords and old protection. Therefore, they are more likely to be exposed to exploitation. One of the most frequently targeted components

for this type of attack are the RAN radio resources. Botnets flood the RAN by requesting excessive access to wireless resources simultaneously. The scalability of 5G, which can support billions of devices, magnifies the potential impact of such vulnerabilities.

2) SIGNALING STORMS

A 5G signaling storm is a type of Distributed Denial of Service (DDoS) attack that exploits the control plane of the 5G network by overwhelming it with an excessive volume of signaling messages. Unlike traditional attacks that flood the data plane with traffic, signaling storms target the processes responsible for managing connections, mobility, and session control, creating resource bottlenecks in the core network. When devices, either compromised or poorly configured, continuously send connection requests, session establishments, or mobility-related signals, it forces the network to process these tasks repeatedly. This can lead to significant congestion in core components such as the Access and Mobility Management Function (AMF) or the Session Management Function (SMF), exhausting computational resources, and slowing down legitimate network functions. The introduction of advanced features in 5G, such as network slicing, virtualization through Network Functions Virtualization (NFV), and massive IoT connectivity, presents additional attack surfaces for signaling storms.

B. MAN-IN-THE-MIDDLE ATTACKS (MitM)

Man-in-the-middle attacks occur when an attacker intercepts and potentially alters communication between two parties anonymously. In 5G networks, this can involve exploiting vulnerabilities in protocols, encryption, or authentication processes to eavesdrop on or manipulate data in transit. MitM attacks can target sensitive applications, such as financial transactions, posing risks to user privacy and data integrity.

1) ROGUE BASE STATIONS

Attackers set up a fake base station, known as a rogue Next-Generation Node B (gNodeB), which impersonates a legitimate one to deceive nearby devices into connecting to it and eavesdrop on communications, steal sensitive data, manipulate traffic, or inject malicious traffic. To solve earlier-generation vulnerabilities, 5G introduces robust security mechanisms, including mutual authentication and subscriber identity protection (through Subscriber Concealed Identifier (SUCI)). However, this attack exploits vulnerabilities in the initial connection phase, where the mobile device can choose to connect to the rogue station based on its signal strength, bypassing the 5G's mutual authentication mechanisms. Moreover, the initial network discovery or fallback to older standards like 4G can still be exploited. The downgrade attacks are common variants of rogue base station where the latter forces the device to use less secure protocols, like 4G or 2G, to make it easier to intercept and decrypt data. Additionally, attackers can collect sensitive information, such as the International Mobile Subscriber Identity (IMSI), to track user locations. The challenge in detecting rogue gNodeBs stems from their ability to mimic legitimate network services, making it difficult for users and devices to discern the attack.

2) INTERNATIONAL MOBILE SUBSCRIBER IDENTITY (IMSI) CATCHERS

IMSI Catchers (also known as Stingrays or cell site simulators) are surveillance devices used to intercept mobile phone signals by impersonating legitimate cell towers. These devices exploit the way mobile phones automatically connect to the strongest signal, tricking nearby phones into connecting to them instead of an authentic base station. Once a phone connects, the IMSI catcher can capture the device's IMSI, which is a unique identifier linked to the phone's SIM card. Although IMSI catchers primarily focus on identifying and tracking devices, more advanced versions can intercept unencrypted communications, such as calls or text messages, by downgrading the network from 4G/5G to older, less secure protocols like in 2G. Once IMSI is captured, attackers can track the user's location, intercept communications, or carry out further attacks such as identity theft or targeted surveillance. Legal and ethical concerns have emerged because IMSI catchers operate covertly and their indiscriminate nature means they gather information from bystanders who are not under investigation. In response, modern mobile networks employ stronger encryption and techniques such as Subscriber Concealed Identifier (SUCI) to protect against IMSI exposure, but vulnerabilities still exist, particularly in older mobile standards.

IV. ATTACKS LANDSCAPE IN Wi-Fi NETWORKS

The Wi-Fi Alliance and IEEE 802.11 work in tandem to standardize wireless communication. The IEEE develops the technical specifications for wireless networking through its 802.11 standards, while the Wi-Fi Alliance ensures the practical implementation of these standards by certifying devices for interoperability, performance, and security under the "Wi-Fi Certified" program. IEEE introduced the Robust Security Network Association (RSNA) to address vulnerabilities in earlier Wi-Fi security protocols, including Wired Equivalent Privacy (WEP) and Wi-Fi Protected Access (WPA) by establishing a robust framework for authentication, encryption, and key management. RSNA is the foundation for modern Wi-Fi security protocols like WPA2 and WPA3. Regardless of the existence of data protection and security association mechanisms, Wi-Fi networks are still exposed to a variety of attacks [13]. Earlier Wi-Fi encryption standards were notoriously weak and easily broken. Even WPA2, which became the standard for securing Wi-Fi networks, faced significant vulnerabilities that exposed data transmitted over Wi-Fi to the threat of interception. Although WPA3 has addressed many of these weaknesses, adoption is still ongoing and many networks remain vulnerable. In this section, we cover attacks that are solely exercised in the Media Access Control (MAC) layer of the IEEE 802.11 family of networks

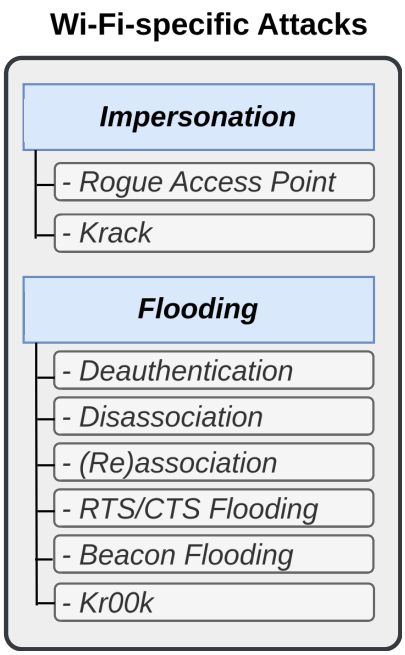

FIGURE 3. List of impersonation and flooding attacks threatening Wi-Fi access networks, including rogue access points and Krack that are commonly used for key re-installation and deauthentication, disassociation, (Re)association, Kr00k, RTS/CTS, and beacon flooding commonly used for overwhelming the network.

commonly known as Wi-Fi. Such attacks are considered trivial to mount in versions of the standard up to 802.11n or Wi-Fi 4, since management messages are transmitted in plain text [14]. As a result, attackers rely on the broadcast of forged management frames to compromise victim credentials and data. These attacks can be classified according to different taxonomies. However, there are two main categories that often appear in the literature. In paper [15], the authors consider the two categories to be Denial of Service (DoS) and Key Re-installation. The authors in [14] provided another nomenclature for the same two categories, namely availability attacks referring to DoS attacks and man-in-the-middle (MiTM) attacks referring to Key Re-installation attacks. In a similar way, the authors in [16] refer to these two categories as flooding and impersonation, respectively. In the following, we use the latter (Flooding and Impersonation) to designate the two categories of attack. Figure 3 shows an overview of these attacks.

A. IMPERSONATION ATTACKS

An attacker who performs an impersonation attack needs to infiltrate the network and act as a man-in-the-middle by intercepting and manipulating data. This attacker can be a silent participant that only intercepts communication between participants, or can take active action and manipulate data by reinstalling a pairwise or group key to take over the victim's device [15]. However, all this can only be achieved while remaining unnoticed by other participants.

1) ROGUE ACCESS POINT (ROGUE AP)

Rogue APs are unauthorized access points (either hardware or software APs) enabled within the corporate, home or office premises by an insider of that network. Intruders with ulterior motives can configure these settings without the permission of the network administrator to make a security policy more convenient for them or to leave a backdoor open for intruders [14]. Rogue APs are usually connected to the wired counterpart of the network, although, the wireless connection is not uncommon especially for software APs. The detection of such devices is challenging especially when the illegitimate AP operates on the same channel and masquerades itself under the same MAC address and Service Set Identifier (SSID) as the legitimate AP. If this AP emits a stronger signal than the legitimate one, an STA may be lured to connect to it [15]. By combining this with other techniques, such as DNS spoofing, the attacker can gain sensitive information from unsuspecting users [17]. This attack is considered as a stepping stone to various other attacks including the evil twin attack, the Karma attack, and the replay attack.

2) KRACK

Today, most Wi-Fi networks are secured using Wi-Fi Protected Access (WPA) protocols. In these protocols, a client authenticates and associates with the AP through a "4-way handshake" (the exchange of four messages between the supplicant (client) and the authenticator (AP)). The authentication is based on the Pairwise Master Key (PMK). The client installs the session key (Pairwise Transient Key (PTK)) derived from the PMK after receiving Message 3. However, due to potential frame loss during transmission, if the AP does not receive a response after sending Message 3, it will retransmit the message with a reset nonce. This exploit takes advantage of the fact that retransmissions of either the first or the third message of the 4-way handshake should occur if the AP does not receive message two or four, respectively. The Man-in-The-Middle blocks message four from reaching the AP, that will re-transmit the same message toward the STA inducing a re-installation of the same Pairwise Transient Key (PTK) / Group Transient 4-way handshake. As a result, the attacker will easily decrypt or forge packets transmitted during the session [15], [17], [18].

B. FLOODING ATTACKS

Flooding attacks compromise the availability of network services. They usually target specific clients or try to overload network resources by coordinating numerous traffic sources and sending many forged, synchronized, and abundant packets to break down the basic building blocks of an IEEE 802.11 network, namely the Station (STA) or client and the Access Point (AP). Exhausted by these requests, the targets can no longer provide an efficient service [19].

1) DEAUTHENTICATION ATTACK

This attack is the simplest and most efficient flooding attack in IEEE 802.11 networks, as it can be easily mounted and its results have an immediate impact on the network. In the absence of Protected Management Frames (PMF), deauthentication management frames are transmitted unprotected or in plain text, making them vulnerable to spoofing by any ill-motivated entity. Therefore, the source MAC address of the deauthentication frame can easily be spoofed. When the attack ends, the STA will immediately try to reconnect to the preferred AP (the closest that has the strongest signal). Therefore, this attack is often used as a stepping stone for launching advanced ones. On the bright side, most manufacturers eliminate the deauthentication frame, therefore this attack will probably not occur in newer devices [15], [20].

2) DISASSOCIATION ATTACK

The disassociation attack is very similar to the deauthentication one in methodology, ease of use, and effects. A disassociation frame is sent to disassociate the STA from the AP or vice-versa. This can occur for several reasons, including roaming when the STA is about to be associated with another AP. The effects of receiving this type of frames are, in theory, expected to be short-lived in comparison to deauthentication. Indeed, there is a smaller amount of procedures involved for the client to return from non-associated back to associated state. Thus, the duration of service loss is expected to be shorter [14].

3) (RE)ASSOCIATION

The association process between the STA and the AP takes place after a successful authentication. It involves the exchange of a pair of association request/response frames, where the response stemming from the AP designates a success or failure, and if successful, a unique Association Identifier (AID). Regarding (re)association request/response frames, they are used when an STA is already associated with an AP and wishes to associate with another in the same Extended Service Set (ESS). In this case, the attacker tricks the client device into disassociating from its legitimate AP and then re-associating with the attacker's AP instead. Once the client device is connected to the attacker's AP, the attacker can intercept wireless traffic, steal sensitive information, and launch other attacks [17].

4) KR00K

This vulnerability was formally defined as CVE-2019-15126 and documented in CVE-2020-3702. It is related to Krack attacks and it applies to WPA2 as well. As soon as an STA is disassociated, the Temporal Key (TK) is cleared in memory, i.e., set to all-zero. The researchers observed that all data frames in the Wireless Network Controller's (WNIC) queue might be then transmitted while encapsulated with this static all-zero key. The attacker, even if he is not authenticated and associated to the wireless network, may take advantage of this situation by disassociating the devices or passively eavesdropping on the wireless medium [15].

5) REQUEST TO SEND (RTS)/CLEAR TO SEND (CTS) FLOOD

RTS/CTS message pair is an optional mechanism to control access to the transmission medium in IEEE 802.11 networks. When this mechanism is enabled and an STA has data for transmission in its queue, it sends an RTS frame to gain access to the transmission medium for a pre-specified amount of time. This privilege is actually granted upon receiving the CTS frame. In CTS flooding attack, the attacker constantly transmits CTS frames to itself or another STA while setting the duration to its maximum value. This forces the rest of the STAs in the network to continuously postpone their transmission. An RTS flooding attack also takes advantage of the RTS/CTS mechanism. It transmits a number of spoofed RTS frames with possibly a large transmission duration window, aiming to monopolize the wireless medium in a way that might force the rest of the STAs to stop transmitting. The outcome is that the STA is made to wait for a non-existent transmission, thereby obstructing other client's access to the medium [14], [17].

6) BEACON FLOOD

The Beacon Flooding attack can be carried in two different ways. In the first case, the attacker will transmit a constant stream of fake beacon frames that advertise non-existing Extended Service Set Identifiers (ESSID). This will cause an overflow to the list of available networks, making it troublesome for the end-user to locate his preferred one. In the second case, the attacker will transmit a flood of spoofed beacon frames with a specific ESSID which corresponds to different (non-existing) Basic Service Set Identifiers (BSSID). Depending on the implementation, the client(s) will probably go into an endless loop of checking if each of the synonymous ESSIDs and BSSIDs corresponds to an existing network [14].

V. INTRUSION DETECTION SYSTEMS (IDS)

As attackers continue to discover vulnerabilities even in security protocols, manufacturers have been driven to build security mechanisms that operate as additional security layers on top of each other. Intrusion Detection Systems (IDSs) are vital cybersecurity tools that are used to identify and monitor suspicious activities [5]. They can be used as a layered security architecture when combined with other tools such as firewalls and anti-virus software [8]. Intrusion detection systems have been extensively studied since Denning's seminal work [21], as noted in [22]. Over the years, technological advancements and evolving market demands have driven IDSs to operate in real-time, processing high volumes of traffic data while adapting to the constant evolution of attack patterns. At the same time, IDS must minimize the use of computing and storage resources to maintain efficiency. In this section, we will explore the

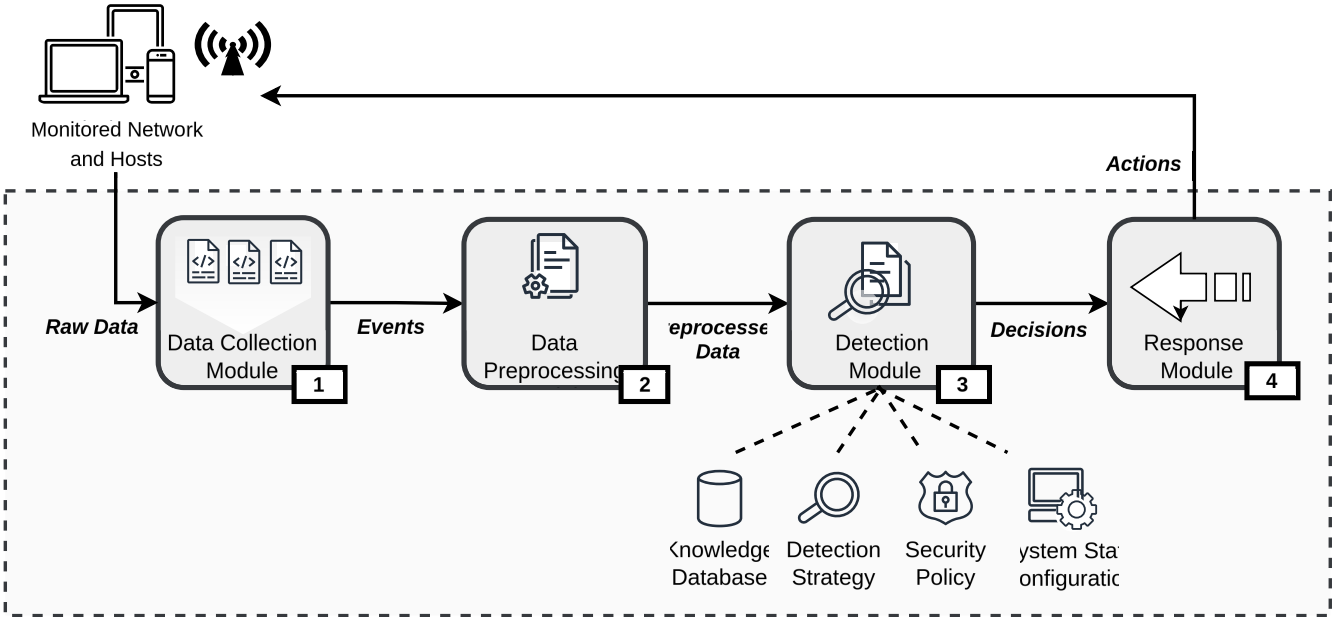

FIGURE 4. Pipeline of intrusion detection system modules adapted from [23], including 1) Data collection module, 2) Data pre-processing module, 3) Detection module and 4) Response module described in V-A.

definition, architecture, and detection engine of an IDS in detail.

A. DEFINITION

An Intrusion Detection System (IDS) audits the host system or the network to detect events that jeopardize security policies in computer networks [23]. Its primary functions are to monitor hosts and networks, evaluate computer system activity, produce warnings, and respond to suspicious behavior. The basic architecture of an IDS, as shown in Figure 4, consists of: 1) a data collection module, 2) a pre-processing module, 3) a detection engine, 4) and a response module.

The modules are organized in a pipeline architecture as follows:

1) First, the data collection module gathers and aggregates data from the monitored network.
2) Next, all data presenting a suspicious pattern must be sent to the pre-processing module for treatment.
3) Then, a set of specific features must be identified and immediately transmitted to the detection engine to help it decide on the nature of the input data stream. This decision is based on the knowledge database of the detection engine, its detection strategy, and the configurations and security policies defined by the administrator.
4) Finally, the response module turns the decision into an action. The action could be a simple alert sent to the administrator or a more sophisticated response adapted to the detected attack, such as logical isolation of malicious components from the rest of the network. In the latter case, the IDS becomes an Intrusion Prevention System (IPS) because it actively participates in blocking attacks.

Among the four modules, the intrusion detection engine and its detection strategy serve as the core components driving the functionality of an IDS [23]. However, we must not underestimate the importance of securing all the four modules because attackers never fail to target all of them. The operating systems and applications of all components must be up-to-date, and all software-based components must be protected against threats [8].

B. TYPES

Various IDS taxonomies exist in the literature, some based on data sources, others on detection strategies and others on response type [24]. Concerning data sources, IDS collects data from two main sources: network traffic and host system logs, however, it can also combine both data sources in a hybrid manner to gain more visibility over the monitored zone. Hence, IDSs are categorized into three main categories: host-based IDS, network-based IDS and hybrid IDS. This is the most popular taxonomy in the literature, therefore, it is the one we adopt further in this paper. From the perspective of detection methods, IDS systems are categorized into two main categories: signature-based IDS and anomaly-based IDS. Signature-based IDS compares input traffic data to known attack patterns or signatures that match malicious cyberattacks [4]. An anomaly-based IDS establishes a baseline by learning patterns and behaviors of normal data in order to predict the nature of new network packets. Lastly, IDSs respond to attacks in a re-active manner (as a remedy after disease) or a pro-active manner (preventing the system from attacks before the occurrence of any threat).

Each of these categories offers fundamentally different information gathering, recording, detection and prevention capabilities [8].

1) HOST-BASED IDS (HIDS)

A host-based IDS monitors data from the host system in which it is embedded only. The analysis of information such as: network packets captured crossing the host, CPU usage, RAM usage, storage disk usage, temperature and access to system files, can be an accurate indicator of system condition [23]. Most HIDS have detection software known as agents installed on hosts. Each one of these agents monitors activity in a single host, then forwards data to management servers that can use database servers to centralize monitoring and management [8].

2) NETWORK-BASED IDS (NIDS)

A network-based IDS analyzes packets that transit through the network. These packets include several features specific to network protocols [23]. NIDS typically examine network traffic for patterns or anomalies that might reveal an intrusion. They are often deployed on access nodes, border routers, switches or controllers. Most NIDSs are independent of the operating system (OS), hence they can be deployed in various OS scenarios.

3) HYBRID IDS

Hybrid IDSs, bring together NIDS and HIDS. Some detectors operate at the host level, representing an ideal approach for detecting attacks with a limited impact on a single machine. However, some attacks, including DDoS attacks, can thoroughly saturate the targeted system. In some cases, saturation can occur at the network entry point; the reason why a detection at the network level is required. Therefore, A new need arose, and the researchers proposed combining the two sources of data at system and network level to establish more efficient detectors [19].

In this study, we focus on NIDS since we cover IDSs specifically tailored for 5G/Wi-Fi networks. The advantage of deploying a NIDS is that it can detect attacks based only on network packets. This can be achieved by analyzing various network protocols on different hosts at the same time. However, some challenges are still to be overcome. In fact, deploying such systems requires additional and efficient hardware to analyze high-speed network traffic [4].

C. ARCHITECTURES

IDS architecture refers to the structural design and organization of components used to detect and respond to unauthorized access or malicious activities within a network or system. The architecture determines how data is collected, analyzed, and acted upon, shaping the system's performance, scalability, and effectiveness. IDS architectures can be categorized into centralized, decentralized, or hierarchical models, each offering unique benefits and challenges based on the environment and security requirements.

1) CENTRALIZED IDS

A centralized IDS collects and analyzes data from all monitored systems in a central location. This architecture simplifies management, provides a unified view of security events, and facilitates the correlation of information across the network. Continuous data transmission to a single network point introduces a single point of failure (SPOF) and can become a bottleneck under heavy traffic conditions. A potential solution to this problem is to determine a threshold for limiting transmissions between monitored stations and the detection system, minimizing the number of packets sent for analysis while maximizing detection accuracy. However, despite these optimizations, this architecture may still struggle with scalability as network size and traffic grow.

2) DISTRIBUTED IDS

Decentralized IDSs distribute detection and analysis processes across multiple nodes or agents, which operate independently or in coordination, enhancing scalability and fault tolerance and allowing rapid local response to threats. Such approaches can complicate management and require robust communication protocols to prevent bottlenecks or delays in threat detection.

When operating independently, each node or agent monitors its assigned segment of the network or system, analyzing data locally and responding to threats without relying on other nodes. This approach reduces communication overhead and ensures rapid response times for local threats. However, it may struggle to detect complex attacks that span multiple network segments and faces challenges with scalability as the network grows in size and complexity. A potential solution is to develop hierarchical IDSs that integrate various components and methodologies into a cohesive, multi-layered system. This design is unique in that it layers different detection mechanisms to monitor attacks at varying levels. This can be likened to a multi-level verification process, where each layer addresses specific threats and collectively enhances the system's overall robustness without apparent communication between the nodes. Although this approach can address some limitations, it may also introduce scalability issues as more layers and nodes are added to the system. To mitigate these challenges, a preliminary stage of analysis and planning is crucial to determine which type of attack should be addressed at each level, ensuring that the design remains efficient and scalable.

On the other hand, when working in coordination, the nodes share information and work collaboratively to detect and respond to threats. This allows the system to identify broader attack patterns and provides a more holistic view of the security landscape. However, coordination requires effective communication protocols and increases complexity and latency. Federated Learning (FL) has been proposed as a new paradigm for detection by coordination. Federated learning aims to carry out efficient learning among multiple participants or computing nodes without sharing local data, thus ensuring information security, personal data privacy,

and legal compliance. Federated learning algorithms can be classified according to the data structure or the cooperation mode. According to data structure, federated learning can be divided into three categories: 1) horizontal federated learning, which is applicable to scenarios where two datasets are different in samples and the same in feature space; 2) vertical federated learning, which is applicable to scenarios where two datasets are the same in samples but different in feature space; 3) federated transfer learning, which is applicable to scenarios where two datasets are different not only in samples but also in feature space [25]. According to the cooperation modes, they are classified into two approaches: centralized and distributed. In the centralized learning approach, multiple users collaboratively train a shared model by exchanging model parameters with a cloud server. Consequently, each user collaborates with others to train an intrusion detection model by only exchanging model parameters with the cloud server. Then, users use the obtained intrusion detection model to monitor attacks locally and trigger the alarm in time. Since all participants can directly upload their local model to the cloud server, this can cause a high communication overhead to the server and consume a lot of communication resources as the number of participants increases [26]. In the distributed approach, all nodes cooperatively learn a shared global model while keeping the training data at each node locally. This approach is considered the most suitable learning algorithm that ensures privacy and guarantees a low communication overhead at each cooperative node. However, it is more vulnerable to poisoning and Byzantine attacks. These attacks are carried out to alter the behavior of the models and result in false predictions [27].

VI. EXISTING FRAMEWORK FOR WIRELESS ACCESS NETWORKS IDS DESIGN

Connectivity within enterprise, industrial, transportation and mission-critical networks presents a major challenge due to their size, characteristics, and requirements in terms of latency, bandwidth, resource consumption, and security. The advent of 5G promised to solve many of these problems, especially with the proposition of coexistence with non-3GPP systems and Wi-Fi in particular. As cellular and wireless networks evolve and new security breaches emerge, there is a clear need to design and develop customized IDS solutions that can respond to security incidents accurately while meeting performance requirements for latency, bandwidth, resource consumption, and throughput in real time. The central element to achieve this is the intrusion detection engine, which serves as the most essential element of an IDS [23]. Designing such a system requires making informed decisions about datasets, attributes, detection strategies, and performance metrics.

A. DATASETS

The data collection process is of paramount importance in the design of an intrusion detection system. In fact, data analysis reveals abnormal behavior and provides relevant indicators that can help design intrusion detection systems. In addition, the quality of the data has a direct impact on the performance of detection algorithms, especially learning-based algorithms (we will dive into these methods in Section VI-C2). This data can be sourced from either operational real-world dedicated networks with limited access or temporary networks and testbeds that are specifically deployed for dataset collection. As a result, these datasets are publicly available to the research community to facilitate the reproducibility of experimentation results and provide useful benchmarks to compare related work.

The first widely known dataset for intrusion detection is the DARPA dataset [28]. Due to the continued prevalence of attackers and evildoers, other datasets have been proposed in order to counter new threats, for example: KDD Cup 99 [29], NSL KDD [30], CAIDA [31], CICIDS2017 [32], and CTU-13 [33]. Due to the drastic technological advances that have occurred since these datasets were compiled, most of them are outdated for modern networks. There has been a lack of data sets in the field of wireless and mobile intrusion detection systems, where the oldest data sets were about IDS in general and have little applicability to research on 5G and Wi-Fi network security. Moreover, Mobile Network Operators (MNO) are usually reluctant to publicly share data from their live network traffic due to privacy issues and the potential threat of exposing network vulnerabilities to external parties [34]. Hence, the field is dominated by false or half-true assumptions that can lead to the corresponding detectors giving the impression or illusion of high efficiency with no real impact when it comes to modern and futuristic 5G&B or Wi-Fi networks [16].

To address these problems, researchers are making further improvements in this regard. The Aegean Wi-Fi Intrusion Dataset (AWID) was proposed as a Wi-Fi network intrusion dataset. AWID has been enhanced and extended to AWID3 [15] by capturing and examining the traces of cyberattacks sent into the IEEE 802.1X extensible authentication protocol (EAP) environment. It concentrates on WPA2 enterprise networks. It includes IEEE 802.11 specific attacks of: Deauthentication, Disassociation, (Re)Association and Rogue Access Point, modern attacks like Krack and Kr00k and multi-layer attacks like DDoS and Website Spoofing. The 5G-NIDD dataset is the latest intrusion dataset released by [34]. This dataset was derived from a real 5G test network. It was generated using a fully functional 5G network created for 5G testing purposes, which closely resembles a real network. The authors suggest that 5G-NIDD contains unique features specific to 5G network flows. However, upon closer examination, the dataset appears to primarily include DoS and port scan attacks characterized by generic transport layer features, which are not inherently specific to 5G technology.

B. FEATURE SELECTION

The feature selection process consists in selecting the most relevant, informative and smallest possible subset of features

TABLE 1. Summary of existing intrusion detection datasets.

Dataset	Year	Description	Included Attacks	#features	#classes	#samples	% malicious samples
NSL-KDD [30]	1999	A variant of the KDD99 dataset that was collected as part of the International Knowledge Discovery and Data Mining Tools Competition. NSL-KDD was refined to address the issues of redundancy and imbalance in the original dataset.	• Denial of Service (DoS) • User to Root (U2R) • Remote to Local (R2L) • Probing Scanning	40	23	185.559	50.04%
AWID2 [35]	2015	A comprehensive collection of wireless network traffic designed by Aegean University researchers to enhance wireless network security through comprehensive intrusion detection datasets. AWID2 focuses on Wired Equivalent Privacy (WEP), Protected Access (WPA) and WPA2-Personal.	• Denial of Service (DoS) • Probe Attacks • Authentication Attacks • Evil Twin • Man-in-the-Middle (MitM) • Session Hijacking • Unauthorized Access	155	24	9.311.631	8.9%
CICIDS2017 [32]	2017	A public intrusion detection dataset containing five days normal and attacks traffic data published by the Canadian Institute of Cybersecurity [36].	• Botnets • Brute Force • DoS • DDoS • Infiltration • Port Scan • Web Attack	83	15	2.830.540	16.65%
CICIDS2018 [37]	2018	An improved and expanded version of the CICIDS2017 dataset that contains realistic network traffic captured in a simulated enterprise environment gathered to serve purposes in the evaluation and development of intrusion detection systems (IDS).	• Brute Force • Denial of Service (DoS) • Distributed Denial of Service (DDoS) • Heartbleed • Botnet • Infiltration • Web Attacks • Port Scan • IP Sweep	80	10	16.232.943	16.94%
CTU-13 [33]	2018	A botnet attacks dataset collected from a real and large network. It comprises thirteen scenarios with different numbers of compromised computers and seven botnet attack families.	• Botnet	15	3	19.976.700	1.45%
AWID3 [15]	2021	The University of the Aegean's AWID3 dataset is collected in a physical lab that consisted of 16 different physical devices and virtual machines running multiple operating systems. AWID3 is the newer version of AWID2, concentrating on WPA2-Enterprise and Protected Management Frames (PMF).	• Deauthentication • Disassociation • (Re)Association • Rogue AP • Krack • Kr00k • Botnets • Malware • SQL Injection • SSDP Amplification • Evil Twin • Website Spoofing	255	13	35.624.433	18.81%
5G-NIDD [34]	2022	A publicly available, newly released and large intrusion detection dataset derived from a real 5G test network.	• Denial of Service (DoS) • Port Scan	51	9	1215890	60.70%

that can efficiently identify all occurring incidents. The selected subset should contain features with: minimum redundancy and noise, as well as maximum relevance [23]. As a result, feature selection minimizes the consequences of the curse of dimensionality.[1] Moreover, it simplifies the representation pattern and interpretation of the data for experts, thus improving the generalization capacity of the detection algorithm. Most importantly, feature selection reduces processing time for better responsiveness. Together, these advantages contribute to optimizing all aspects of IDS design. Feature Selection methods can be categorized into three main categories:

1) Filter methods drop features according to how they are correlated to the output class.

[1]The curse of dimensionality generally appears if the number of features in the dataset is greater than or equal to 100.

2) Wrapper methods split data into random subsets to train an algorithm. Based on the performance of the latter, features are added or subtracted, and the algorithm reiterates again. The goal is to obtain a compromise between the minimum number of features to be retained and the performance of the algorithm.
3) Intrinsic methods are a combination of both filter and wrapper methods. The correlations between features and the output classes are first computed, and the selected features are the ones that have a strong correlation to the output class. The final subset is selected according to the wrapper algorithm.

Unfortunately, the feature selection phase is often neglected in the literature. Most works provide little or no detail on the features selected for detection. However, this started to change recently. Chatzoglou et al. [16] pointed out this problem for the first time in the context of Wi-Fi networks, using the AWID3 dataset. These authors determined, using their expertise and knowledge and with reference to the relevant literature, the smallest possible set of features to counter IEEE 802.11 MAC layer attacks. The resulting set of 16 features can be used as a solid reference to the creation of robust and lightweight IDS. Following this, the same authors have taken their work a step further by experimenting the competence of 802.11-specific and non-802.11-specific features when used separately and in tandem in detecting application layer attacks. Since data encapsulated in Wi-Fi frames are encrypted and anonymized, the detection of application layer attacks presents an additional challenge. However, in the scope of this study, the term 'non-802.11' does not pertain to application layer features. Their final set of features is of size 17 mostly mainly associated with the transport layer. Sassi et al. [23] designed a wrapper feature selection method using the Binary Harris Hawk Optimization Encirclement Attack Synergy (BHHO-EAS) meta-heuristic. They are the first to have applied a feature selection process using meta-heuristic optimization on the AWID3 dataset. The method produced a subset of eight features related to the IEEE 802.11 MAC layer. The authors compared their approach with the work of Chatzoglou et al. [16], reporting improved performance metrics. However, it is important to note that Sassi et al. balanced their dataset through sub-sampling, ensuring that all classes were evenly distributed. In contrast, Chatzoglou et al. [16] retained an unbalanced dataset to better reflect the ground truth, where normal packets significantly outnumber malicious ones. This difference in dataset preparation can influence the reported outcomes, as data resampling and balancing can directly affect algorithm performance. Thus, while Sassi et al.'s results are notable, the comparison may not fully account for these methodological differences.

After reviewing several works on the topic, we noticed that researchers are reluctant in applying filter methods to the intrusion detection problem. Optimization and ensemble techniques of feature selection such as Principal Component Analysis (PCA), Factorial Correspondence Analysis (FCA) or Analysis of Variance (ANOVA) are particularly designed for this type of problems, where the set of features is considered as a highly dimensional vector space that needs to be reduced to a minimum while retaining the dimensions that best explain the relationships between features. These methods have proved their efficiency in dealing with the curse of dimensionality and may be an interesting area of research for future work. Feature selection is an important step in the implementation of IDS, because it ensures that the most significant features are proposed for accurate detection of targeted attacks, and that the behavior of the algorithm is better understood. It has also been shown that dimension reduction methods can significantly reduce the computational costs associated with software and hardware resources.

C. DETECTION STRATEGY

As new network use cases are emerging and large volumes of data are expected to transit through cellular and wireless networks, manufacturers focus mainly on increasing transmission rates. This improvement makes the task of real-time attack detection harder for traditional security mechanisms that rely on raw packet inspection and analysis. To address this problem, many hardware and software solutions have been proposed, e.g. advanced parallelization techniques and hardware accelerators. It appears nonetheless that these solutions are not sufficient in the long run, given the constant evolution of networks with even higher transmission speeds. As a result, there is an ever-increasing need to integrate algorithms with precise detection capabilities and rapid data processing procedures for immediate and real-time analysis of threats [6], [7]. Moreover, ever since attackers developed advanced techniques to threaten computer networks security, IDSs are forced to evolve toward new detection approaches with innovative AI-based techniques capable of predicting unknown zero-day attacks. In this section we will present the detection algorithms, also known as detection strategy (refer to figure V) that are commonly used in the literature.

1) CONVENTIONAL METHODS

Conventional detection methods, often referred to as traditional approaches, are based on predefined rules, heuristics, or signature matching techniques [18]. These methods rely on prior knowledge of known threats, making them effective for detecting well-documented attack patterns. However, they often struggle to identify novel or sophisticated threats, as they lack adaptability and the ability to learn from evolving attack vectors. Despite these limitations, conventional methods remain widely used due to their simplicity, efficiency, and proven track record in certain scenarios. In this work, we distinguish between the two types of conventional detection methods: signature-based and rule-based approaches. While some studies use the term 'signature' to refer to both categories collectively,

we deliberately avoid this generalization for the sake of clarity.

a: SIGNATURE-BASED ALGORITHMS

Signature-based detection techniques, use a signature database describing known attack patterns. The database thus, becomes the most critical component of the IDS and must regularly be updated with new attack signatures. If there is any missing signature in the database, the system may fail to detect that as an attack and hence, the security of the whole network is compromised. As the signatures are uniquely stored in the database, the algorithm can accurately categorize all attacks based on their unique signature. However, these algorithms fail to detect unknown zero-day attacks which will most likely invade 5G networks in future years. Another limitation occurs for use cases with limited memory resources, like IoT, the signature database is suspected to saturate the memory in the medium term or even in the short term due to regular updates. Furthermore, signature-based IDSs perform poorly when the attack spans across multiple numbers of packets as only individual packets are compared to the signatures in the database. Since real-time networks have to respond to applications demanding ultra-low latencies, this packet-per-packet comparison appears to be costly in time and resource. Moreover, this conventional reactive security approach, where the resolution action starts after the attack is detected, studied, and analyzed, requires a preliminary phase of signature identification where the attack succeeds in compromising one or more networks beforehand. Therefore, a paradigm of proactive, self-aware and self-adaptive intelligent security systems is a must [4], [23], [34], [38].

b: RULE-BASED ALGORITHMS

Rule-based intrusion detection techniques are based on inference of patterns, attack logic, and block schemes by field experts through observation and experimentation. The inferred rules are appropriately adjusted by conducting various attack tests within the testing environment, as well as utilizing publicly available data sets [17]. These techniques are conceived to respond proactively to attacks through fixed rules, which makes the classification rate of attacks by type very accurate. Countermeasures are taken according to the information obtained regarding the detected attacks from the detection systems. The better classification of the type of the attack is provided, the more efficient countermeasures will be chosen and the less those will affect the proper operation of the system or network. Moreover, if we do not detect the exact type of attack the countermeasures can have more serious consequences than the attack itself in some cases [39]. However, the static nature of these methods makes them less advantageous when dealing with zero-day attacks, which require the use of more flexible and dynamic methods. The responsiveness of these techniques depends on two main factors: 1) the ability of experts to identify new attacks, study their patterns and determine the rules, 2) the optimization of the implemented pseudo-code.

2) LEARNING-BASED METHODS

Machine learning (ML) is a field of research in which algorithms train computers to learn patterns without being explicitly programmed. Unlike signature-based algorithms, ML-based algorithms can handle high-speed network traffic in real time while responding proactively (before any attack occurs) to unknown zero-day attacks. They learn from extensive data, enabling IDS to detect even minor deviations from normal traffic that traditional rule-based and signature-based systems may miss. They can adapt to changing network conditions and attack patterns, allowing IDS to remain up-to-date without any database update or enrichment. Using machine learning algorithms to analyze network traffic, IDS can minimize false positives and reduce the workload of security analysts [4].

a: SUPERVISED LEARNING

requires the entire training set to be labeled. Hence, each feature vector corresponding to a data sample must be associated with a label representing the class to which that sample belongs. The machine learning model is then trained to infer rules and associations from these data samples. In this context, intrusion detection is formulated as a classification problem. Machine learning algorithms are highly effective at classifying large and multidimensional datasets. However, domain-specific human expertise remains valuable, as it can uncover aspects that classification algorithms cannot [4]. In this context, the researcher's main obstacle is that of building a training set with all the anomalous traffic properly labeled. Given the heavy traffic volumes typically observed in today's networks, it is almost impossible to categorize all packets correctly, and it is even harder to keep track of all the new threats that might occur in the future. In fact, the usual technique for obtaining a labeled training set consists of injecting anomalous traffic into the normal traffic stream. There are several reasons for this, such as the excessive effort needed to collect that sort of data, the level of expert knowledge that would be necessary for this analysis, or user privacy issues. In addition, when a classifier is tested in a network that is different from the one in which the training data were gathered, the detection performance drops significantly [6]. Due to all this, together with the huge amount of data expected in 5G and Beyond networks, it is necessary to make the training process as independent as possible from the availability of labeled anomalous data.

Examples: Decision Trees (DT), Random Forests (RF), Multiple Layer Perceptron (MLP), Deep Neural Networks (DNN), Convolutional Neural Networks (CNN).

b: UNSUPERVISED LEARNING

Unsupervised Learning or clustering techniques are used when the provided data is unlabeled and the output classes are not known. These techniques automatically classify data

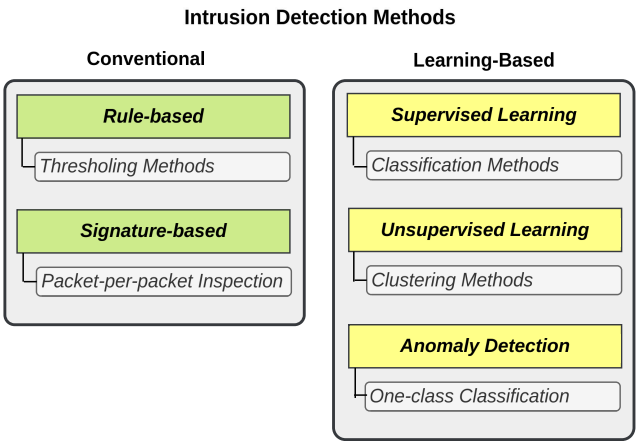

FIGURE 5. Taxonomy of intrusion detection strategies including conventional and learning-based methods. Conventional methods include rule-based methods that are based on thresholding and signature-based that rely on a signature database and packet-per-packet inspection. Learning-based methods are categorized into supervised, unsupervised and anomaly detection methods.

into groups using only their internal properties by carefully selecting features that exhibit completely different behavior. Expert knowledge is then needed to decide which group contains which type of data. These approaches offer a clear advantage in terms of independence from the labeled data but are more challenging to design.

Examples: K-means, K-Nearest Neighbors (KNN), Auto-Encoders (AE).

c: ANOMALY DETECTION

Anomaly detection is considering as anomalous all network traffic that does not fit to the normal class. It can be considered as a two-class classification problem, hence a special case of supervised classification or as a clustering problem. An anomaly can be defined as a pattern that rarely appears in the network and does not conform to the expected normal behavior [7]. An anomaly-based intrusion detection algorithm establishes a baseline by learning the patterns and behaviors of normal traffic. Then, it labels any traffic that deviates outside a predetermined tolerance level from the baseline as malicious, without specifying the type of maliciousness. Although this detection method cannot identify attacks by type, it has the major advantage of detecting unknown zero-day attacks while being scalable [23]. However, this system requires continuous baseline training to reduce detection errors due to the imprecise boundary between normal and anomalous data [4]. Although a lot of work has been done in this field to produce universal datasets, there are still deficiencies in datasets that should theoretically model all normal behaviors.

D. EVALUATION METRICS

Before presenting the evaluation metrics, let us introduce some common notations:

- P: designates positive, that is, an element that belongs to the class to be detected. In our case, it refers to the number of malicious packets.
- N: designates negative, that is, an element that belongs to the opposite class. In our case, this is the number of normal packets.
- True positives (TP), True negatives (TN): the number of correct predictions of the positive and negative classes, respectively (prediction and actual values are both negative) [8].
- False positives (FP), false negatives (FN): these two metrics are, respectively, the number of elements that were incorrectly identified as positive and the number of elements that were incorrectly identified as negative.
- False positive rate (FPR): the ratio of negatives reported as positive to the total number of samples $FPR = \frac{FP}{N}$; This value is between [0, 1].
- True negative rate (TNR): the ratio between the correctly identified negative elements and the total number of negative elements $TNR = \frac{TN}{N}$; This value is between [0, 1].
- False negative rate (FNR): the ratio between the positive elements reported as negative and the total number of positive elements $FNR = \frac{FN}{P}$; This value is between [0, 1].

1) ACCURACY

Accuracy is the rate of correctly classified samples. In other terms, it is the ratio of correctly identified items to the total size of the test set $Acc = \frac{TP+TN}{P+N}$; This value is between [0, 1].

2) PRECISION

Precision is also named positive predictive value because it returns the ratio of relevant samples among the detected samples [8]. It is the ratio of positive elements that were correctly identified as positive to the number of all elements identified as positive $precision = \frac{TP}{TP+FP}$; This value is between [0, 1].

3) RECALL

Recall is also known as the sensitivity or true positive rate, that is the ratio of relevant samples detected as positive [8]. It is the ratio of correctly identified positive elements to the total number of positive elements $TPR = \frac{TP}{TP+FN}$; this value is between [0, 1].

4) F1-SCORE

F1-score measures the harmonic mean of precision and recall ($F1 = \frac{2 \times precision \times recall}{(precision+recall)}$); This value is between [0, 1] and the higher it is, the better the result. It is a reliable metric for evaluating unbalanced data sets.

5) CONFUSION MATRIX

The confusion matrix is the measure for a machine learning classification problem where the output can be two or

Predicted value \ Actual value	Positive	Negative
Positive	TP	FP
Negative	FN	TN

FIGURE 6. Confusion matrix represented for a two class classification showing the number of actual and predicted values for negative (normal) and positive (malicious) samples.

more classes. For a binary classification, it is a matrix with 4 different combinations of predicted and actual values as shown in Table 6. Providing excellent domain-specific indicators of system performance and responsiveness is of paramount importance. Henceforth, many researchers rely on the above-mentioned metrics as performance indicators. However, some researchers find it useful to define new metrics that can offer a balanced trade-off between FPR and FNR, performance and responsiveness, or simply metrics that can combine the performance of multiple detectors. In the case of FPR and FNR for instance, it is not possible to completely eliminate all the false positives and negatives, since reducing one causes the other to increase. Many scientists prefer to reduce the false negative rate even if the false positive rate increases [8]. However, other researchers test different variants of f1-score to achieve a certain trade-off between the rates. The same applies for performance and responsiveness measurements by searching for a trade-off between response time and accuracy.

VII. 5G-SPECIFIC IDS

In this section, we review various studies on intrusion detection within 5G networks. In Section VII-A, we detail the method configurations, highlight the best reported performance for each study, and present a consolidated summary of the findings in Table 2. In Section VII-B, we discuss the placement of detection modules within the 5G network architecture. Figure 7 illustrates the placement that is proposed in each work covered in this survey. However, since some authors do not specify the deployment details, the number of works summarized in Sections VII-A and VII-B differs. In Section VII-C, we discuss the reviewed studies in detail, highlighting key insights and lessons learned from their findings.

A. METHODS

Maimo et al. [6], [7] proposed a hierarchical intrusion detection scheme composed of two successive detection functions: Anomaly Symptom Detection (ASD) and Network Anomaly Detection (NAD). The ASD module is responsible for the early detection of abnormal symptoms between user equipments, while the NAD module provides accurate detection of RAN-associated anomaly symptoms. Although the authors gave an almost complete overview of their system, they only implemented the ASD module. They proposed a Deep Belief Network (DBN) of three hidden layers and 16, 4, 1 nodes respectively trained on inferred Transmission Control Protocol and User Datagram Protocol (TCP/UDP) features taken from network flows aggregated views of 30 and 60 seconds. To measure its speed and accuracy, they performed tests to compare different deep learning libraries while varying the feature batch size. They reported a throughput of 4.5 million processed feature vectors per second for a vector size of 256 features using the cuBLAS library.

Rezvy et al. [40] focused on exploring low latency models while maintaining high accuracy by proposing a deep auto-encoded dense neural network (DNN) framework for effective intrusion detection in 5G and IoT networks. This framework is built in two main functional stages: they first applied an auto-encoder-based unsupervised pre-training layer, then a supervised dense neural network for attack type classification. The auto-encoder facilitated an unsupervised pre-training on the data to provide compressed and less noisy representation of the input space, while the final dense neural network functioned as the supervised classifier for the experimental intrusion detection scenario.The encoder part of the auto-encoder aims to compress input data into a low-dimensional representation, and there is a decoder part that reconstructs input data based on the low-dimension representation generated by the encoder. At the end of this step, a set of compressed and robust features is built. After the auto-encoder layer, a three-layer dense neural network is trained using the first auto-encoder's output as inputs. This task sequence is re-trained in a supervised manner with the class labels and the input feature given to the classifier. However, the authors do not provide details about the selected features of the dataset, especially that the AWID dataset used to train their model is mainly composed of MAC layer records that are specific to Wi-Fi technology.

IoTDefender is a federated transfer learning-based intrusion detection system proposed by Fan et al. [25]. It is tailored for 5G-based IoT networks as it is geographically distributed, heterogeneous, and hierarchical. The general idea of the system is that every IoT endpoint transfers local traffic data to the nearest Mobile Edge Computing (MEC) platform to train client models. The models are then aggregated on a cloud security server to obtain a unified server model. The authors conducted extensive experimental analysis to prove the effectiveness, generalization capabilities, and sensitivity of the framework against several attacks. They argue that the framework is flexible and extensible to different IoT networks. However, the authors offer little detail on their feature selection process.

Mirzaee et al. [41] designed a Federated IDS (FIDS) that preserves customer privacy and provides supervisory management for the entire energy distribution network of

metering infrastructures of 5G Smart Grids (SG). The core detector of the FIDS is a five-layered DNN classifier, called FDNN (Federated DNN), which represents distributed DNN models performing under a federated system. The layers include one input, one output, and three dense layers. 70 neurons in the first dense layer, 200 in the second layer, and 20 in the last dense layer. The output includes neurons representing five output categories, four attack classes, and normal samples. They compare FDNN performance with Centralized DNN (CDNN), Support Vector Machine (SVM), K-Nearest Neighborhood (KNN) and Logistic Regression (CLR). The proposed method has successfully achieved an accuracy rate of approximately 99.55% by only 60 features out of 122 (extended number of features after encoding) using recursive feature elimination. The simulation results for a real-time dataset demonstrate a reasonable improvement of the proposed federated DNN model compared to state-of-the-art algorithms.

Sun et al. [26] proposed a hierarchical federated learning intrusion detection system (HFed-IDS) for a 5G Advanced Metering Infrastructure (AMI). They present a transformer intrusion detection model (Transformer-IDM) composed of two feature extraction layers (each layer consists of a convolutional layer and a pooling layer), a column embedding layer, a stack of two transformer layers (each transformer layer is composed of eight multi-head self-attention layer and a feed-forward layer) and a multi-layer perceptron. In order to prove its effectiveness, the authors tested the Transformer-IDM with and without federated learning. They compare the model with machine learning models of support vector machine (SVM), linear regression, K-nearest neighbors (KNN), multinomial Naive Bayes (MultinomialNB) in centralized mode. Then, they repeat the comparison process with deep neural networks of 3 and 16 hidden layers and Gated recurrent units (GRU) with Multiple Layer Perceptron (MLP) in centralized and federated modes.

Nour [4] introduced the smart zero-trust module (referred to as S-ZTA in 7) based on ML. The module consists of three layers that are mapped to the Zero-Trust analytics layer of the NIST Zero-Trust framework NIST SP 800-207 (2020): the Policy Engine (PE), the Policy Administrator (PA), and the Policy Enforcement Point data layer (PEP). PE, is realized by the Zero-Trust Analytics function through implementing machine learning-supervised classification methods to determine whether incoming traffic is malicious or benign. PA control layer then uses this classification to decide whether or not to drop the packet. The PA layer is closely linked to the PE and relies on its decision to determine whether to allow or deny a session. PEP executes the decisions the layers above make. Its main function is to manage, monitor, and terminate connections between IoT devices and requested resources if traffic is classified as malicious. The PEP function is achieved by controlling the software and hardware of the Edge infrastructure. It is worth noting that without the smart Zero-Trust module the classification function alone will not be able to drop the malicious traffic and it will need human intervention for that to happen. Seven supervised ML models were developed and evaluated to classify several types of attacks along with ANOVA, PCA and Linear Regression-based feature selection. These models include bagging, boosting, and neural networks. The Decision Tree and Extreme Gradient Boosting (XGB) classifiers outperform the other models, with higher accuracy, lower false alarm rate, and shorter classification time per record. They reported an f1-score of 0.99 and an inference time of 0.02ms.

Sedjelmaci and Boualouache [27] presented a hierarchical two-layer FL-based architecture to detect external network slicing attacks that target wireless communication nodes and internal network slicing attacks that target edge and core network functions. The proposed IDS consists of three attack defense systems: First-Attacks Defense System (F-ADS), Second-Attacks Defense System (S-ADS), and Third-Attacks Defense System (T-ADS). The first FL layer consists of F-ADS as FL clients and S-ADS as FL servers, while the second layer consists of S-ADS as FL clients and T-ADS as an FL server to aggregate the global training model. The models are deep neural networks composed of two hidden layers of 85, 42 nodes, respectively. In addition, they formulate a new security model based on mean-field games to detect poisoning attacks. They evaluate the detection of their defense systems in training to detect DDoS and Botnet 5GB slicing attacks and in deployment to detect the same attacks, under poisoning attacks. Time Overhead (TO) is defined as the time required for defense systems to detect DDoS, botnet, and poisoning attacks accurately. They reported a TO of 800ms.

Lilhore et al. [42] proposed a hybrid model using an improved light-weight CNN architecture (MobileNetV3-SVM) and transfer learning (TL) for intrusion detection in 5G networks. They adapt the architecture of MobileNetV3 to produce a light-weight CNN which performs well in resource-constrained environments since pre-training weights are not particularly heavy. Next, they replaced the SoftMax classifier normally used in CNNs with a Support Vector Machine (SVM) classifier to strengthen IDS resilience. The authors transform all network flow patterns that occur within a defined time through a two-dimensional structure image. The image consists of two dimensions: one indicates the different measures of the network flow (known as features), while the additional dimension indicates the changing values over time. In addition, to address the issue of limited labeled data in dynamic and constantly changing systems, they use a transfer learning strategy. As a result, this framework is efficiently utilized for IoT and 5G connection operations, including classifying and detecting objects and intrusions. It achieves a balance between high performance and efficient computation. However, it is crucial to consider the computational cost of using image conversion techniques, particularly when dealing with large data sets.

TABLE 2. Comparative summary of surveyed IDSs for 5G networks.

Reference	Year	Dataset	Feature Selection	Number of features	Algorithm	Performance
[6], [7]	2018	CTU-13	Expert-driven	144	Deep Belief Networks (DBN)	F1-score = 89.40%
[40]	2019	AWID-CLS-R	Auto-encoder	36	Deep Neural Network (DNN)	Accuracy = 99.9%
[25]	2020	CICIDS2017, NSL-KDD, and 3 private datasets	Not specified	Not reported	Convolutional Neural Networks (CNN)	Accuracy = 91.93%
[41]	2021	NSL-KDD	Recursive Feature Elimination (RFE)	60	Deep Neural Network (DNN)	Accuracy = 99.5%
[26]	2022	NSL-KDD	Not applied	40	Transformer-IDM	Accuracy = 99.49%
[4]	2023	5G-NIDD	Logistic Regression-based Feature Importance combined with PCA	20	Decision Trees	Accuracy = 0.99
[27]	2023	CICIDS2018	Not applied	85	Deep Neural Network	F1-score = 96%
[42]	2024	CICIDS2017	Decision Trees-based feature importance	78	MobileNetV3-SVM	F1-score = 99.09%
[43]	2024	NSL-KDD	Not applied	40	Multiple Layer Perceptron (MLP)	Accuracy = 90%

Djaidja et al. [43] proposed an intrusion detection system to secure 5G network slices and detect potential attacks using federated learning. They opted for a Multi-Layer Perceptron (MLP) algorithm of 8 layers and 41-128-256-128-128-64-32-23 nodes per layer, which is appropriate for their specific context, where they treat each network flow as a single data point. In their experiments, the authors thoroughly evaluate the latest state-of-the-art FL algorithms, by addressing the challenge of weight divergence in heterogeneous networks. They compare these FL models to local and centralized Deep Learning (DL) models. They find that SCAFFOLD outperforms all other FL algorithms and ensures stable learning loss convergence, a promising finding that strengthens the case for using FL in IDS development. However, none of the FL models could achieve the same performance as the centralized model in Non-IID scenarios. The experimental study reveals that FL can be viewed as a "curse" because the exchanging models involve communication overhead but do not improve detection accuracy and performance compared to locally trained models. Fortunately, state-of-the-art approaches could overcome convergence problems in Non-IID data, a "blessing" for future FL-based models to enable effective distributed learning.

B. MODULES AND ARCHITECTURES

Maimo et al. [6], [7] leverage the Network Function Virtualization (NFV) paradigm by introducing two detection modules to be deployed as two distinct Virtual Network Functions (VNF). The proposed ASD and NAD modules are located in the 5G RAN and the core network, respectively. The authors argue that the proposed architecture is easily flexible, because it allows the scaling of new ASD modules in the RAN Cluster if network traffic increases. Another key advantage of this architecture is its extensibility, since the symptom detection, which is the most expensive analysis process, is distributed among RANs, while the anomaly detection is centralized in the core network, only requiring symptoms as input.

IoTDefender is a federated learning-based IDS that is distributed across multiple Mobile Edge Computing (MEC) platforms and aggregated on a central cloud server. To prove the effectiveness of their architecture, fan et al. [25] simulated 4 MEC platforms as 4 clients using 3 private datasets with the NSL-KDD dataset. For model initialization, they simulated a centralized server using the CIC-IDS-2017 dataset. The authors used the federated averaging (FedAvg) aggregation function for parameter aggregation.

Mirzaee et al. [41] proposed a system distributed on two layers: the participant layer and the server layer. Users act as participant side located at the Home Area Network (HAN) and the data concentrator at the Neighbor Area Network (NAN) layer plays the server side role. The participant layer includes households, and each household is equipped with a Local IDS (L-IDS), which monitors traffic and alarms the surveillance center in the event of any anomaly. After the local training phase, the local models of each user in a lower layer are aggregated by data aggregators. The NAN server in the upper layer located on the gNodeB, after averaging the coefficients, generates a global model and broadcasts the global parameters with each client to update their local models. The FIDS model includes 16 participants distributed in a neighborhood, each participant represents a household, and the neighborhood concentrator is responsible for aggregating information from the corresponding area. The NSL-KDD training dataset is split randomly among participants to build the required distributed training dataset.

Sun et al. [26] proposed an IDS that is distributed across two levels: the global transformer intrusion detection model (Transformer-IDM) is hosted on a cloud server, and the local models are hosted on smart metering platforms. The particularity of this proposal is that the trained models of the participants are uploaded to the base station that is assisted

by a performing edge server that aggregates the received models at this level to reduce the number of models that need to be transmitted to the cloud server. In this work, 10 clients (smart meters) were simulated. They are divided into three clusters of 3, 3 and 4 smart meters with Independent and Identically Distributed (IID) data. For the aggregation function, they introduce a custom Heterogeneous Federated IDS (HFed-IDS) function. Thanks to that, the IDS not only has a higher test accuracy but also requires fewer transmission costs than the other models in the up-link (from smart meters to a base station) and in the 5G core network as well. The size of transmitted data in the core network is 20/25MB per 100 iterations, where each transmitted model parameter is encoded and quantized into 32 bits.

Nour [4] proposed an ML-based IDS (ML-IDS) with a smart zero trust architecture (ZTA) to classify malicious network traffic in real time while operating in a power-constrained 5G RAN Edge layer. The system monitors the traffic of end-user IoT devices via the Edge layer before sending it to the 5G core network for further processing. This means that IoT devices must undergo authorization, authentication, and continuous validation of their security posture before accessing applications and data. This architecture eliminates the differentiation between internal and external networks, eliminating the idea of implicit trust for networked IoT devices. Authors claim that the proposed solution is suitable for processing-constrained environments like 5G IoT devices connected to Edge layers.

Sedjelmaci and Boualouache [27] proposed a hierarchical IDS of three attack defense systems: the first attack defense system (F-ADS), the second attack defense system (S-ADS), and the third attack defense system (T-ADS) located in gNodeBs, edge servers, and the Access and Mobility Management Function (AMF), respectively. F-ADS monitors the link between the user equipment and gNodeB to detect malicious user equipment that targets the wireless communication gNodeB. S-ADS monitors the communication link between gNodeB and the edge server to detect malicious gNodeBs. T-ADS protects the AMF and legitimate edge servers from malicious edge servers. To test their proposal, the authors set up two configurations: the first configuration consists of one T-ADS (layer 2) and two S-ADSs (layer 1) with three F-ADS each; the second configuration consists of one T-ADS and three S-ADSs with five F-ADS each.

Djaidja et al. [43] proposed an IDS that comprises local models operating at the Network Data Analytics Function (NWDAF) level of each slice along with a global model that aggregates the parameters of the local ones deployed on a specialized Coordinator in the 5G Core Network. The NWDAF is responsible for collecting traffic from the User Plan Function (UPF), and transforming these network packets into network flows. Local training is done at the NWDAF level by analyzing the generated flows, and the classification result is communicated to the Security Network Function (SecurityVNF), in order to devise the appropriate policy, for example, in the event of an attack, some slices must be isolated. The process is repeated each time, and SecurityVNFs will continue to request the NWDAF to classify future network traffic. The authors chose to deploy local models on NWDAF because it is specially designed to support the deployment of data analytics pipelines in the 5G network. Since the authors opted for the NSLKDD dataset, they included only 8 clients to maintain the dataset size representative. They simulated a Non-IID scenario which is realistic, since the assumption that slices undergo the same type of attacks is not valid. So, in this scenario, they assume that normal traffic is collected more or less with the same distribution across slices. However, for attacks, they assume that the traces of some attacks are only available in one slice and not in others. The SCAFFOLD aggregation function reaches 90% accuracy with a small confidence interval and outperforms both FedAvg and FedProx.

C. DISCUSSION

1) PREDICTION TIME MEASUREMENT

The fifth generation of cellular networks (5G) is now recognized for its ultra-low latency, achieving levels below one millisecond, thus meeting the demands of critical and interactive applications. However, this low latency also means that intrusion detection systems must be fast enough to keep up with the high-speed data transfer rates of 5G networks. If the intrusion detection system is too slow, it can become a bottleneck in the network, causing delays and reducing the overall data transfer speed. Therefore, intrusion detection systems must be designed to be fast and efficient enough to operate seamlessly on 5G networks and ensure that security risks are identified and addressed in time [4]. Among all the works reviewed, these are the only ones that have specifically addressed this issue:

- The authors in [6] conducted a set of experiments on their system to finally achieve a throughput of 4.5 million processed feature vectors per second for a vector size of 256 features.
- In [4], the authors provided the inference time of the machine learning algorithms implemented (also known as the prediction time in online mode). The lightest algorithm prediction time is 0.02ms.
- In [27], they measured the response time for distributed systems (Time Overhead (TO)) as the average response time of all local models. The authors report a TO of 800ms.
- [41] measured the end-to-end time duration per each communication round per different feature numbers. With 60 features, the end-to-end time duration is 129.97 seconds.

2) MOBILE EDGE COMPUTING BRINGS COMPUTATIONS CLOSER TO THE USER

The expected growth in data volumes of 5G networks requires an equivalent improvement in network performance. However, we can clearly see that many IDS-related computations

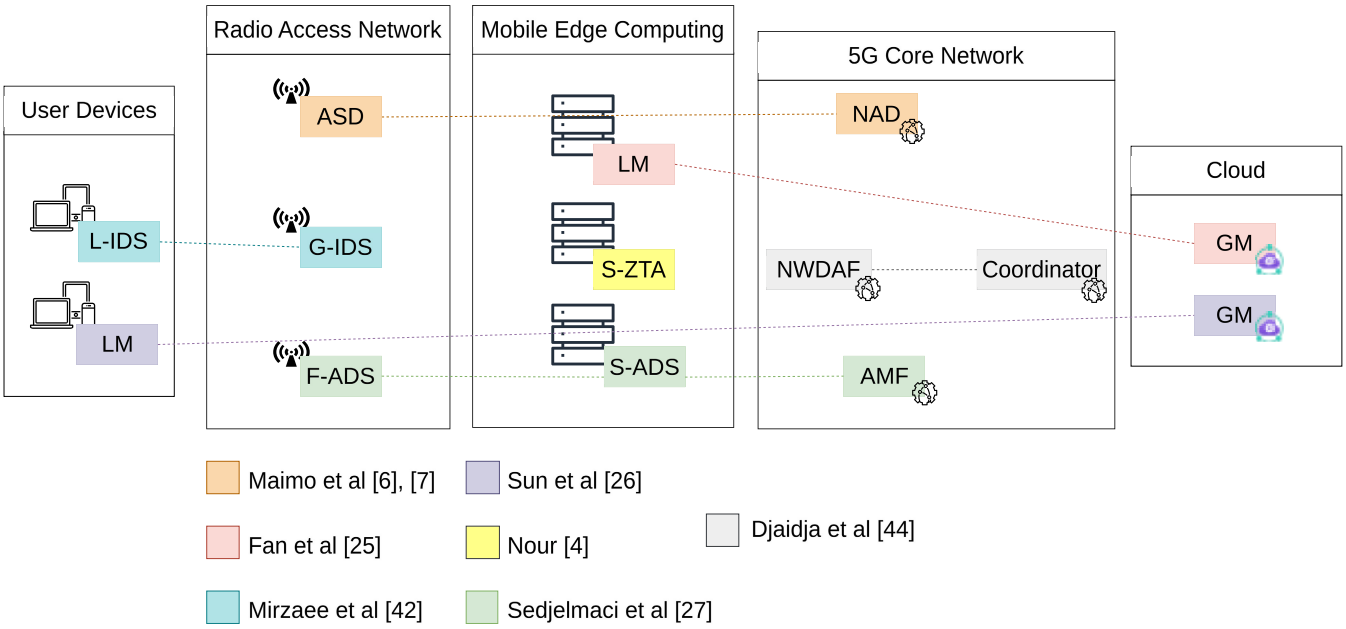

FIGURE 7. Placement of all the surveyed IDS modules in a generic 5G architecture including user devices domain, radio access network domain, mobile edge computing domain, 5G core domain and cloud domain.

are located far from end users, generally as cloud-based services. Consequently, significant network resources are being deployed to transmit such volumes of data to the cloud for verification. Consequently, this approach increases latency, posing a significant challenge for time-sensitive scenarios that demand rapid response times to ensure safety and effective emergency management. Processing data in computation nodes located closer to the end user can significantly reduce transmission time, leading to a decrease in power consumption which is a highly desirable outcome [4]. Edge computing enables the implementation of the most suitable security measures closer to the end user, thus minimizing the risks of data leakage and reducing the need for extensive data storage.

3) MACHINE LEARNING-ENABLED ZERO TRUST ARCHITECTURES

Machine learning techniques are well suited to enhance the application of the Zero-Trust concept in the design of intrusion detection systems. To date, these techniques have shown promising results in research, but the author of [4], highlighted the lack of a complete framework on how to implement these models in real-life scenarios. An examination of the studies presented above reveals a well-defined implementation scheme for both centralized and federated learning algorithms in theory that includes the choice of the dataset, the features, and the detection algorithm. The parameters of these algorithms vary according to a number of factors, and some works omit certain implementation details. It is therefore difficult to establish a reliable basis for comparison in order to identify the most appropriate configurations for each scenario, and hence tighten the gap between theoretical implementation and real-life scenarios implementation.

4) FEDERATED LEARNING FOR ROBUST, DISTRIBUTED, AND LIGHTWEIGHT IDSs

The increasing prevalence of distributed attacks, particularly DoS and DDoS attacks, which can emerge instantaneously from multiple sources, urges manufacturers to design distributed and hierarchical defense systems. Consequently, it facilitates the testing of distributed machine learning models, such as federated learning, to further expand the defense implementations on a greater number of network nodes. It also enables the study of distributed/joint defense and its effectiveness compared to a single point of defense strategy. Defense effectiveness can improve detection accuracy (supported by more information sensed and collected from multiple sources) and in mitigation (containing the impact of DoS threats by implementing active defenses in different nodes) [34]. It should be noted that resource heterogeneity in these types of models, such as the varying storage, computational, and communication capabilities of each device, may affect the performance of the global model. Thus, addressing these problems will also be an essential key focus for future research [26].

VIII. Wi-Fi-SPECIFIC IDS

In this section, we review several studies on intrusion detection in Wi-Fi networks. This section is structured exactly as the previous one as it covers intrusion detection methods and architectures followed by a discussion around key findings and insights.

A. METHODS

Liu et al. [13] aim to tighten the gap between the functions of commercial wireless devices and the service requirements of the WLAN security market. To do so, they propose iWEP, an agile user-centered platform designed to provide early warning services for target WLAN network administrators. iWEP combines rule-based and learning-based algorithms to achieve a good trade-off between system performance and WLAN security by considering WLAN's characteristics and real-world implementation factors. The rules used in rule-based detection were extracted from attacking simulations to detect only KRACK attacks. The proposed deep neural network has 3 hidden layers of 21, 50, 1 nodes in order. They used a custom dataset of 485000 training and 145000 testing records. The authors claim that iWEP is based on a user-centered implementation to support human-machine interactions. Therefore, iWEP is helpful for administrators to understand the current security situation of WLAN regions.

IMPACT (IMPersonation Attack deteCTion using deep auto-encoder and feature abstraction) [22] was presented as a lightweight ML-based IDS that leverages the edge computing paradigm. To build the model, authors first reduced the number of features through feature extraction and selection using a stacked autoencoder (SAE), mutual information (MI) and C4.8 wrapper. For the classification process, the authors used gradient-based linear Support Vector Machine (SVM). As the final set of selected features resulted in one temporal feature (frame.time_epoch), the model trained without the temporal feature was experimented, and the results showed that the model without the feature had worse performance than the model with the feature. Hence, the authors suggest analyzing the temporal features of the AWID dataset and their use for further research.

Chatzoglou et al. [16] provide a detailed reasoning behind human-driven feature selection of IEEE 802.11 features. They proposed 16 features that can be used as a solid reference for the creation of robust and potentially lightweight IEEE 802.11-specific IDS. The authors argue that the selected features are conceivably transferable between different 802.11 datasets, as the authors performed tests on both AWID2 and AWID3 datasets representing diverse generations of the Wi-Fi standard. The experiments demonstrate that with a rather small set of 16 features and without the use of any optimization or ensemble method, shallow and deep learning classification can achieve good results.

Uszko et al. [17] proposed an enhanced wireless intrusion detection system (WIDS) that combines rule-based methods to identify already analyzed and well-known attacks and machine learning techniques to handle unknown zero-day attacks. This combination is supposed to make the best use of the resources of the log-analyzing machine and hence make the system suitable for resource-constrained environments. The system provides a modular framework that helps add new detection rules if necessary, e.g. as new attacks emerge. Additionally, authors designed the system on the presumption to react early and minimize false positives, hence, rules thresholds were set to be highly restrictive. As for machine learning models, adopting custom datasets testing methods makes it possible to demonstrate that the model does not suffer from over-fitting. The proposed system was inspired by the OpenWIPS-ng [44] project and papers like [13].

Gebresilassie et al. [5] designed a transfer learning (TL) and convolutional neural network (CNN) based IDS dedicated to the detection of de-authentication and disassociation attacks in IoT Wi-Fi networks. In this paper, the authors proposed four novel features for de-authentication and disassociation attack detection models accompanied by effective real-time data collection and parsing, analysis, and visualization to generate their own dataset, namely, the Wi-Fi Association_Disassociation Dataset that they made publicly available for the research community [45]. The dataset contains 376430 malicious samples and 233,130 normal ones. The IDS is composed of six modules: Attack and normal traffic module, log parsing module, indexing and analysis module, visualization and dataset generation module, data pre-processing module, and attack detection module.

Sassi et al. [23] designed a new meta-heuristic BHHO-EAS inspired by the HHO-EAS meta-heuristic to design an embeddable IDS in IEEE 802.11 IoT networks. The proposed method integrates a Convolutional Neural Network (CNN) designed to suit IoT resource-constrained environments. They are the first to have applied a feature selection method using meta-heuristic optimization on the AWID3 dataset. The defense strategy focuses on seven specific Data Link Layer attacks that are initiated from the Physical layer and are finalized at the Data Link Layer. Once the attacker has taken over the Data Link Layer, it will be easier for him to escalate the higher layers to have greater privileges and a much greater capacity for harm. The authors compared their work with [16] and claim to have achieved a better F1-score. However, this should be thoroughly examined because, unlike the first authors, the latter have rebalanced their dataset and consequently the results do not reflect the real scenario where malicious packets are under-represented.

Thankappan et al. [18] proposed a signature-based intrusion detection system to detect Multi-Channel MitM (MC-MitM) attacks. The proposed defense mechanism is made up of four main units: traffic interceptor, device database unit, MC-MitM detection coordinator unit, and alert generator unit. The detection coordinator unit uses a two-stage verification policy: stage 1 aims to protect against attackers prior to obtaining the MC-MitM position, and stage 2 concentrates on defending against MC-MitM enabled attacks (such as KRACK, cipher downgrades, and FragAttacks) after the attacker has gained control of the MC-MitM position. Signatures are inferred by identifying genuine attack vectors, including rogue channels, rogue devices, or spoofed channel switch announcements, and thresholds derived from a theoretical analysis of the Wi-Fi protocol or an empirical analysis. The detection controller orchestrates

the entire detection process using a probe interval structured as a sliding window with an inter-probe interval delay. The authors performed a set of experiments and determined an optimal probe interval duration of 60 seconds that achieves a true positive rate (TPR) of 90% by short-distance detectors and 84% by long-distance detectors. Moreover, they observed a significant improvement in detection performance with a 10 seconds inter-probe delay. The authors assert that one of the key strengths of their framework is its versatility and independence of encryption techniques (WPA, WPA2, or WPA3), personal or enterprise networks, PMF standards, and Wi-Fi frequency bands (2.4 and 5 GHz). However they admit that it does not support concurrent monitoring of two APs or different channels and does not include prevention capabilities.

B. MODULES AND ARCHITECTURES

Liu et al. [13] propose a hierarchical IDS distributed across two servers: an edge secure services server in charge of real-time network traffic monitoring and referred to as ESSS in the Figure 8) as well as a remote central server, referred to as RCS in 8 that offers secure services such as network situational awareness, threat alerts, source localization and early warning. They rely on edge computing technology to make a good trade-off between system performance and WLAN security, taking into account WLAN's characteristics and real-world implementation factors.

Uszko et al. [17], position their IDS on an on-premise intrusion detection agent (referred to as OP-DA in 8) to monitor different WLAN networks. They argue that the system is designed to operate in resource-constrained environments, but they provide no details about the characteristics of the agent.

Sassi et al. [23] propose a lightweight CNN-IDS compatible with IoT devices. This IDS, although lightweight, is based on convolutional neural networks that are mainly used in computer vision and image processing and are known to be very resources-consuming. To prove the effectiveness of their model, the authors managed to run their IDS in a Raspberry Pi 4 Model B IoT environment.

Thankappan et al. [18] propose a lightweight and centralized online passive plug-and-play intrusion detection system that can be easily integrated into Wi-Fi-based IoT environments without modifying any network settings or existing devices. They conducted their experiments in a practical smart-home environment using an HP Elite 8300 with High Gain TP-Link TL WN722N/ Wi-Fi nation Wi-Fi adaptors as an on premise plug-and-play agent (OP-PAP). For future work, they are considering developing a distributed detection system that enables multiple detectors to concentrate on different APs with varying channel frequencies.

C. DISCUSSION

1) NARROW SELECTION OF IEEE 802.11 ATTRIBUTES

We observe that feature analysis in Wi-Fi-specific defense mechanisms is advanced compared to 5G. These enhancements are driven by the availability of datasets that include specific Wi-Fi attacks targeting the MAC layer and unique IEEE 802.11 features. These features linked to Wi-Fi frames are independent of evolving security protocols in IEEE 802.11 networks. Thus the analysis remains accurate and effective, even as the technology evolves over time, providing a solid foundation for intrusion detection mechanisms. Hence, feature selection in Wi-Fi networks remains a prominent topic in the literature, focusing on identifying the minimal set of attributes that can effectively detect the maximum number of attacks. This optimization aims to enhance the detection accuracy while minimizing computational overhead, thus making intrusion detection systems more efficient and scalable.

2) CONVENTIONAL VS LEARNING METHODS IN Wi-Fi NETWORKS

Signature- and rule-based detection methods are inherently resource intensive due to the sequential execution of multiple algorithms needed to identify and verify an attack. Each attack often requires several signature- or rule-based algorithms and verification steps. This computational demand increases significantly when handling multiple simultaneous attacks. Consequently, there is a growing trend towards hybridization techniques, combining signature and rule-based methods ([18]) or rule- and learning-based approaches ([13], [17]), to improve efficiency, scalability and reduce resource consumption. On the other hand, machine learning (ML) is gaining popularity in Wi-Fi intrusion detection due to its scalability, adaptability, and capacity to detect both known and unknown attacks. Their ability to process data in real time, continuously improve through retraining, and adapt to evolving threats makes them a more efficient and scalable solution for modern intrusion detection systems.

3) INSIGHTS ON THE DESIGN OF FUTURE LIGHTWEIGHT WI-FI DEFENSE SYSTEMS

A critical requirement for Wi-Fi defense mechanisms is that they do not require modifications of the Wi-Fi protocol, nor do they require advanced hardware or software deployment on each Wi-Fi client and/or access point (AP). Consequently, such mechanisms are only effective if all devices within a WLAN are compatible with them. However, this stringent requirement is not always feasible, particularly for IoT devices or certain Wi-Fi clients that lack the necessary compatibility to implement these defense mechanisms [18]. Although some research has focused on minimizing the feature set and configuring lightweight models to address resource constraints, there remains a notable gap in evaluating prediction times. Moreover, the absence of distributed intrusion detection systems (IDS) designed for Wi-Fi networks highlights a significant opportunity. Distributed approaches could offer a promising solution for implementing lightweight and scalable IDS in such environments.

TABLE 3. Comparative summary of surveyed IDSs for Wi-Fi networks.

Reference	Year	Dataset	Feature Selection	Number of features	Algorithm	Performance
[13]	2019	Custom	Not specified	Not reported	Rules + Deep Neural Network (DNN)	Accuracy = 96%
[22]	2020	AWID	Stacked Auto-Encoders (SAE), Mutual Information (MI) and C4.8	5	SVM	F1-score = 98.21%
[16]	2022	AWID3	Expert-driven	16	LightGBM	Accuracy = 99.55%
[17]	2023	AWID3	Expert-driven	16	Rules + Decision Trees (DT)	Accuracy = 98.57%
[5]	2023	[45]	Expert-driven	4	Convolutional Neural Networks (CNN)	Accuracy = 99.36%
[23]	2023	AWID3	BHHO-EAS	8	Convolutional Neural Networks (CNN)	F1-score = 99,78%
[18]	2024	Custom + AWID3	Expert-driven	10	Thresholds and rules	F1-score = 82%

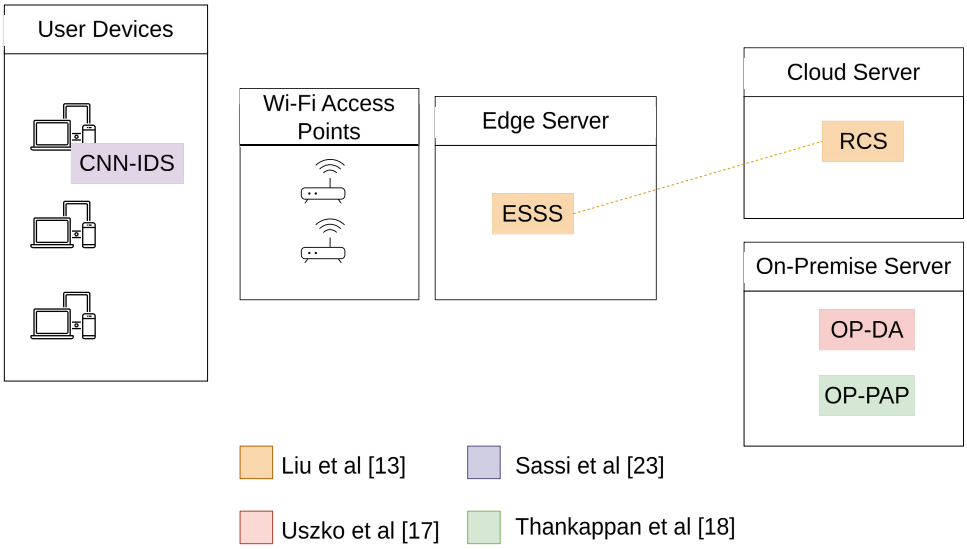

FIGURE 8. Placement of all surveyed IDS modules in a generic Wi-Fi network architecture including user devices, Wi-Fi access points, edge server, cloud server and on-premise server.

IX. 5G/Wi-Fi CONVERGENCE: ONGOING STANDARDIZATION

Although the convergence of 5G and Wi-Fi has long been associated with offloading and load balancing solutions for the debottlenecking of 5G networks, these two technologies are expected to converge in the near future to offer seamless access to network services. According to the Wireless Broadband Alliance (WBA) annual report, it is certain that 5G will need to complement and co-exist with its equally powerful twin: Wi-Fi, since much of the smartphone traffic (74%) is still carried on Wi-Fi networks (source: Ofcom) [2]. There are several relevant real-world scenarios for deploying an integrated multi-Wireless Access Technologies (multi-WAT) system, such as private 5G/Wi-Fi networks. In general, the most relevant scenarios present themselves in case of a disaster, an emergency, or a temporary need. An operator may face challenges in addressing temporary increases in network demand, as deploying a 5G cell can be prohibitively expensive or impractical for short-term needs. In such scenarios, Wi-Fi networks offer a cost-effective and flexible alternative. Wi-Fi networks can be easily installed and connected to the 5G core network as described in [46].

Convergence, as described in the 16th release of the 3rd Generation Partnership Project (3GPP) technical specifications [46], takes place at the 5G Core network level. According to recent advancements in the field, this convergence is seen as a multi-connectivity framework of two wireless access technologies integrated at the Core level, better known as co-existence with non-3GPP systems. 5G core is expected to support trusted (5G) and untrusted (Wi-Fi) non-3GPP access networks. In other terms, the Wi-Fi hotspot connects to a 5G Core network using the Non-3GPP Interworking Function (N3IWF). 5G ensures authentication and security in similar use cases using a unified authentication framework that offers the same authentication for 3GPP and non-3GPP access nodes.

Cogalan et al. [38] propose 5G-Clarity, which is the first European project (European Commission H2020) that implements 3GPP specifications for industry 4.0 Networks (Industrial Internet of Things (IIoT)). 5G-Clarity is a Beyond 5G Multi-Tenant Private Networks that integrates Cellular, Wi-Fi, and Li-Fi access technologies. The system is composed of four different strata that are powered by Artificial Intelligence and Intent-Based Policy. The proposed architecture relies on Virtual Network Functions (VNFs) and Virtual Application Functions (VAFs), commonly referred to as VxFs. VNFs include virtual Radio Access Network Functions, User Plane Functions (UPF), and non-3GPP access functions for multi-connectivity while VAFs include Access Traffic Steering, Switching and Splitting (AT3S) functions, localization and positioning applications. This integration provides user and control plane separation (CUPS), leverages the O-RAN reference architecture and interfaces, and adopts the 5G standalone mode. This system can easily provide advanced localization and synchronization capabilities thanks to a joint radio/mmWave system for real-time high-resolution positioning and better spectral efficiency.

The Wireless Broadband Alliance (WBA) 5G Work Group [2], is another key technological contributor in this field. This group is working directly on 5G & Wi-Fi Convergence for Private 5G Networks and they tackle the topic from a different point of view. They argue that 5G and Wi-Fi convergence can fulfill the growing enterprise demands for a robust, secure, high-throughput, and reliable connectivity service without any integration at the 5G Core level. Enterprises now have the option of expanding and increasing their wireless coverage density by complementing their IEEE 802.11-based wireless architectures with 5G systems. As a result, 5G is going to be another mainstream access technology incorporated in enterprise architectures. They proposed three deployment models for bringing 5G into private enterprise networks: Core Network & Application Services are On-Prem, User Plane & Application Services are On-Prem, Core Network & Application Services are in the cloud. In the first deployment model, the Radio Access Network (RAN), the 5G core network, the user plane elements, and the application services are on-premise. By keeping all traffic on-premise, this model ensures data sovereignty, site resiliency, and application latency requirements. As for enterprise cloud-based applications, it is possible to access them, but there are some resilience and latency limitations that apply. The second deployment model suggests moving the control plane to the cloud for control plane aggregation in a multi-site 5G core network deployment. All other 5G elements and the application services are on-premise. This model will not introduce any new latency in user plane traffic. However, if access network connectivity is interrupted, access to the cloud-based control plane will be lost, and the resulting impact on serving existing devices and new registrations must be addressed. In the third model, the core network and the application services are in the cloud. Hence, the user plane traffic from the 5G devices will always have to enter the cloud. However, for user plane traffic to and from on-prem application services, the traffic takes a zigzag path. The user plane traffic between the end user and the on-prem application server will always hit the cloud user plane. All traffic will hit the security firewall and may have to pass through Network Address Translation (NAT). This may be undesirable for some applications and scenarios.

X. INSIGHTS, CHALLENGES, AND OPEN ISSUES

This section addresses three key aspects related to the development of IDSs for convergent 5G/Wi-Fi networks: recommendations for the design and evaluation of IDSs, urgent challenges that require immediate attention for effective IDS design, and long-term challenges that must be addressed for sustained evolution and adaptability. Each aspect is discussed in detail to provide a comprehensive understanding of both immediate priorities and future directions in this rapidly evolving field.

A. IDS DESIGN AND EVALUATION FRAMEWORK

Several key factors are critical for effective attack resolution in Intrusion Detection Systems (IDSs), including system durability and reliability, rapid attack detection, minimal false positive rates (alarm rates), maximum detection rates, and low resource consumption [34]. To ensure clarity, reproducibility, and effectiveness in achieving these objectives, it is essential to compare IDS proposals based on a unified framework that addresses these critical factors. To this end, Table 4 presents a comprehensive and structured implementation scheme for the design and evaluation of IDSs. This scheme is divided into four critical phases: feature selection, detection strategy, architecture design, and evaluation. Each phase is tailored to guide researchers in systematically developing IDSs that meet the performance benchmarks outlined and address the diverse challenges posed by modern network environments following a set of configurations. For each surveyed work, we specify whether or not the configurations are reported.

1) Feature Selection: This phase involves identifying the minimal yet effective set of features required to detect all the attacks discussed in this paper. This step can be accomplished through either automated feature selection methods or through manual identification by domain experts.
2) Detection Strategy: Researchers should detail the proposed detection algorithm comprehensively. This includes information on the signature database (or its construction process), thresholds and inference rules, algorithm hyperparameters along with the tuning strategies, and the number of hidden layers (if applicable).
3) Architecture Design: A detailed reflection on the IDS architecture is essential. This step specifies the placement of nodes and modules throughout the system to ensure optimal deployment and performance.

4) Evaluation: The evaluation phase requires thorough documentation of various configurations, including data-splitting strategies, performance metrics, time measurement techniques, libraries, and hardware specifications. For systems employing federated learning, additional details such as the aggregation function, the number of simulated clients, and data distribution policies must also be explicitly described.

B. URGENT GAPS TO ADDRESS

An effective Intrusion Detection System (IDS) must seamlessly integrate with various technologies to ensure robust protection in heterogeneous environments. Modern networks operate in diverse physical settings: homes, factories, and cities, each characterized by distinct network functions, architectures, and terminal devices. This diversity introduces unique network traffic patterns and varying security threats. The advent of convergent 5G/Wi-Fi networks, which are geographically distributed, heterogeneous, and hierarchical, further complicates the deployment of a unified IDS. Consequently, personalized detection models are indispensable, as a single model cannot effectively address the unique challenges posed by 5G-specific and Wi-Fi-specific attacks at once. In the following, we discuss key contrasts and challenges that need resolution.

1) ACCESS TECHNOLOGY-SPECIFIC FEATURES

Referring to Table 4, a clear trend toward the adoption of learning-based algorithms for both Wi-Fi and 5G intrusion detection is emerging. In particular, Wi-Fi research has made significant progress in defining attributes specific to access technology, achieving considerable results. In contrast, 5G studies often hesitate to disclose their selected feature sets, and when shared, these attributes are rarely specific to 5G access technology. This discrepancy can be attributed to the limited availability of 5G-specific datasets, which hinders the development and evaluation of customized models.

2) DECENTRALIZATION

The deployment and embedding of lightweight IDSs is one of the most urgent challenges that need to be addressed urgently. Many experts are trying to propose efficient and deployment-agnostic modules by optimizing the features and parameters of the proposed algorithms. However, adapting these algorithms to resource-constrained environments remains challenging. An open avenue in this regard is to leverage decentralization paradigms by coupling recent advanced networking principles like NFV with recent federated learning architectures. As illustrated in the placement node maps (Figures 7 and 8) and summarized in Table 4, 5G-specific IDSs reflect the trend towards distributed architectures. The growing reliance on NFV-based core networks in 5G has enabled the integration of data analysis modules for intrusion detection, allowing for scalability and flexibility. Similarly, SDN-based Wi-Fi controllers, which decouple the control plane from the data plane, can facilitate the deployment of analysis functions in distributed modes. WLAN controllers are central nodes that provide a full picture of the control plan and can therefore act as servers to monitor and manage local intrusion functions that can be supported by resource-constrained devices such as access points. Hence, this shows an open avenue that needs to be addressed urgently.

3) PERFORMANCE MEASUREMENT

Comparing performances before integration is essential; however, achieving equitable comparisons remains a challenge for three main reasons: the distribution of data, performance measurement metrics, and the specifications or requirements under which evaluations are conducted. In convergent 5G/Wi-Fi networks, understanding the data distribution is critical. These networks are inherently non-homogeneous, with data availability often skewed —more prevalent in 5G or Wi-Fi depending on the use case. Such disparities necessitate focused studies on data distribution to ensure balanced and fair evaluations. Performance measurement also requires careful consideration. Although many studies report accuracy as a default metric, this measure can be misleading, particularly with imbalanced datasets. In such cases, metrics such as the F1-score and the area under the curve (AUC) are more reliable [16]. Consequently, in Tables 2 and 3, we report performance using the F1-score for imbalanced datasets and the accuracy for rebalanced datasets (as detailed in the summary of the class distribution in Table 1). This approach was adopted for the three studies of: [4], [23], [26]. However, in studies where the F1-score metric is not reported ([13], [17], [25]), we report accuracy although the original dataset is imbalanced. Finally, time metrics are critically under-reported in Wi-Fi-related studies (Table 4). Most works do not document this metric, except for Chatzoglou et al. [16], which reports training time but not inference time. For a seamless 5G/Wi-Fi convergence, detection times must be thoroughly measured to avoid detection delays that can hinder latency and enable synchronous communication between nodes. Addressing this gap is crucial for fostering interoperability and real-time responsiveness across these technologies.

C. CHALLENGES IN THE LONG RUN

In the long run, two main challenges must be addressed to ensure the effectiveness of IDSs in convergent 5G/Wi-Fi networks. First, achieving IDS sustainability and durability within networks requires ongoing development, including mechanisms to protect data privacy and robust adversarial defenses to counteract attacks targeting IDS itself. Second, proactive measures must be implemented to contain and mitigate attacks within the network, minimizing their impact and preventing further propagation. Addressing these challenges is essential for maintaining resilient and secure network environments over time.

TABLE 4. A framework for the design and evaluation of IDSs highlighting the reported configurations for every surveyed work. ☑ The corresponding configuration is reported for this work. ☒ The corresponding configuration is not reported for this work. ⊟ The work is not concerned by this configuration.

Phase	Configuration		5G-related Works									Wi-Fi-related Works						
			[7]	[40]	[25]	[41]	[26]	[4]	[27]	[42]	[43]	[13]	[22]	[16]	[17]	[5]	[23]	[18]
Feature Selection	Method		✓	✓	×	✓	×	✓	×	✓	×	×	✓	✓	✓	✓	✓	×
	Set of selected features		✓	×	×	✓	✓	✓	✓	✓	✓	×	✓	✓	✓	✓	✓	✓
	Specific to access technology		×	×	×	×	×	×	×	×	×	×	✓	✓	✓	✓	✓	✓
Detection Strategy	Algorithm		✓	✓	✓	✓	✓	✓	✓	✓	✓	✓	✓	✓	✓	✓	✓	✓
	Conventional methods	Signature database	–	–	–	–	–	–	–	–	–	–	–	–	–	–	–	–
		Thresholds and rules	–	–	–	–	–	–	–	–	–	×	–	–	✓	–	–	✓
	Learning methods	Hyper-parameters	✓	✓	✓	✓	✓	✓	✓	✓	✓	✓	✓	✓	✓	✓	✓	–
		Layers	✓	✓	✓	✓	✓	–	✓	✓	✓	✓	✓	✓	×	✓	✓	–
Architecture	Centralized		–	×	–	–	–	✓	–	×	–	–	×	×	✓	×	✓	✓
	Distributed	Hierarchical mode	✓	×	–	–	–	–	–	×	–	✓	×	×	–	×	–	–
		Federated mode	–	×	✓	✓	✓	–	✓	×	✓	–	×	×	–	–	–	–
Evaluation	Data splitting strategy		✓	✓	✓	×	✓	✓	✓	✓	✓	×	×	✓	×	✓	×	–
	Performance metric		✓	✓	✓	✓	✓	✓	✓	✓	✓	✓	✓	✓	✓	✓	✓	✓
	Time metric		✓	×	×	✓	×	✓	✓	×	×	×	×	✓	×	×	×	×
	Technologies and libraries		✓	✓	×	×	✓	✓	✓	✓	✓	✓	×	✓	✓	✓	✓	✓
	Hardware specifications		×	✓	×	×	✓	×	×	✓	✓	×	×	✓	✓	✓	✓	✓
	Federated learning	Data distribution	–	–	×	×	✓	–	✓	–	✓	–	–	–	–	–	–	–
		Number of clients	–	–	✓	✓	✓	–	✓	–	✓	–	–	–	–	–	–	–
		Aggregation function	–	–	✓	×	✓	–	×	–	✓	–	–	–	–	–	–	–

1) DATA PRIVACY AND ADVERSARIAL DEFENSE

Data privacy has always been a critical concern, with data often existing in isolated 'islands' due to security and privacy issues [25]. Data from different industries, or even different companies within the same industry, cannot be easily shared. Although vast amounts of data are generated across different networks, it is not feasible to collect, integrate, and use them all in a centralized location. Since Wi-Fi and 5G use cases can operate independently, it is impractical to send all data to a central server to support the IDS function. This highlights the urgent need to design an IDS that integrates information from various scenarios while protecting user data and privacy, thus maximizing the full potential of the 5G/Wi-Fi convergence infrastructure. However, certain use cases generate insufficient data to train a robust local intrusion detection model. To address this challenge, new mechanisms for sharing knowledge between nodes are needed. The IDS model for 5G/Wi-Fi networks must integrate attack data from multiple sources to enhance detection and defense capabilities across such networks. Furthermore, attackers increasingly employ advanced techniques to alter data behavior, injecting noise or subtle, carefully crafted data to evade detection. Consequently, IDS systems must be equipped with robust resistance mechanisms against evasion attacks, often leveraging adversarial machine learning tools to introduce slight perturbations or using explainable AI (XAI) for better understanding of the models [34].

2) ACTIVE DEFENSE STRATEGIES

The ability to accurately pinpoint the exact location of an intrusion within the network is crucial for a swift and effective response. Identifying the source or point of compromise enables security analysts to quickly contain the threat, mitigate its effects, and restore normal operations. This capability is particularly important in complex and distributed network architectures, such as those found in 5G and Wi-Fi environments, where the network spans multiple nodes, devices, and access points. Given the distributed nature of these networks, intrusions can spread across various segments, making precise localization essential for a targeted intervention. While most existing research focuses primarily on detection strategies, which are vital to building the intelligence necessary for active defense, future studies should explore the active defense mechanisms and countermeasures that should be triggered once a threat is detected and identified. These responses may include filtering malicious traffic to prevent further spread, managing network bandwidth and rate control to protect critical services from being overwhelmed, re-routing traffic away from vulnerable areas to maintain network availability, and constructing

priority channels to allocate resources to essential services during an attack [34]. Such countermeasures would not only enhance the effectiveness of intrusion detection systems but also improve the overall resilience and robustness of the network against evolving threats.

XI. CONCLUSION

In conclusion, this study provides a thorough review of intrusion detection systems (IDS) with a particular focus on Wi-Fi and 5G-specific solutions designed to identify, contain, and counter emerging threats in future convergent 5G and Wi-Fi networks. The advent of 5G networks has introduced significant flexibility in integration, prompting manufacturers to explore the convergence of cellular networks with Wi-Fi. For this convergence to succeed, various concepts have been proposed, relying on modern networking principles that necessitate reorganizing network components, separating control and data planes, and strategically placing resources closer to users or further from them. Despite the potential benefits, convergent architectures face a variety of security challenges tied to the architecture itself, the access technologies, and the networking paradigms that underpin these designs. The high volume of data transiting through these networks, along with the rise of zero-day attacks exploiting unknown signatures, requires the development of precise, fast, and robust solutions capable of detecting and containing threats at their point of origin before they propagate through the network. However, current methods are often resource intensive and susceptible to manipulation, as attackers increasingly employ techniques to alter input data and deceive IDS models. To overcome these weaknesses, future research should focus on leveraging adversarial machine learning techniques, offering promising avenues for enhancing the robustness and effectiveness of IDSs in convergent 5G/Wi-Fi networks.

REFERENCES

[1] E. Oughton, G. Geraci, M. Polese, and V. Shah, "Prospective evaluation of next generation wireless broadband technologies: 6G versus Wi-Fi 7/8," *SSRN Electron. J.*, p. 23, Aug. 2023.

[2] W. G. W. Group. (2023). *Private 5G and Wi-Fi Convergence—Key Use Cases and Requirements*. [Online]. Available: https://wballiance.com/resource/private-5g-and-wi-fi-convergence-key-use-cases-and-requirements/

[3] D. Maciel, E. Paiva, K. Costa, M. Lima, V. Lopes, A. Neto, F. Dantas, and S. Sampaio, "A WiFi-slicing MANO solution to enable elastic WiFi-sharing communication service end-to-end provision," in *Proc. 36th Annu. ACM Symp. Appl. Comput.*, Mar. 2021, pp. 1122–1129.

[4] M. G. Nour, "Implementing machine learning to achieve dynamic zero-trust intrusion detection systems (Zt-ids) in 5G based IoT networks," Ph.D. dissertation, George Washington Univ., Washington, DC, USA, 2023.

[5] S. K. Gebresilassie, J. Rafferty, L. Chen, Z. Cui, and M. Abu-Tair, "Transfer and CNN-based de-authentication (Disassociation) DoS attack detection in IoT Wi-Fi networks," *Electronics*, vol. 12, no. 17, p. 3731, Sep. 2023.

[6] L. F. Maimó, F. J. G. Clemente, M. G. Pérez, and G. M. Pérez, "On the performance of a deep learning-based anomaly detection system for 5G networks," in *Proc. IEEE SmartWorld, Ubiquitous Intell. Comput., Adv. Trusted Comput., Scalable Comput. Commun., Cloud Big Data Comput., Internet People Smart City Innov. (SmartWorld/SCALCOM/UIC/ATC/CBDCom/IOP/SCI)*, Aug. 2017, pp. 1–8.

[7] L. F. Maimó, Á. L. Perales Gómez, F. J. García Clemente, M. Gil Pérez, and G. Martínez Pérez, "A self-adaptive deep learning-based system for anomaly detection in 5G networks," *IEEE Access*, vol. 6, pp. 7700–7712, 2018.

[8] M. Ozkan-Okay, R. Samet, Ö. Aslan, and D. Gupta, "A comprehensive systematic literature review on intrusion detection systems," *IEEE Access*, vol. 9, pp. 157727–157760, 2021.

[9] P. Angueira, I. Val, J. Montalbán, Ó. Seijo, E. Iradier, P. S. Fontaneda, L. Fanari, and A. Arriola, "A survey of physical layer techniques for secure wireless communications in industry," *IEEE Commun. Surveys Tuts.*, vol. 24, no. 2, pp. 810–838, 2nd Quart., 2022.

[10] S. Szott, K. Kosek-Szott, P. Gawlowicz, J. T. Gómez, B. Bellalta, A. Zubow, and F. Dressler, "Wi-Fi meets ML: A survey on improving IEEE 802.11 performance with machine learning," *IEEE Commun. Surveys Tuts.*, vol. 24, no. 3, pp. 1843–1893, 3rd Quart., 2022.

[11] A. Boualouache and T. Engel, "A survey on machine learning-based misbehavior detection systems for 5G and beyond vehicular networks," *IEEE Commun. Surveys Tuts.*, vol. 25, no. 2, pp. 1128–1172, Feb. 2023.

[12] H. Kim, "5G core network security issues and attack classification from network protocol perspective," *J. Internet Services Inf. Secur.*, vol. 10, no. 2, pp. 1–15, 2020.

[13] R. Liu, W. Wang, J. Wang, Z. Ou, H. Qiu, B. Wang, and Q. Liu, "IWEP: An intelligent WLAN early warning platform using edge computing," in *Proc. 15th Int. Conf. Mobile Ad-Hoc Sensor Netw. (MSN)*, Dec. 2019, pp. 384–389.

[14] C. Kolias, G. Kambourakis, A. Stavrou, and S. Gritzalis, "Intrusion detection in 802.11 networks: Empirical evaluation of threats and a public dataset," *IEEE Commun. Surveys Tuts.*, vol. 18, no. 1, pp. 184–208, 1st Quart., 2016.

[15] E. Chatzoglou, G. Kambourakis, and C. Kolias, "Empirical evaluation of attacks against IEEE 802.11 enterprise networks: The AWID3 dataset," *IEEE Access*, vol. 9, pp. 34188–34205, 2021.

[16] E. Chatzoglou, G. Kambourakis, C. Kolias, and C. Smiliotopoulos, "Pick quality over quantity: Expert feature selection and data preprocessing for 802.11 intrusion detection systems," *IEEE Access*, vol. 10, pp. 64761–64784, 2022.

[17] K. Uszko, M. Kasprzyk, M. Natkaniec, and P. Chołda, "Rule-based system with machine learning support for detecting anomalies in 5G WLANs," *Electronics*, vol. 12, no. 11, p. 2355, May 2023.

[18] M. Thankappan, H. Rifà-Pous, and C. Garrigues, "A signature-based wireless intrusion detection system framework for multi-channel man-in-the-middle attacks against protected Wi-Fi networks," *IEEE Access*, vol. 12, pp. 23096–23121, 2024.

[19] H. Sounni, E. Najib, and L. Fatima, "Distributed denial of service attacks detection using statistical process control in centralized wireless networks," *J. Eng. Sci. Technol.*, vol. 17, no. 2, pp. 1436–1446, 2022.

[20] D. Schepers, A. Ranganathan, and M. Vanhoef, "On the robustness of Wi-Fi deauthentication countermeasures," in *Proc. 15th ACM Conf. Secur. Privacy Wireless Mobile Netw.*, May 2022, pp. 245–256.

[21] D. E. Denning, "An intrusion-detection model," *IEEE Trans. Softw. Eng.*, vol. SE-13, no. 2, pp. 222–232, Feb. 1987.

[22] S. J. Lee, P. D. Yoo, A. T. Asyhari, Y. Jhi, L. Chermak, C. Y. Yeun, and K. Taha, "IMPACT: Impersonation attack detection via edge computing using deep autoencoder and feature abstraction," *IEEE Access*, vol. 8, pp. 65520–65529, 2020.

[23] M. Sassi, "Low carbon footprint intrusion detection in IoT systems based on deep learning algorithms combined with a metaheuristic," Ph.D. dissertation, CY Cergy Paris Univ., Cergy, France, 2023.

[24] H. Satilmiş, S. Akleylek, and Z. Y. Tok, "A systematic literature review on host-based intrusion detection systems," *IEEE Access*, vol. 12, pp. 27237–27266, 2024.

[25] Y. Fan, Y. Li, M. Zhan, H. Cui, and Y. Zhang, "IoTDefender: A federated transfer learning intrusion detection framework for 5G IoT," in *Proc. IEEE 14th Int. Conf. Big Data Sci. Eng. (BigDataSE)*, Dec. 2020, pp. 88–95.

[26] X. Sun, Z. Tang, M. Du, C. Deng, W. Lin, J. Chen, Q. Qi, and H. Zheng, "A hierarchical federated learning-based intrusion detection system for 5G smart grids," *Electronics*, vol. 11, no. 16, p. 2627, Aug. 2022.

[27] H. Sedjelmaci and A. Boualouache, "When two-layer federated learning and mean-field game meet 5G and beyond security: Cooperative defense systems for 5G and beyond network slicing," *IEEE Trans. Netw. Service Manage.*, vol. 21, no. 1, pp. 1178–1189, Feb. 2024.

[28] (1998). *Darpa Dataset*. [Online]. Available: https://www.ll.mit.edu/r-d/datasets/1999-darpa-intrusion-detection-evaluation-dataset

[29] (1999). *KDD Cup 99 Dataset*. [Online]. Available: https://www.kdd.org/kdd-cup/view/kdd-cup-1999/Data
[30] (1999). *NSL KDD Dataset*. [Online]. Available: https://www.unb.ca/cic/datasets/nsl.html
[31] Caida. (2007). *Ddos 2007 Attack*. [Online]. Available: https://catalog.caida.org/dataset/ddos_attack_2007
[32] (2018). *Intrusion Detection Evaluation Dataset (CIC-IDS2017)*. [Online]. Available: https://www.unb.ca/cic/datasets/ids-2017.html
[33] (2011). *CTU-13*. [Online]. Available: https://www.stratosphereips.org/datasets-ctu13
[34] S. Samarakoon, Y. Siriwardhana, P. Porambage, M. Liyanage, S.-Y. Chang, J. Kim, J. Kim, and M. Ylianttila, "5G-NIDD: A comprehensive network intrusion detection dataset generated over 5G wireless network," 2022, *arXiv:2212.01298*.
[35] (2015). *Awid2 Dataset*. [Online]. Available: https://icsdweb.aegean.gr/awid/awid2
[36] R. Panigrahi and S. Borah, "A detailed analysis of CICIDS2017 dataset for designing intrusion detection systems," *Int. J. Eng. Technol.*, vol. 7, no. 3.24, pp. 479–482, 2018.
[37] (2018). *Intrusion Detection Evaluation Dataset (CIC-IDS2018)*. [Online]. Available: https://www.unb.ca/cic/datasets/ids-2018.html
[38] T. Cogalan et al., "5G-CLARITY: 5G-advanced private networks integrating 5GNR, WiFi, and LiFi," *IEEE Commun. Mag.*, vol. 60, no. 2, pp. 73–79, Feb. 2022.
[39] A. Ahmim, L. Maglaras, M. A. Ferrag, M. Derdour, and H. Janicke, "A novel hierarchical intrusion detection system based on decision tree and rules-based models," in *Proc. 15th Int. Conf. Distrib. Comput. Sensor Syst. (DCOSS)*, May 2019, pp. 228–233.
[40] S. Rezvy, Y. Luo, M. Petridis, A. Lasebae, and T. Zebin, "An efficient deep learning model for intrusion classification and prediction in 5G and IoT networks," in *Proc. 53rd Annu. Conf. Inf. Sci. Syst. (CISS)*, Mar. 2019, pp. 1–6.
[41] P. H. Mirzaee, M. Shojafar, Z. Pooranian, P. Asefy, H. Cruickshank, and R. Tafazolli, "FIDS: A federated intrusion detection system for 5G smart metering network," in *Proc. 17th Int. Conf. Mobility, Sens. Netw. (MSN)*, Dec. 2021, pp. 215–222.
[42] U. K. Lilhore, S. Dalal, and S. Simaiya, "A cognitive security framework for detecting intrusions in IoT and 5G utilizing deep learning," *Comput. Secur.*, vol. 136, Jan. 2024, Art. no. 103560.
[43] T. E. T. Djaidja, B. Brik, A. Boualouache, S. M. Senouci, and Y. Ghamri-Doudane, "Federated learning for 5G and beyond, a blessing and a curse- an experimental study on intrusion detection systems," *Comput. Secur.*, vol. 139, Apr. 2024, Art. no. 103707.
[44] *OpenWIPS-ng an Open Source and Modular Wireless IPS*. Accessed: Mar. 3, 2025. [Online]. Available: https://openwips-ng.org/
[45] S. Kahsay, J. Gebresilassie, L. L. Rafferty, Z. Chen, M. Cui, and Abu-Tair, 2023, "Wi-Fi association_disassociation dataset," [Online]. Available: https://github.com/samsonkg/Wi-Fi-Association_Disassociation-Dataset
[46] A. Sultan. (2022). *3GPP TR 21.916 Version 16.2.0 Release 16*. [Online]. Available: https://portal.3gpp.org/desktopmodules/Specifications/SpecificationDetails.aspx?specificationId=3493

CHERIFA HAMROUN received the Engineering degree in computer science from the École Nationale Supérieure d'Informatique (ESI), Algiers, in 2022. She is currently pursuing the Ph.D. degree in computer networks and information technologies with Sorbonne University, Paris, under the supervision of Anne Fladenmuller, Michel Pariente, and Guy Pujolle. Her research interests include computer network security and artificial intelligence, with a special focus on the security of Wi-Fi and 5G networks.

ANNE FLADENMULLER (Member, IEEE) received the Ph.D. degree in computer science from Université Pierre et Marie Curie in 1996. Following a Postdoctoral fellowship at UTS, she became a Lecturer at UTS. In 1998, she joined the Alcatel Research Center before returning to Université Pierre et Marie Curie in 1999, where she was appointed as an Associate Professor and later became a Full Professor at Sorbonne Université. Throughout her career, she has demonstrated a strong dedication to both research and teaching. She has led several research projects and held numerous educational responsibilities. Her expertise encompasses wireless networks, mobility, localization, and synchronization of heterogeneous systems and more recently AI approaches applied to networking.

MICHEL PARIENTE received the Diploma degree in mechanical engineering from the École Centrale de Lyon, in 1973. From 1973 to 1980, he acted as an IT Consultant with the Plasma Physics Department, Nuclear Studies Center, Fontenay aux Roses. In 1980, he co-founded the MPI Tech Group (www.mpitech.com) where he acted as the General Manager and Research and Development Director, from 1980 to 2000. He is currently the President and the Research and Development Director of METEOR Network (www.meteornetworks.com), a wireless operator for public, private, and event Wi-Fi. From 2013 to 2016, he was with METEOR Network, and he supervised the Cifre thesis of Ms. Fatma Ben Jemma (design and optimization of next-generation carrier-grade Wi-Fi networks). He has co-authored five publications related to the simulations of the trajectory and behavior of charged particles inside the plasma of tokamak machines. During this period, he filed four patents related to infrared data transmission, barcode reading, cable multiplexing, and high-speed printer controller.

GUY PUJOLLE (Life Senior Member, IEEE) is currently an Emeritus Professor with Sorbonne University and the President of Green Communications Company. He is a member of the Royal Academy of Sweden in Lund. Before, he was a member of the Institut Universitaire de France, a Distinguished Professor with UFRJ, Brazil, and POSTECH, the Pohang University of Science and Technology, South Korea. He received different prices for his work and publications, in particular the Grand Prix of the French Academy of Sciences, in 2013, and the Ampère Medal, in 2020. He was also a member of the Scientific Advisory Board of Orange, from 1990 to 1998 and from 2002 to 2010, and a member of several scientific advisory boards in the world. He was at the origin of several inventions and important patents, such as DPI, Wi-Fi controller, virtual networks, and metamorphic networks. He is the Editor-in-Chief of *Annals of Telecommunications*, a Springer journal. He was a Co-Founder of QoSMOS (www.qosmos.fr), Ucopia Communications (www.ucopia.com), EtherTrust (www.ethertrust.com), and Green Communications (www.green-communications.fr).