Unit - I

Introduction:-

Definition:-

An Embedded system is an electronic / electro-mechanical system designed to perform a specific function and is combin-ation of both hardware and firmware (software).

* Every embedded system is unique, its hardware and software are highly specialised to the application domain.

General purpose computing system	Embedded system
1. A system combination of generic hardware and general purpose operating system (OS) for executing a variety of applications	1. A system combination of special purpose hardware and embedded OS for executing a specific set of applications
2. Applications are programmable by user.	2. The firmware of embedded system is pre-programmed and it is not alterable by end user
3. Performance is primary factor to decide the efficiency [faster is better].	3. Application-specific requirement are key deciding factors
4. Response requirements are not time critical.	4. The response time is highly critical
5. They are designed for more number of applications	5. These are designed for application specific applications

History:-

In olden days Embedded systems were built around vaccum tube and transistor technology and algorithms used are of "low level languages".

* The first recognised modern embedded system is the "Apollo Guidance computer (AGC)" developed by " MIT instrumentation laboratory" for lunar expedition.
* The clock frequency of first microchip was 1.024 MHz and it is derived from 2.048 MHz crystal clock.
* The first mass-produced embedded system was the guidance computer for the "minute man-1" missile in 1961
* It was "Autonetics D-17" guidance computer built using discrete transistor logic
* The first integrated circuit was produced in 1958 but computers began to used it from 1963.
* Some of the earlier embedded systems are NASA for AGC and by US military in the minute-man II interconti-nental ballistic missile

Classification:-

The different classifications of embedded systems are done by using different criteria's such as:

1. Based on generation
2. complexity and performance requirements

3. Based on deterministic behaviour
4. Based on triggering

Classification based on generation :-

a) first generation :- The early embedded systems were built around 8 bit micro processors like 8085 and 780 and 4 bit micro controllers. simple hardware circuits with firmware developed in assembly code.

EX:- Digital telephone Keypad, stepper motor control etc--

b) Second generation :- These are embedded systems built around 16 bit micro processors and 8 (or) 16 bit micro-controllers. The instruction set for these processors/controllers are much more complex and power full than 1st generation.

EX:- Data Aquisition systems, SCADA systems e.t.c---

[supervisory control & data Aquisition (SCADA)]

c) Third generation :- These are embedded systems built around 32-bit processors and 16-bit micro controllers for their design. A new concept of application specific and domain specific processors / controllers like digital signal processor (DSP) and Application specific IC's (ASIC's) came into existance. pipelining concepts are introduced making instruction set more complex. processors like Intel, pentium, motorola 68K e.t.c.. gained attention in high performance embedded requirements

Fourth generation:- The advent of system on chips (SoC) reconfigurable processors and multi-core processors increased the speed and miniatured the size of embedded systems in market. System on chip technique implements a total system on chip by integrating different functionalities with a processor core on an IC. They uses high performance RTOs for functioning

Ex:- Smart phones, mobile internet devices (MID's) etc..

Classification based on complexity and performance:-

Small scale embedded system:- These are usually built around low performance and low cost. 8 (or) 16-bit micro processors | microcontrollers. It may (or) may not contain operating system for its functioning.

Ex:- electronic toy, A battery remote control for TV etc..

Medium-scale embedded system:- Embedded systems which are slightly complex in hard-ware and firmware requirements falls under this category. These are usually built around 16 (or) 32-bit microprocessors (or) controllers It contains an embedded operating system for functioning

large-scale embedded system:- They have high complex hardware and firmware. These are built around 32 (or) 64-bit RISC processors / controllers (or) reconfigurable

System on chip (RSOC) (or) multi-core processors and programmable logic devices. They have RTOS for task scheduling, prioritization and management. (3)

Ex:- Decoding | encoding media, crytographic function implementation e.t.c--

Based on deterministic behaviour:-

It is applicable for 'Real time systems'. Based on execution behaviour embedded systems are classified as hard and soft.

Based on triggering:- Embedded systems which are reactive in nature can be classified based on the trigger. Reactive Systems can be either event triggered (or) time triggered.

Application areas:-

1. Consumer electronics:- camcorders, cameras, voice recorders e.t.c--
2. House hold appliances:- Tv, DVD players, washingmachine, fridge, micro oven e.t.c--
3. Home Automation: and security systems - Air conditioner, sprinklers, intruder detection, alarms, closed circuit Tv cameras, fire alarm e.t.c---
4. Automotive Industry:- Anti-lock breaking system (ABS), engine control, ignition system, Automatic navigation systems e.t.c---

5. Telecom:- cellular telephones, telephone switches, handset multi-media applications e.t.c--

6. computer peripherals:- printers, scanners, fax machines e.t.c--

7. Health care:- Brain tumour scanner, EEG, ECG machines e.t.c--

8. computer networking systems:- Network routers, switches, hubs, firewalls e.t.c--

9. Measurement and instrumentation:- Digital multimeter, Digital CRO's, logic analyzer, PIC systems e.t.c--

10. Banking and retail:- Automatic teller machine (ATM), currency counter, point of sales (POS)

11. Card readers:- Bar code, smart card readers, hand held devices e.t.c--

Purpose of Embedded System:-

Each embedded system is designed to serve the purpose of anyone (or) combination of the following:-

1. Data collection / storage / Representation
2. Data communication
3. Data (signal) processing
4. Monitoring
5. control
6. Application specific user interface

1. Data collection | storage | representation :-

* Data such as video, audio, text, image, electrical signal or any other measurable quantity. It can be analog (or) digital.
* The data collection performs aquisition of data from the external world.
* Embedded systems which collect the analog (continuous) data, collection mechanism involves in conversion of analog to digital for this purpose a A/D converter and then binary equivalent of the analog data is collected.
* Embedded system which collect digital (discrete) data, it can be directly captured with out any additional interface.
* collected data may (or) may not be stored in the system. It may be transmitted to other system.
* Embedded systems designed for pure measurement without storage, used in control and instrumentation domain.

  Ex:- Analog and digital CRO's without storage
* Some systems stores the data collected for processing and analysis

  Ex:- LCD, buzzers, alarms, LED display units e.t.c..
* A digital camera is a typical example for data collection | storage | Representation.
* Images are captured and may be stored with in the memory of camera. The captured image can be ~~processed~~ presented to the user through a graphic LCD unit.

Data communication:-

* The collected data must be transfered to some remote location. The transmission is achieved by a wire-line medium or by a wire-less medium.
* wire-line medium was used in olden days, wire less systems are of much interest now-a-days.
* wire-less medium offers cheap connectivity solutions and make the communication link free from wired bundles.
* Data can be either analog / digital
* The data collecting instrument itself may contain data communication units like wireless modules (Bluetooth, zigbee, wi-fi, EDGE, GPRS e.t.c--) or wireline modules (RS-232C, USB, TCP/IP etc--)
* certain embedded systems acts as didicated transmission unit between sending and receiving terminal.

  Ex:- Switches, hubs, routers e.t.c--
* They act as mediators in data communication and provide various features like data-security, monitoring e.t.c

Data (signal) processing:-

* The data collected by the embedded system might be used for various kinds of data processing.
* Embedded systems with signal processing functionalities are employed in applications demanding signal processing like speech coding, synthesis, Audio-Video codec, transmission applications e.t.c--

Example:- A digital hearing aid is a typical example of an embedded system employing data processing. It improves the hearing capacity of hearing imparied persons.

Monitoring:-

* All the medical embedded product will come under this category.
* They are used for determining state of some variables using input sensors.
* They cannot impose control over the variable.

Ex:- ECG (Electro cardiogram) for monitoring heart beat of a patient

* The ECG is intented to monitor the patients heart beat but it cannot have any control over heart beat.
* The sensors used in ECG are different electrodes connected to the patients body.

Ex:- digital CRO, digital multimeters, logic analyzers e.t.c

* They are used for knowing (monitoring) the status of variables like current, voltage e.t.c --

Control:-

* Embedded systems with control functionalities impose control over some variables according to the changes in input variables
* A system with control functionality has both sensors and actuators

* Sensors are connected to the input port for capturing the changes in measuring variable.

* Actuators connected to the output port are controlled according to the changes in input variable and brings them to specified range.

Application specific user interface :-

* There are embedded systems which are application specific user interfaces like buttons, switches, keypad, lights, bells, display units e.t.c

* Mobile phone is one of the example. In mobile phone the user interface is provided through a keypad, graphical LCD, module, system speaker, vibration alert e.t.c..

* Smart running shoes are another example launched by Adidas

* The shoe constantly adapts its shock absorbing characteristics to customise its value to the individual runner, depending on the running style, pace, body we-ight, and running surface.

Typical Embedded System :-

A typical embedded system contains :-

1. A single controller chip

2. input ports
3. output ports
4. communication interface
5. Embedded firmware
6. Memory

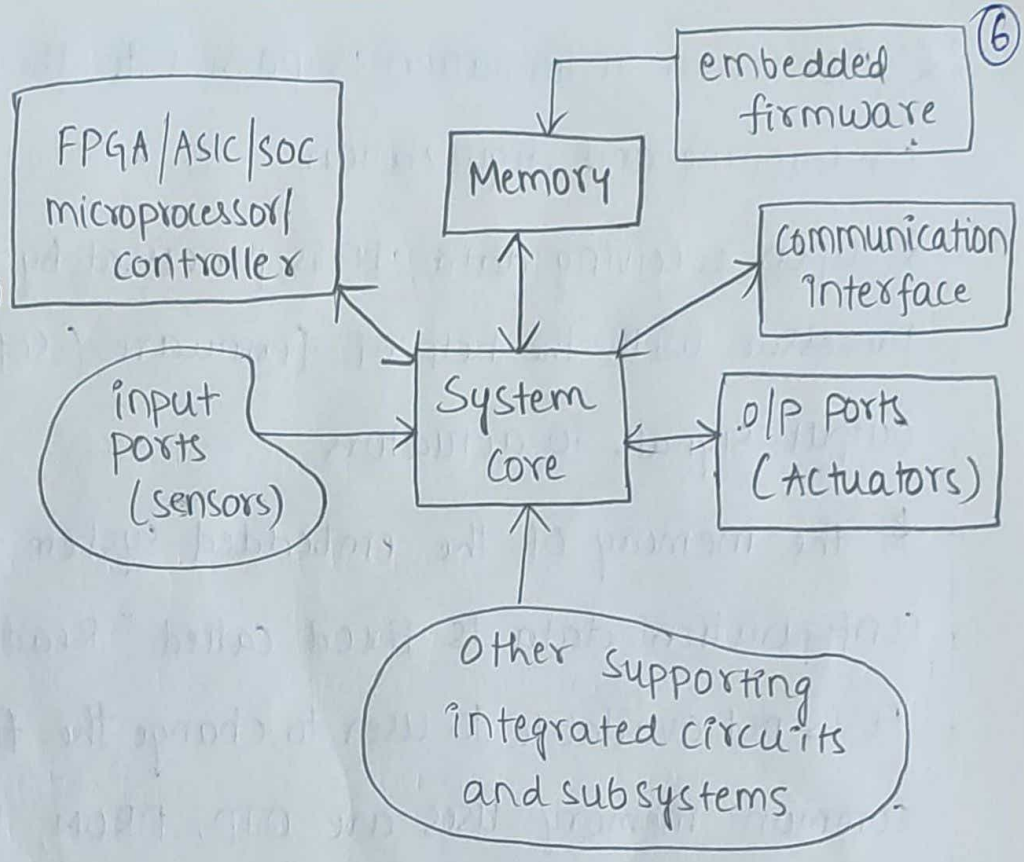

fig:- elements of embedded system

Operation:-

* The controller can be microprocessor (or) microcontroller (or) field programmable Gate Array (FPGA) device (or) a digital signal processor (or) an Application specific IC (ASIC) (Or) an Application specific standard product (ASSP)

  Ex:- 8085 µp, Atmel AT89C51 µc, xilinx spartan e.t.c

* Embedded systems by using hardware/software control the physical variables by providing control signals to the actuators (or) the devices connected to the output ports of the system.

* The control is achieved by processing information coming from sensors and user interfaces.

* Examples for user interface output devices are LED's, LCD's, picto electric buzzers e.t.c..

* The sensor information is passed to the processor after conditioning and digitization.

* upon receiving data, it is processed by the controller (or) Processor with the help of firmware (software) and sends output signals to actuators

* The memory of the embedded system for storage of configuration data is fixed called "Read only memory" (ROM). It is not available to user to change the fixed data. Most common memory uses are OTP, PROM, UVEPROM, EEPROM and Flash.

* Depending upon the application the memory size varies to perform arithmetic operations and control algorithms execution Random access memory (RAM) is used as "working memory". Ex:- SRAM, DRAM, NVRAM e.t.c..

Core of the Embedded system

- general purpose & domain specific processors
  - microprocessors
  - micro controllers
  - Digital Signal processors
- Application Specific integrated circuits (ASIC's)
- Programmable logic devices (PLD's)
- Commercial Off-the-Shelf components (COTS)

1. General purpose and domain-specific processors :-

* 80% of embedded systems are processor / controller based systems.
* Most of the industrial applications uses a microprocessor (or) a micro controller for control and monitoring
* But the domains such as speech coding, speech recognisation, e.t.c -- requires a digital signal processor.

a) Microprocessors :-

* A microprocessor is a silicon chip consisting of memory unit, control unit and ALU (Arithmetic & logic unit)
* It works along with the other hardware like memory, timer unit and interrupt controller e.t.c --
* The 1st microprocessor was developed by intel, named intel 4004, a 4-bit processor released on 1971.
* It contains 1K data memory, 12-bit program counter, 4K program memory, 16 4-bit general purpose registers, and 46 instructions, with 740KHz clock frequency.
* In 1972, 14 more instruction were added named Intel 4040.
* Then Intel 8008 with 14 bit wide program counter.
* In 1974, intel launched first 8-bit processor Intel 8080, with 16-bit address bus and program counter and 8-bit registers.
* Then motorola launched processor named motorola - 6800.

* In 1976, Intel upgraded processor version of 8080 - 8085, with two namely added instructions, with three interrupt pins and serial I/o clock and bus controllers are built-in with power supply ±5V.

* Today the clock speed of processors is around 2.4 GHz with 16, 32 and 64 bit processors are available with high speed, high performance and low cost.

* Harvard and Von-Neumann are two different architectures for processor design.

* Reduced Instruction set computing (RISC) and complex instruction set computing (CISC) are two common instruction sets architectures (ISA).

* Harvard architecture contains seperate buses for program memory and data memory where as processors based on Von-Neumann architecture shares single system bus for program and data memory.

(b) Micro controller:-

* A micro controller contains cpu, scratch pad RAM, special and general purpose register arrays, on chip ROM / flash memory for program storage, timer, Interrupt control and dedicated I/o ports.

* A microcontroller can be considered as superset of microprocessor.

* Texas instruments 'TMS 1000' is the world's first micro controller.

* It is followed by 4004 / 4040 by adding extra RAM & ROM & I/o ports on single chip with a provision to add custom instructions to CPU, was released in 1974.

* In 1974, intel launched microcontroller family named MCS-48 family. The processors came under it are 8038 HL, 8039 HL, 8040 AHL, 8041 H, 8049 H & 8050 AH

* During 1980-90's, 8051 μC came into existence with low cost, wide availability, memory efficient instruction set e.t.c--

* Intel-8051 μC is an example of both general purpose and application specific instruction set processor. whereas Atmel processor (AVR) is an application specific controller designed to control automotive domain.

Microprocessor	Microcontroller
* It is a silicon chip representing central processing unit (cpu), which is capable of performing arithmetic and logical operations according to the predefined instruction set.	* It is a highly integrated chip that contains a cpu, scratch pad RAM, special and general purpose register arrays, on chip ROM/ flash memory for program storage, timer and interrupt control units with dedicated I/o ports
* Mostly used in general purpose in design and operation	* Mostly application-specific (or) domain specific operation

* It is a dependent unit which requires combination of other units like timers, interrupt controllers e.t.c--	* It is self contained unit and does not require external units for its functioning
* Does not contain I/O ports.	* They contain 8 (or) 16 (or) 32 bit ports (or) as individual port pins.
* performance is an important factor	* speed and accuracy are important factors
* High cost due to more number of applications.	* Low cost because of application specific usage
* Off-chip memory	* on-chip memory

Digital signal processor (DSP) :-

A DSP is a special purpose 8/16/32 bit micro processor designed specifically to meet the Computational demands and power constraints of embedded audio, video and communications applications. DSP's are much faster than general purpose microprocessors in signal processing applications.

Typical digital signal processor contains :-

a) program memory :- memory for storing the program required by DSP to process data.

b) data memory :- working memory for storing temporary

Variables and data / signal to be processed.

c) computational engine:- It performs signal processing in accordance with the stored program memory. It incorporates many specialized arithmetic units and each of them operates simultaneously to increase the execution speed.

d) I/o unit:- It acts as interface between outside world and DSP. It is responsible for capturing signals to process and delivering the processed signal.

RISC VS CISC:-

(RISC) Reduced Instruction Set Computing	(CISC) Complex Instruction set Computing
* Less no. of instructions	* more no. of instructions
Instruction pipelining and increased execution speed.	No pipelining feature
* Operations are performed on registers only, the only memory operations are load & store.	* Operations are performed on registers or memory depending upon instruction.
* orthogonal instruction set.	* It is instruction specific and non-orthogonal
* Large number of registers are available	* limited number of registers are available
* Single, fixed length instruction	* Variable length instruction
* with Harvard architecture	* with Harvard (or) Von neumann

Harvard Vs Von-Neumann Architectures :-

Harvard Architecture :-

It uses seperate buses for instruction and data fetching

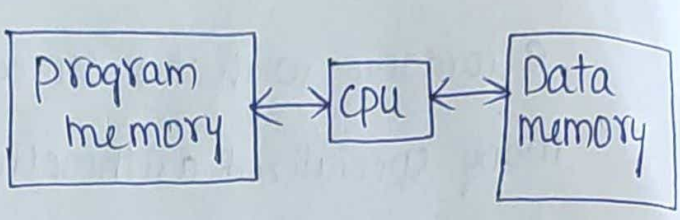

Von-Neumann Architecture :-

Single shared bus for instruction and data fetching

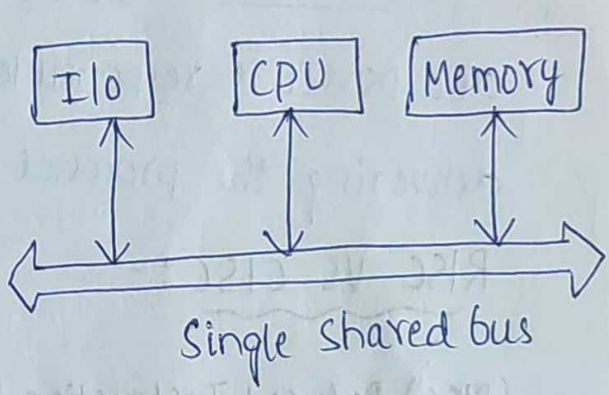

Harvard Architecture	Von-Neumann Architecture
1. Seperate buses for instruction and data fetching.	1. Single shared bus for instruction and data fetching.
2. Easier to pipeline, so high performance can be achieved.	2. low performance due to sharing of single bus.
3. Comparitively high cost	3. low cost
4. No memory alignment problem	4. Allows self modifying codes.
5. Since data memory and program memory are stored in different locations no chances for accidental corruption of program memory.	5. Since data and program memory are stored in single chip, chances for accidental corruption of program memory.

Application specific Integrated circuits (ASIC's):-

* It is a micro-chip designed to perform a specific (or) unique application.
* It integrates several functions into a single chip, which reduces the system development cost.
* ASIC's are pre-fabricated for a special application (or) they can be custom fabricated by using components from "building block" library of components which are re-usable for particular application.
* For an ASIC a non-refundable one time investment called Non-Recurring engineering charges (NRE) requires, hence an application specific IC is used by single manufacturer.
* where as an application specific standard product (ASSP) is made openly available in market, which is marketed to multiple customers.

Programmable logic Devices (PLD's):-

* Logical devices provide specific functions including device-to-device interface, data communication, signal processing, data display, timing & control operations.
* fixed logical devices once manufactured, they cannot be changed.

fig:- Logic devices types

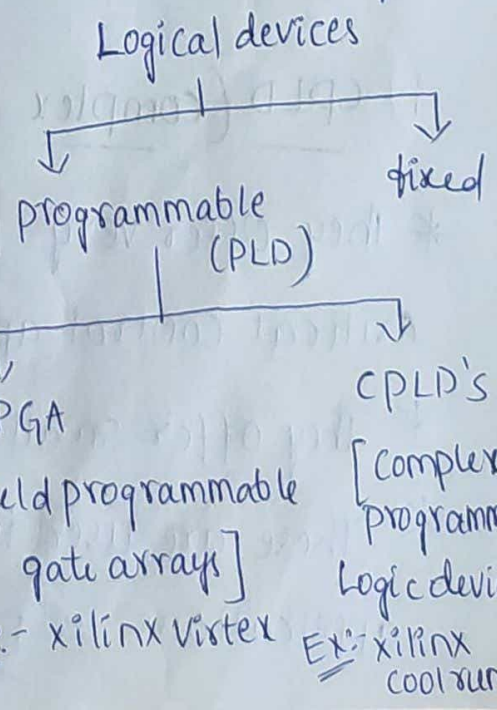

Programmable logic devices (PLD):-

* These are re-configurable devices which can perform number of functions at a time with wide range of logic capacity, speed and Voltage characteristics.
* A PLD, designers use inexpensive software tools to develop, simulate and test their designs.
* Then the device is programmed by the designs and tested in live circuits.
* There is no NRE (Non-recurring Engineering charges) cost and the final design is completed much faster.
* During the design of the device the customers can change the circuitary as often as they want until it is satisfactorily designed.
* This is possible by using re-writable memory technology.
* The two major types of PLD's are 1. CPLD
  2. FPGAs

1. CPLD (complex programmable logic devices):-

* They offer very predictable timing which are used in critical control applications
* They offer small amount of logic gates upto 10,000 gates.
* These are used in hand held devices and portable applications Ex:- Cool runner

FPGA (Field programmable gate array) :-

* They offer high amount of logic density, the most features and high performance.
* They have large design logic gates of order of 8-100 million gates.
* They offer built-in processors (Ex:- IBM powerpc), enough memory, clock-management systems, and support for many latest, very fast device-to-device signalling technology.
* They are used in wide range of applications, ranging from data processing and storage, to instrumentation, telecommunication and digital signal processing.

Commercial off-the shelf components (COTS) :-

* A commercial off-the shelf product is one in which is used in such a way that it can easily integrate and interoperate with existing system components.
* Example of COTS are control units of a toy car like RF circuitary part, electro-optic IR imaging arrays, UV/IR detectors e.t.c--
* The advantage of COTS are they are readily available in market cheap, and the developer of embedded system need not to develop these components by which development time can be minimized.

Memory:-

It is an important part of a processor/controller based embedded system. Some of the processors/controllers have built in memory and it is called chip memory. External memory connected to store control algorithms is called off-chip memory.

Program Storage Memory (ROM):-

1. Masked ROM (MROM):-

* It is one time programmable device.
* It is used hard wired technology for storing data.
* It is factory programmed by masking and metalization process at the time of production itself, according to the data provided by the end user.
* MROM is good for storing the embedded firmware for low cost embedded devices.

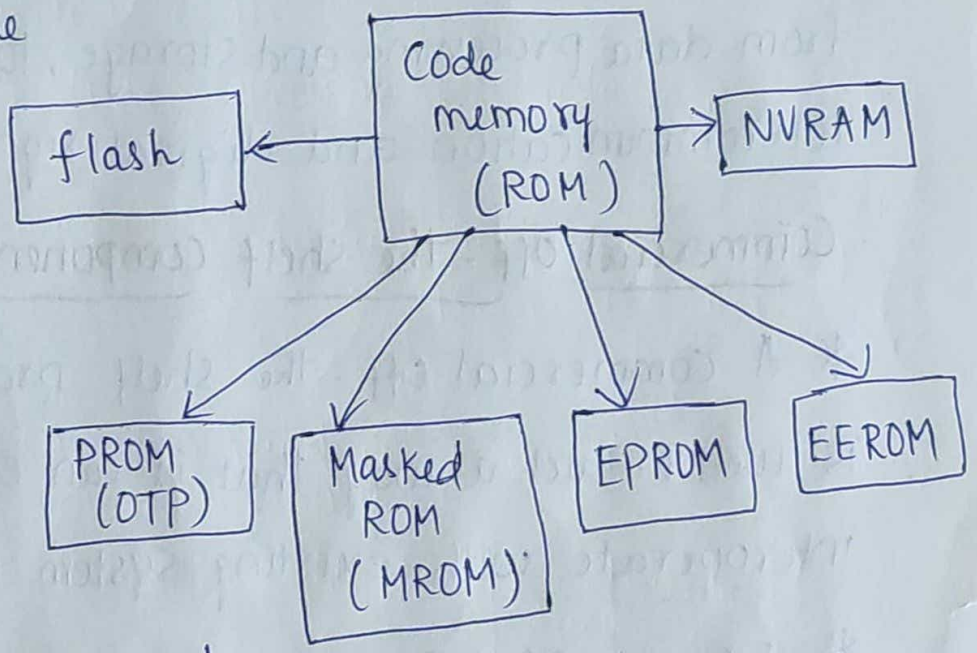

fig:- classification of program memory

* Its drawback is inability to modify the firmware of device against upgrades.
* once programmed and stored in bit storage, it is not possible to alter the bit information.

2. Programmable Read only memory (PROM) / OTP:-

* It is not pre-programmed by the manufacturers the end user is responsible for programming these devices. One time programmable devices are widely used in commercial purpose of embedded systems whose prototype versions are proven and the code is finalized. we cannot re-program the device once it is programmed.

3. Erasable programmable read only memory (EPROM):-

It gives the flexibility to re-program on the same chip. EPROM chip is flexible in terms of its re-programability, it needs to be taken out of the circuit board and put in UV eraser device for 20 to 30 minutes.

4. EEPROM:-

The information contained in the EEPROM memory can be altered by using electric signals at the register / byte level. They can be erased and reprogrammed in circuit. These chip include a chip erase mode and this mode they can erase in few milli seconds.

5. Flash :-

It is the latest ROM technology. Flash memory is a variation of EEPROM technology it combines the reprogramability of EEPROM and the high capacity of Standard ROM's. It stores the information in an array of floating gate MOS-FET transistors.

6. NVRAM (Non-Volatile RAM) :-

It is a random access memory with battery backup. It consists of static ram based memory and battery for providing supply to battery in the absence of external power supply. The life of NVRAM is around 10 years.

Read/write Memory (or) random Access memory (RAM) :-

A RAM is a volatile memory i.e. when power is turned-off all the contents are destroyed.

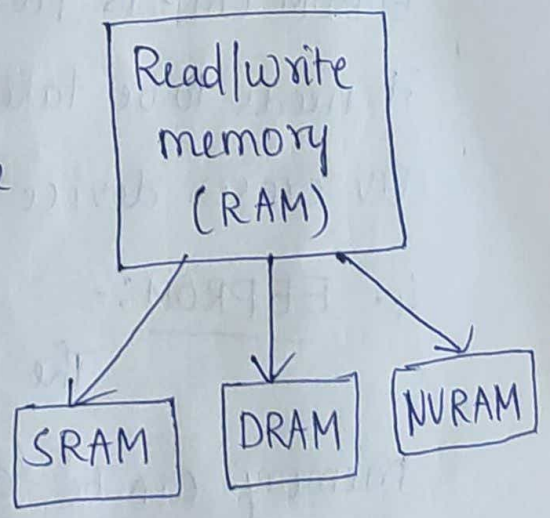

1. Static memory (SRAM) :-

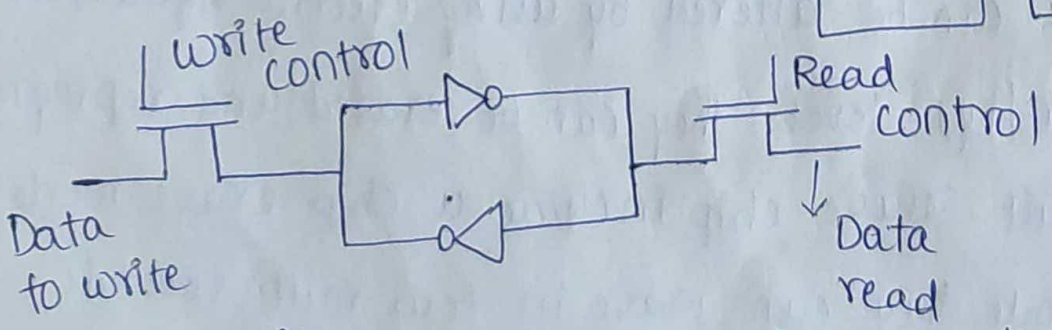

fig:- Visualization of SRAM cell.

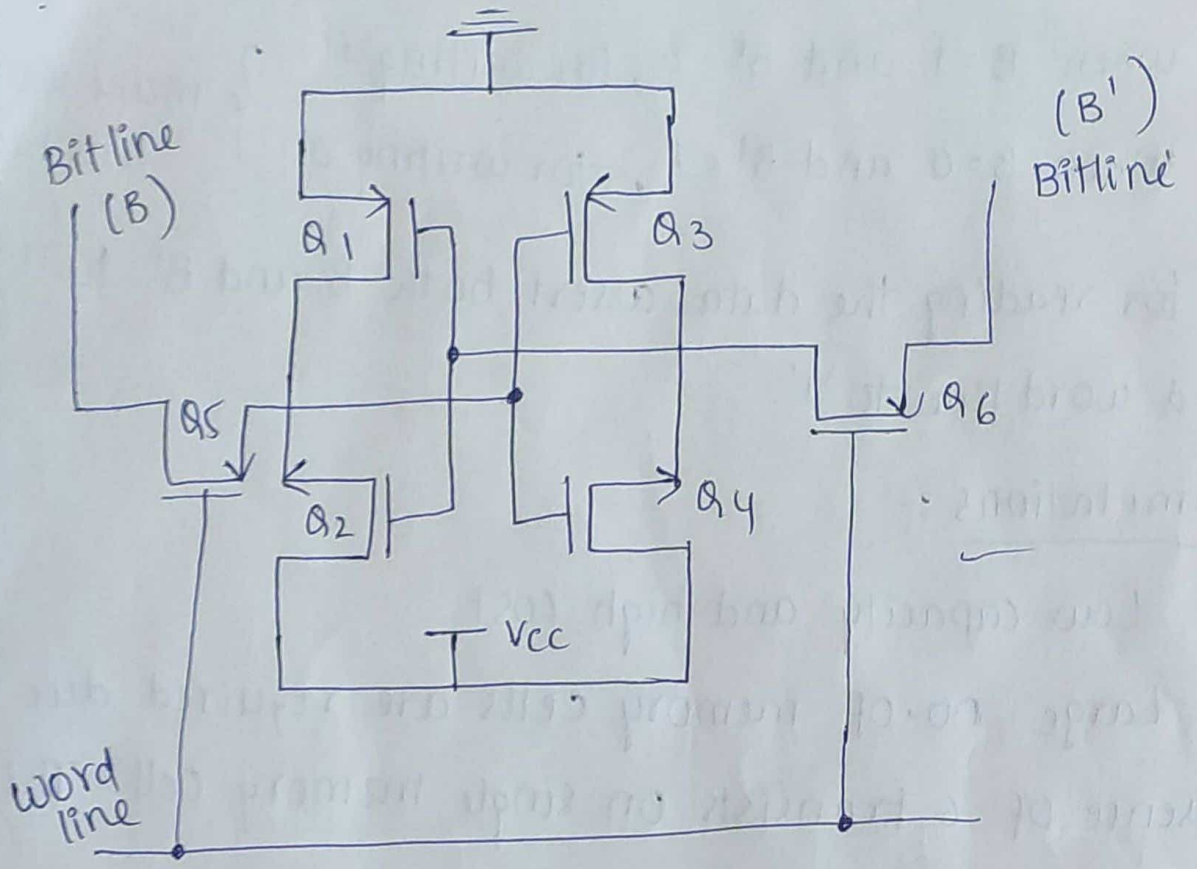

fig b:- SRAM cell implementation

Static RAM stores the data in the form of voltage. They are made up of flip flops. Static form of RAM is faster form of RAM available. An SRAM cell is realized using 6 transistors. 4 of the transistors are used as latch (flip flop) part of the memory cell and two for controlling the access. SRAM has high resistive network and switching capability.

* An SRAM in fig (b) ~~and~~ can be visualized in fig (a), with two cross coupled inverters with read/write control through transistors.

* Q_5 and Q_6 are access control transistors which are

connected to bit line B and B' respectively.

* when B = 1 and B' = 0, for writing '1'.
  when B = 0 and B' = 1, for writing '0'
  } make word line high

* for reading the data assert both B and B' to '1' and word line to '1'.

Limitations :-

* Low capacity and high cost
* Large no. of memory cells are required due to presence of 6 transists on single memory cell. This increases the size of memory device.

D-RAM (Dynamic RAM) :-

It stores data in the form of charge. They are made up of a MOS transistor and a capacitor. It is high dense and low cost RAM. It requires refreshing of data.

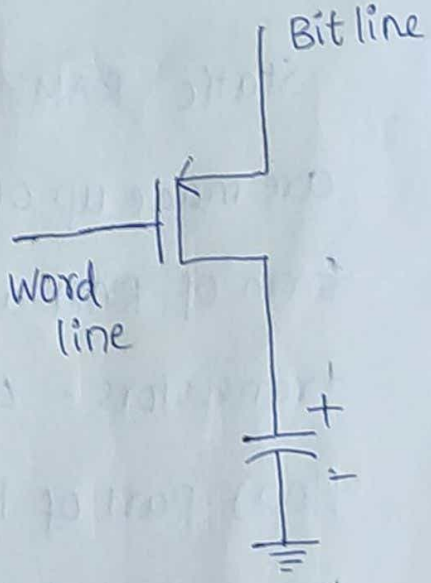

fig:- DRAM cell

* To avoid leakage of charge with time, the memory should be refreshed periodically.
* Special DRAM controllers are used for this purpose.
* The MOSFET acts as a gate ~~capacitor~~ for incoming and out going data and capacitor acts as a storage device.

Sensors & Actuators :-

Sensor :- It is a transducer which converts one form of energy to another form for measurement purpose (or) for control.

* Sensors are connected to the input ports of embedded systems.

Actuator :- It is a form of transducer which converts signals to corresponding physical action (motion).

* Actuators are connected to the output ports of embedded systems.

The I/O subsystem :-

It facilitates the embedded system interact with external world.

* Sensors cannot be directly connected to input ports, they must be interfaced through signal conditioners and translating systems like ADC, opto couplers etc--

LED (Light emitting diode) :-

It is an important output device for visual indication. It can be used as an indicator for various signals (or) situations

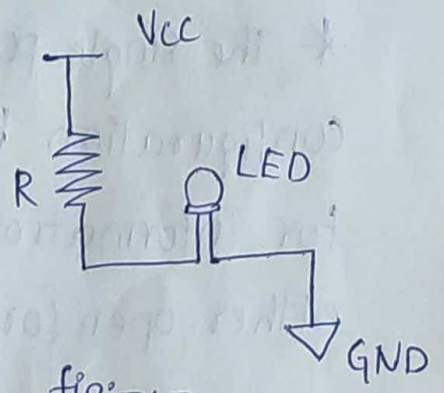

fig:- LED interfacing

7 Segment display :-

The 7-segment LED display is an output device for displaying alpha numeric characteristics. It contains 8 light emitting diode segments arranged in a special form.

Out of 8 LED's 7 are used for display alpha numeric character and one is used for decimal point.

Relay :-

It is an electromechanical device. It consists of relay coil made up of insulated wire on a metal core and a metal armature with one (or) more contacts. It works on electromagnetic principle.

When voltage is applied to relay coil current flows through coil, which inturn generates magnetic field. The magnetic field attracts the armature core and moves the contact point.

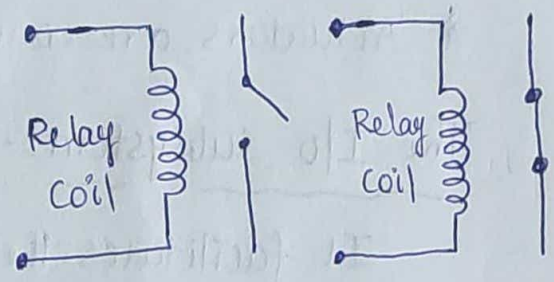

a) single pole single throw normally open

b) single pole single throw normally closed.

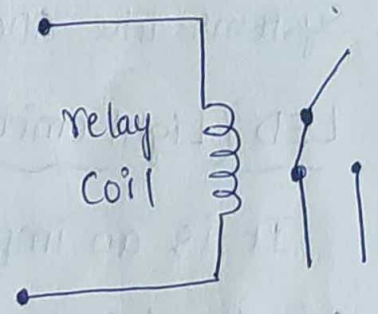

c) single pole double throw

* The single pole single throw configuration has only one path for information flow. The path either open (or) closed.

* for single pole double throw relay there are two paths for information flow and they are selected by energising (or) de-energising the relay.

Communication interfaces :-

These are divided into two types.

1. Device | on board level communication interface.
2. product level communication interface.

1. On board communication interface :-

Inter integrated circuit (I2C) bus :-

It is a synchronous bi-directional half duplex two wire serial interface bus. The I2C comprises of two bus lines, serial clock - SCL and serial data - SDA

SCL → To generate synchronized clock pulses.

SDA → Responsible for transmission of data serially.

* Devices connected to I2C bus can act as master | slave device, the master device is responsible for controlling the communication by initiating | terminating data transfer, sending data (or) clock pulses.
* slave devices for commands from the master.

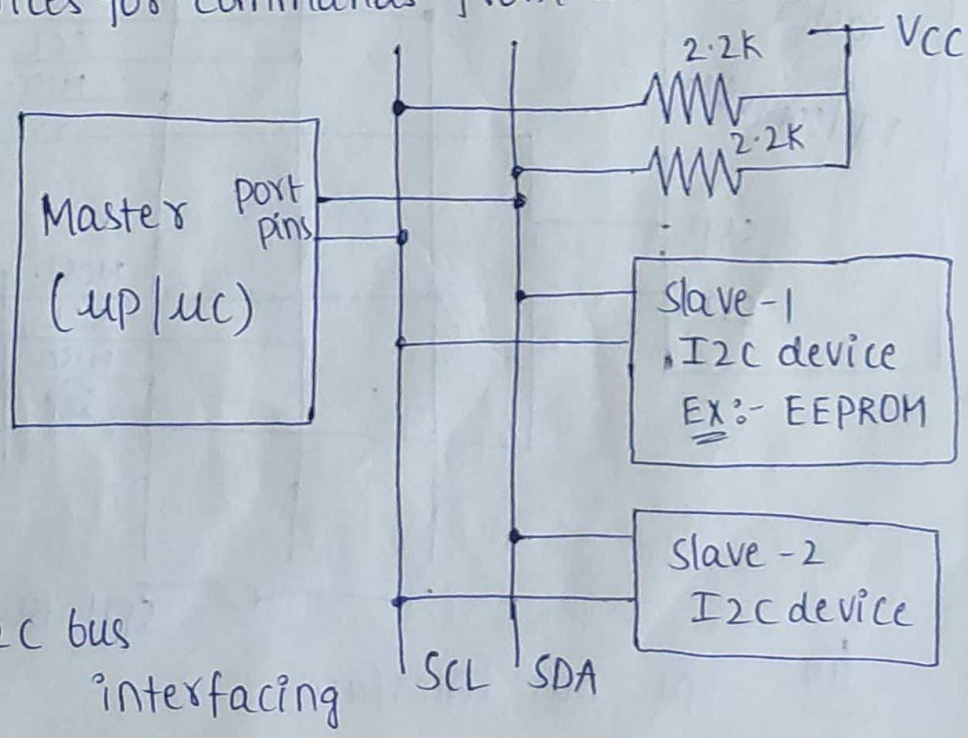

fig:- I2C bus interfacing

Serial Peripheral Interface (SPI) Bus :-

* It is synchronous bi-directional, full duplex, four-wire serial interface bus. It is single master and multi-slave system. It requires 4 signal lines for communication.

Master out slave In (MOSI) :- Signal line carries the data from master to slave device. It is known as slave In | slave data in (SDI).

Master In slave out (MISO) :- Signal line carries the data from slave to master device. It is known as slave out | slave data out.

Serial clock (SCLK) :- Signal line carrying the clock signals.

Slave select (SS) :- Signal line for slave device select. It is active low.

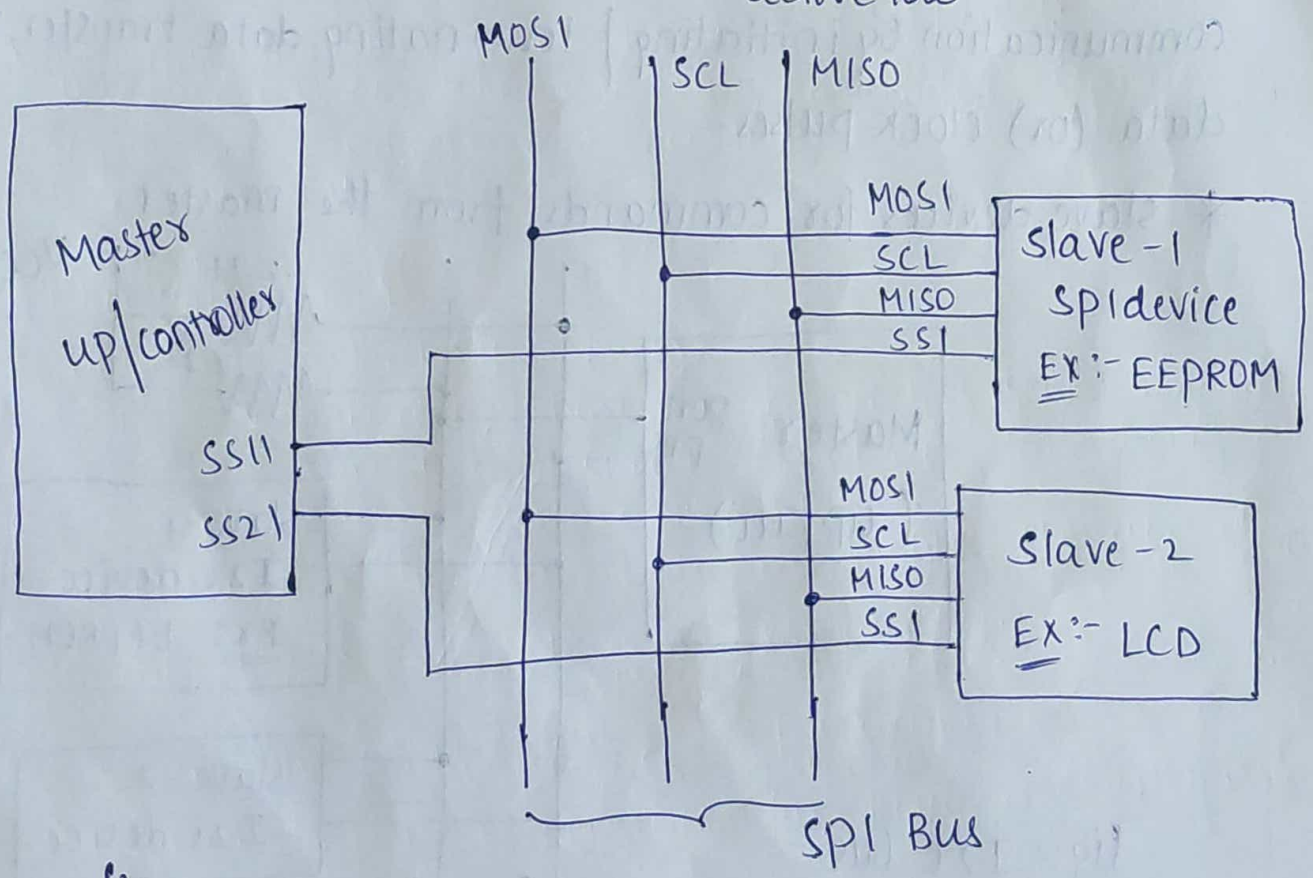

fig:- SPI bus interface

Universal Asynchronous Receiver transmitter UART :-

UART based data transmission is an asynchronous form of serial data transmission. It doesnot require a clock signal to synchronize the transmitting and receiving end for transmission. Sending byte of data, a start bit is added first and a stop bit is added at the end of the bit stream.

The start bit informs the receiver that a data byte is about to arrive. UART of the receiving device calculates the byte received and compares it with the received parity bit for error checking.

External communication Interface :-

1. RS-232 & RS-485 [Recommended Standard - 232] :-

It is a legacy, full duplex, wired, asynchronous serial communication interface. RS-232 interface is developed by electronic industries association. RS-232 extend UART communication signals for external data communication.

2. Universal serial bus (USB) :-

It is wired high speed serial bus for data communication. The first USB (USB 1.0) was released in 1995. It follows star topology with a USB host at the centre and one (or) more USB peripherals connected to it.

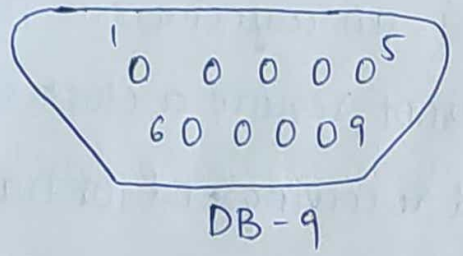

fig:- RS-232 interface.

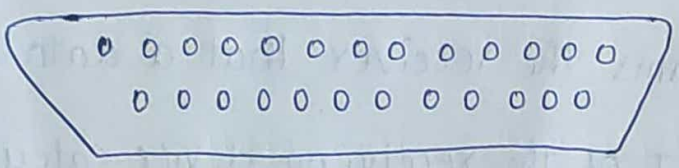

fig:- DB-25, RS-232 interface

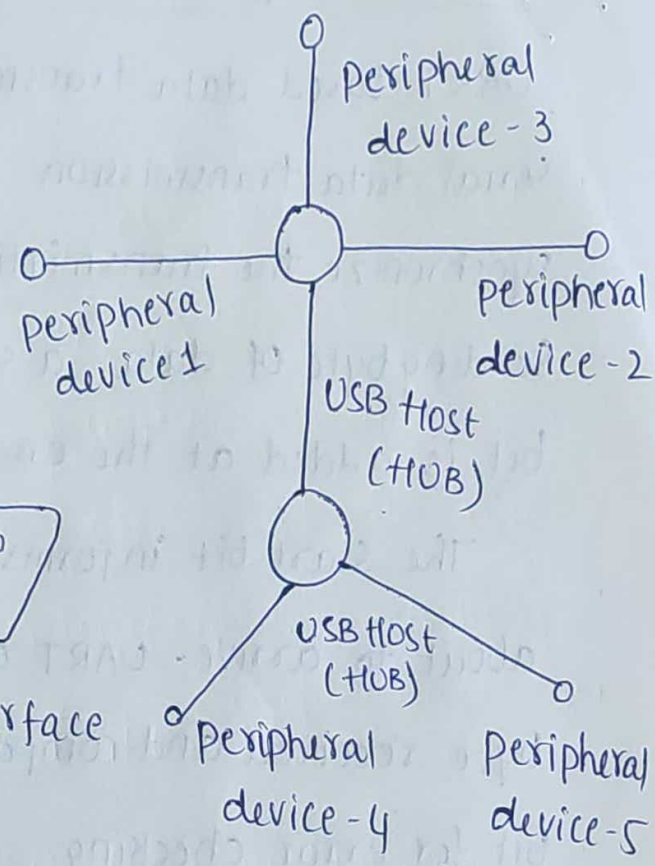

fig:- USB device connection topology

IEEE 1394 (fire wire):-

It is a wired high speed serial communication bus. It is an interface for connecting embedded devices like camera, camcoder, scanner to desktop computer.

Bluetooth (BT):-

It is a low cost, short range wireless technology for data and voices communication. It operates at 2.4GHz of RF spectrum. It has two essential parts

1. physical link 2. protocol link

1. physical link is responsible for physical transmission of data between devices.

2. protocol part is responsible for defining the ruler of communication.

Wifi :-

wireless fidility is the popular wireless communication technique for networked communication of devices. It supports internet protocol (IP) based communication. wi-fi operates at 2.4 GHz to 5 GHz radio spectrum. It requires a wifi rater to communicate between the systems

General packed radio service (GPRS) :-

GPRS is a communication technique for transfering data over a mobile communication network like GSM. Data is sent as packets in GPRS communication.

Embedded firmware :-

It refers to control algorithm and configuration settings that an embedded system developer dumps into the code memory of embedded system.

There are various methods available for developing the embedded firmware.

① write a program in high level languages like embedded C/C++ using an IDE (integrated development Environment). IDE's are different for different processors/controllers.

② write the program in assembly language using instructions supported by your applications target processor

Characteristics of embedded Systems :-

1. Application and domain specific :-

Embedded systems are used for the specific application only i.e they cannot be used for any other purpose.

Ex:- The embedded control units of Air conditioner (AC) and microwave oven are specifically designed to perform certain specific task.

2. Reactive and real times :-

Due to the presence of sensors connected to input ports any change in the external world is sensed by them and according to the change the real time control algorithms are applied to bring controlled variables to designed level.

Ex:- flight control system, anti breaking system in automobiles.

3. operates in harsh environment :-

An embedded system can be placed in dusty (or) harsh (or) high temperature zone by properly designing all these constrains. Irrespect of cost high graded components are used to handle in worst environment condition.

4. Disturbed :-

An embedded system may be a part of larger systems. It has to work along with other different embedded systems. In such disturbed conditions also an embedded function has to function properly without any variation.

Ex:- Automatic vendor machines contains card reader, a vending unit e.t.c.. ATM (Automatic teller machine) contains card reader, transaction unit, currency count unit and printer unit.

5. Small size and weight :-

Compactness is a significant and dedicating factor in design of an embedded system. Most of the applications demand small size and low weight products.

6. Power concerns :-

An embedded system is designed in such a way to minimize the heat dissipation by the system. The production of high amount of heat demands coding requirements like coding fans which inturn occupies additional space and makes system bulky.

Quality Attributes of embedded System :-

These are classified into two types :-

1. operational quality attributes
2. Non-operational quality attributes

Operational Quality attributes:-

1. Response 2. Throughput 3. Reliability 4. Security 5. maintainability 6. safety.

1. Response:-

It is measure of Quickness of the system. Any response delay in the system will create potential damages to the safety and embedded systems and humans working on it. It is not necessary that all the embedded systems should be real time in response

Ex:- Electronic toy need not have any time critical response

2. Throughput:-

It is efficiency of the system. It is defined as the rate of production (or) operation of a defined process over a stated period of time. In case of a card reader the through put is measured in terms of no. of transistors per minute, It can perform. It is used to compare the embedded system performance with other products.

3. Reliability:-

Mean time between failures (MTBF) and mean time to repair (MTTR) are the terms used to define reliability. It is a measure of how much % we can relay up on an embedded System (or) what % is susceptability of the system to failures.

4. Security:- confidentiality, integrity and availability are three major measures of information security. Confidentiality deals with the protection of data from un-authorised users. Integrity deals with un-authorised modifications eradication. Availability deals with protection of data from unauthorized.

Ex:- PDA (personal digital Assistant) - Read only access to all users provides Integrity, some of the files are accessible by administrator only which provides confidentiality providing username and password to access is provided by availability.

5. Maintainability:-

It deals with the maintainance and support to the end usermaintainance can be two types. Scheduled (or) Periodic maintainance (or) maintainance to unexpected failures. Ex:- printer.

6. Safety:- It deals with the possible damages that can happen to the operators, public and environment due to break down of embedded system (or) due to emission of radio active materials from an embedded system. Break down may occur due to hardware failure (or) software failure. some of safety threats are sudden (like product breakdown) and some are gradual (like hazardous emission of from the product).

Non-operational quality attributes

1. Testability
2. Evolvability
3. postability
4. Time to prototype and market
5. pre-unit and total cost.

1. Testability (debugability):-

It is a verification of embedded design hardware which can function a specific task for the written firmware init. Debugging can be done at two levels. hardware level debugging which is used to clear the errors in hardware where as firmware level debugging is to clear the errors in programming.

2. Evolvability:-

The ease with which an embedded product can be modified to take advantage of new firmware and hardware technologies.

3. portability:- (system independent ness measurement):-

The flexibility of firmware and hardware of the embedded systems to adopt according to the different working environmental conditions. For example an application developed on JAVA can be worked on any operating system that supports JAVA settings. But

microsoft visual C++ uses visual studio which cannot run on other operating systems except microsoft platforms.

4. Time to prototype and market :-

The time between the conceptualization of product and time at which the product is ready for selling. Embedded market is highly competative and time to market the product is critical factor in success of embedded project. The embedded project should have limited prototype time to enter the market long time leads to change in the technology in the market.

5. pre unit and total cost :-

cost is monitoring factor for both end user and product manufacturer. The budget and total system cost must be properly balanced to achieve profit. During design and development there is only investment no return. once product is ready to sell is introduced into market. Initially the sales of the product is low but steadly they increase. After that due to heavy competition again there may be some fluctuations in declining the cost of product.

Application specific embedded systems :- (Ex:- washing machine)

An embedded system contains sensors, actuators, control unit and application specific user interfaces like keyboards, displaying units e.t.c.. we can see all these components in washing machine.

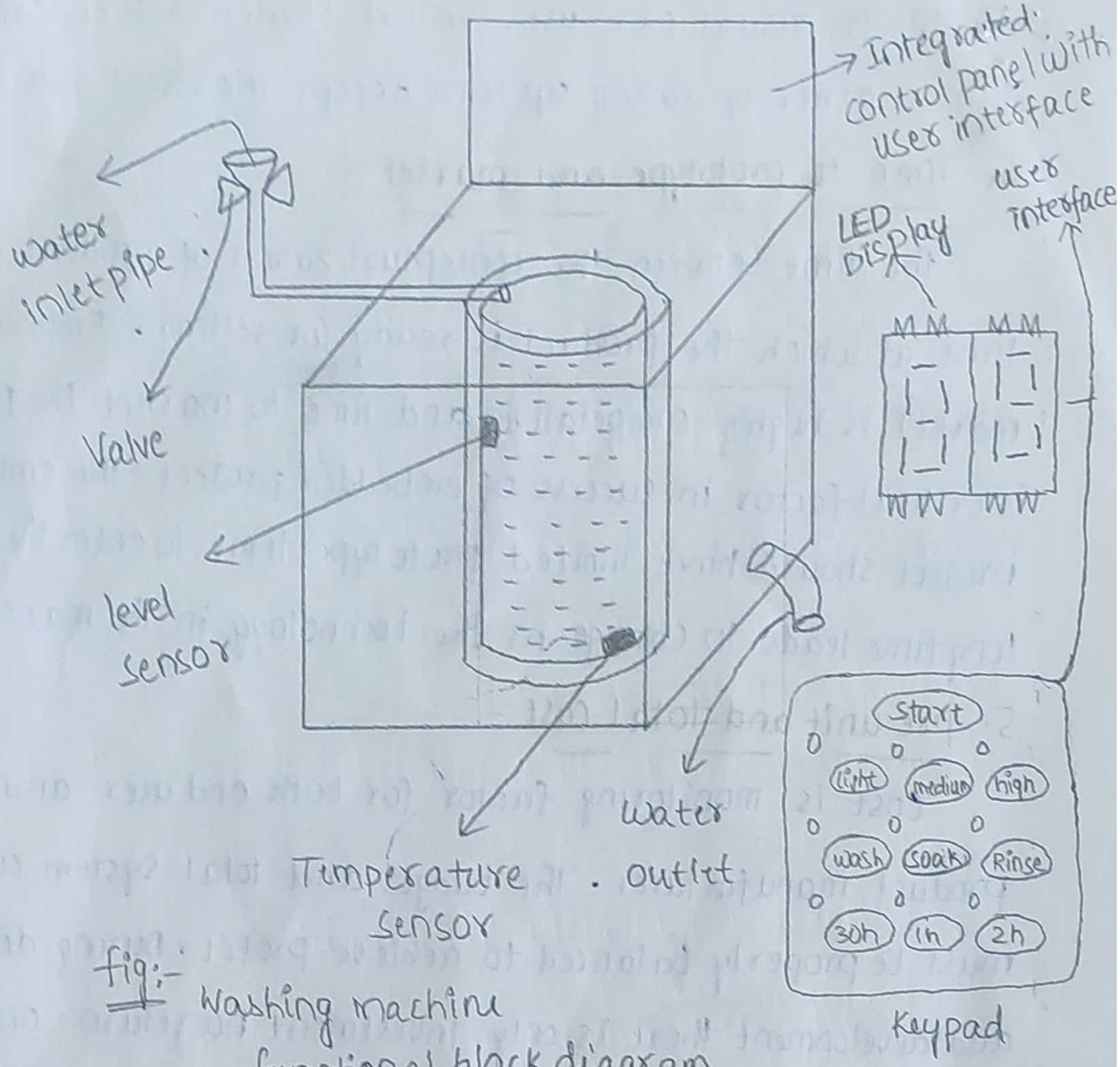

fig:- Washing machine functional block diagram

Actuators:-

A motor connected to agitator with a tub and water drawing pipe and inlet valve to control water flow are few actuator present in washing machine

Sensors:-

water temperature sensor, level sensors are few sensors present in the tub.

control unit:- A microprocessor / controller based board with interface to sensors and actuators. It also provides connectivity to user interfaces like keypad for setting washing machine time, select the type of material to be washed etc. user feed back is reflected through an LED connected to control board.

* washing machine comes in two models ① top loading ② front loading
* In toploading agitator of the machine twists back and pulls the cloths down to bottom of tub.
* on reaching the bottom of the tub the cloths work their way back to the top of tube repeats the same mechanism.
* In front loading machines, the close are tumbled & plunged into water over and over in first phase of washing.
* In second phase, water is pumped out and inner tube uses centrifugal force to rinse out water by spinning fastly.
* By selecting proper key on keyboard such as rinse, wash, spin the machine works according automated.

Automotive communication Buses:- (Domain specific example)

1. Controller Area Network (CAN):-

It supports medium speed (125 kbps) an high speed (1Mbps) data transfer. It is generally employed in safety systems like train engine control, Antilock break (ABS) systems, Navigation systems like GPS.

2. Local Inner connect network (LIN):-

It is single master multiple share communication interface. It is low speed, single wired interface with support of data rates upto 20kbps and is used in sensor/actuator interface. It is used in applications like mirror control, fan control, seat position control e.t.c--

3. Media-oriented system transport (MOST):-

It is targeted for automotive audio/video equipment interfacing used in european cars. It is optical fiber cable connected between the electrical optical converter (EOC) and optical electrical converter (OEC). It is multimedia fiber optic point to point network.

Keyplayers of Automotive embedded market:-

1. Silicon providers:- They provide necessary silicon chips which are used in control application development. The chip may be DSP controller (or) ADC/DAC chips.

2. Solution providers:- They provide complete solution for automotive applications by using chips, platforms and different development tools.

EX:- DENSO Automotive, Infosys technologies, Delphi e.t.c-

2. Local Inner connect network (LIN):-

It is single master multiple share communication interface. It is low speed, single wired interface with support of data rates upto 20kbps and is used in sensor/actuator interface. It is used in applications like mirror control, fan control, seat position control e.t.c..

3. Media-oriented system transport (MOST):-

It is targeted for automotive audio/video equipment interfacing used in european cars. It is optical fiber cable connected between the electrical optical converter (EOC) and optical electrical converter (OEC). It is multimedia fiber optic point to point network.

Keyplayers of Automotive embedded market:-

1. Silicon providers:- They provide necessary silicon chips which are used in control application development. The chip may be DSP controller (or) ADC/DAC chips.

2. Solution providers:- They provide complete solution for automotive applications by using chips, platforms and different development tools.

EX:- DENSO Automotive, Infosys technologies, Delphi e.t.c.